AUGER: SURFACE DETECTOR ELECTRONIC UPGRADE

VERSION: 1.12

DATE: 21/03/2016

BILL OF MATERIAL:X002-002-IE00-VA01

PIERRE
AUGER
OBSERVATORY

REF: /CAO-PROJETS/SPB16X/LAGORIO/AUGER/SDEU/IE00/

LPSC
53, AVENUE DES MARTYRS
38026 GRENOBLE CEDEX
+33 (0)4.76.28.41.65

ETUDE: SDEU
DESSIN: EL & JB
PAGE: 1/32
DATE: 22/03/2016

COVER PAGE

- COVER PAGE ... PAGE 1
- HIERARCHY ... PAGE 2
- TOP SCHEMATIC & RADIO, TANK, TRIGGERS, PMTS, GPS,POWER CONNECTORS ... PAGE 3
  - DDR2_FPGA : ZYNQ FPGA, LP-DDR2 MEMORY, STORAGE MEMORY & WATCHDOG
    - QSPI, JTAG,RESET,CLOCK, WATCHDOG, UART USB INTERFACE, FLASH MEMORY SLOW-CONTROL I2C, SYS UART, VCO SPI, FPGA BANK 0 & 500 ... PAGE 23
    - LP-DDR2, RADIO RS232 INTERFACE, FPGA BANK 501 & 502 ... PAGE 24
    - FPGA BANK 13, 33, 34 & 35 ... PAGE 25
  - FRONT END
    - 3X TWIN ADCS TYPE 1, 1X TWIN ADCS TYPE 2 & 1X TWIN ADCS TYPE 3 ... PAGE 14
      - TWIN ADCS TYPE 1 ... PAGE 18, 19 & 20
      - TWIN ADCS TYPE 2 ... PAGE 17
      - TWIN ADCS TYPE 3 ... PAGE 16
    - VOLTAGE REFERENCES ... PAGE 15
  - ETHERNET_USB-OTG ... PAGE 4
  - CLOCK_GENERATOR ... PAGE 6
  - SLOW_CONTROL : SLOW-CONTROL SYSTEM , PMTS, RADIO & TANK CONNECTORS
    - SLOW_CONTROL, MICRO-CONTROLLER ... PAGE 12
    - SLOW_CONTROL, ANALOG LEVELS ... PAGE 13
  - LED_CONTROLLER
    - MAIN SCHEMATIC ... PAGE 7
    - SPARE COMPONENTS ... PAGE 8
  - EXT_CONNECTORS ... PAGE 21 & 22
  - UART_USB : RS232 / USB INTERFACE ...PAGE 5 & 26
  - POWER_UUB
    - PROTECTION, RADIO & PMTS 12V ... PAGE 9
    - 1.2V, 1.8V, 3.3V, +3.3V & -3.3V ... PAGE 10
    - SLOW-CTRL 3.3V, 1V AND 5V ... PAGE 11
  - ESD_8 ... PAGE 27, 28 & 29
  - ESD_12 ... PAGE 30, 31 & 32

REF: /CAO-PROJETS/SPB16X/LAGORIO/AUGER/SDEU/IE00/

LPSC
53, AVENUE DES MARTYRS
38026 GRENOBLE CEDEX
+33 (0)4.76.28.41.65

ETUDE: SDEU

PAGE: 2/32

DESSIN: EL & JB

DATE: 22/03/2016

TOP SCHEMATIC
HIERARCHY VIEWER

I148
FRONT_END
I14
ethernet_usb-otg
ETHERNET
USB
POWERS
RADIO RS-232
FEM/FEM
PMT 1
U2
I114
LED_CONTROLER
U3
PMT 4
F/F_HD
PMT 2
I153
DDR2_FPGA
CLK GENERATOR
SLOW CTRL
ETHERNET
USB
GPS
RADIO
LED CONTROLLER
TRIGGERS
FRONT END
I116
SLOW_CONTROL
I2C SYS
LED ENABLE PPS
TANK
VOLTAGE MONITORING
CURRENT MONITORING
I15
UART_USB
U4
TANK
F/F_HD
PMT 3
M3
74lvc138
M5
SN74HC245PW
I-LOTUS GPS
(3.3V & 5V ANTENNA)
J2
CMS_BAR_DF_2X5
J3
BAR_DF_2X5
D.N.M
M4
MAX8556
ETE
J4
M80_2X7
PMT 5
J5
M80_2X7
PMT 6
POWER SUPPLY:
19 TO 32 V
SERIE713
J1
I115
POWER_UUB
I151
EXTENSION_CONNECTOR
I152
EXTENSION_CONNECTOR
I9
CLOCK_GENERATOR
GPS FIXATIONS
54.2MM
34.2
TROU320
MIRE100_300
PX1 TRIGGER OUT
PX2 TRIGGER IN
PRISE-SMA-JACK_COUD
SOT23
sn74lvc1g17
U1

REF: /CAO-PROJETS/SPB16X/LAGORIO/AUGER/SDEU/IE00/

LPSC
53, AVENUE DES MARTYRS
38026 GRENOBLE CEDEX
+33 (0)4.76.28.41.65

ETUDE: SDEU		PAGE: 3/32	
DESSIN:	EL & JB	DATE:	12/03/2015
	TOP SCHEMATIC		

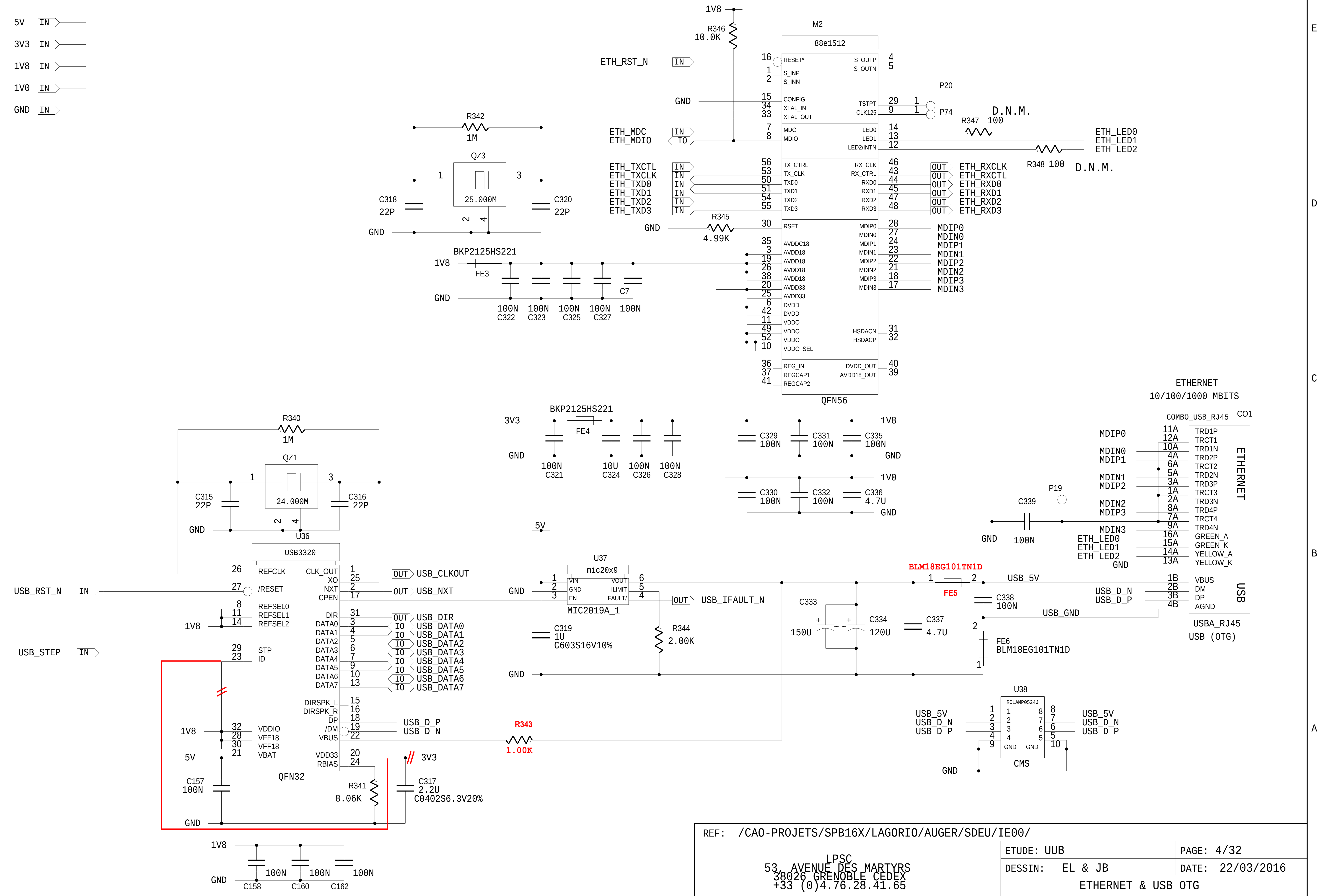
5V IN
3V3 IN
1V8 IN
1V0 IN
GND IN
M2
88e1512
QFN56
RESET*
S_INP
S_INN
S_OUTP
S_OUTN
CONFIG
XTAL_IN
XTAL_OUT
TSTPT
CLK125
P20
P74
D.N.M.
R347 100
R348 100
R346 10.0K
ETH_RST_N
R342 1M
QZ3 25.000M
C318 22P
C320 22P
MDC
MDIO
ETH_MDC
ETH_MDIO
LED0
LED1
LED2/INTN
ETH_LED0
ETH_LED1
ETH_LED2
TX_CTRL
TX_CLK
TXD0
TXD1
TXD2
TXD3
ETH_TXCTL
ETH_TXCLK
ETH_TXD0
ETH_TXD1
ETH_TXD2
ETH_TXD3
RX_CLK
RX_CTRL
RXD0
RXD1
RXD2
RXD3
ETH_RXCLK
ETH_RXCTL
ETH_RXD0
ETH_RXD1
ETH_RXD2
ETH_RXD3
RSET
R345 4.99K
MDIP0
MDIN0
MDIP1
MDIN1
MDIP2
MDIN2
MDIP3
MDIN3
AVDDC18
AVDD18
AVDD33
DVDD
VDDO
VDDO_SEL
HSDACN
HSDACP
REG_IN
REGCAP1
REGCAP2
DVDD_OUT
AVDD18_OUT
BKP2125HS221
FE3
C322 100N
C323 100N
C325 100N
C327 100N
C7 100N
FE4
C321 100N
C324 10U
C326 100N
C328 100N
C329 100N
C331 100N
C335 100N
C330 100N
C332 100N
C336 4.7U
ETHERNET
10/100/1000 MBITS
COMBO_USB_RJ45
CO1
TRD1P
TRCT1
TRD1N
TRD2P
TRCT2
TRD2N
TRD3P
TRCT3
TRD3N
TRD4P
TRCT4
TRD4N
GREEN_A
GREEN_K
YELLOW_A
YELLOW_K
VBUS
DM
DP
AGND
USBA_RJ45
USB (OTG)
P19
C339 100N
R340 1M
QZ1 24.000M
C315 22P
C316 22P
U36
USB3320
QFN32
REFCLK
/RESET
REFSEL0
REFSEL1
REFSEL2
STP
ID
VDDIO
VFF18
VFF18
VBAT
CLK_OUT
XO
NXT
CPEN
DIR
DATA0
DATA1
DATA2
DATA3
DATA4
DATA5
DATA6
DATA7
DIRSPK_L
DIRSPK_R
DP
/DM
VBUS
VDD33
RBIAS
USB_RST_N
USB_STEP
USB_CLKOUT
USB_NXT
USB_DIR
USB_DATA0
USB_DATA1
USB_DATA2
USB_DATA3
USB_DATA4
USB_DATA5
USB_DATA6
USB_DATA7
USB_D_P
USB_D_N
R343 1.00K
R341 8.06K
C317 2.2U C0402S6.3V20%
C157 100N
C158 100N
C160 100N
C162 100N
U37
mic20x9
MIC2019A_1
VIN
GND
EN
VOUT
ILIMIT
FAULT/
USB_IFAULT_N
C319 1U C603S16V10%
R344 2.00K
C333 150U
C334 120U
C337 4.7U
BLM18EG101TN1D
FE5
FE6
C338 100N
USB_5V
USB_GND
U38
RCLAMP0524J
CMS

REF: /CAO-PROJETS/SPB16X/LAGORIO/AUGER/SDEU/IE00/

LPSC
53, AVENUE DES MARTYRS
38026 GRENOBLE CEDEX
+33 (0)4.76.28.41.65

ETUDE: UUB
PAGE: 4/32
DESSIN: EL & JB
DATE: 22/03/2016
ETHERNET & USB OTG

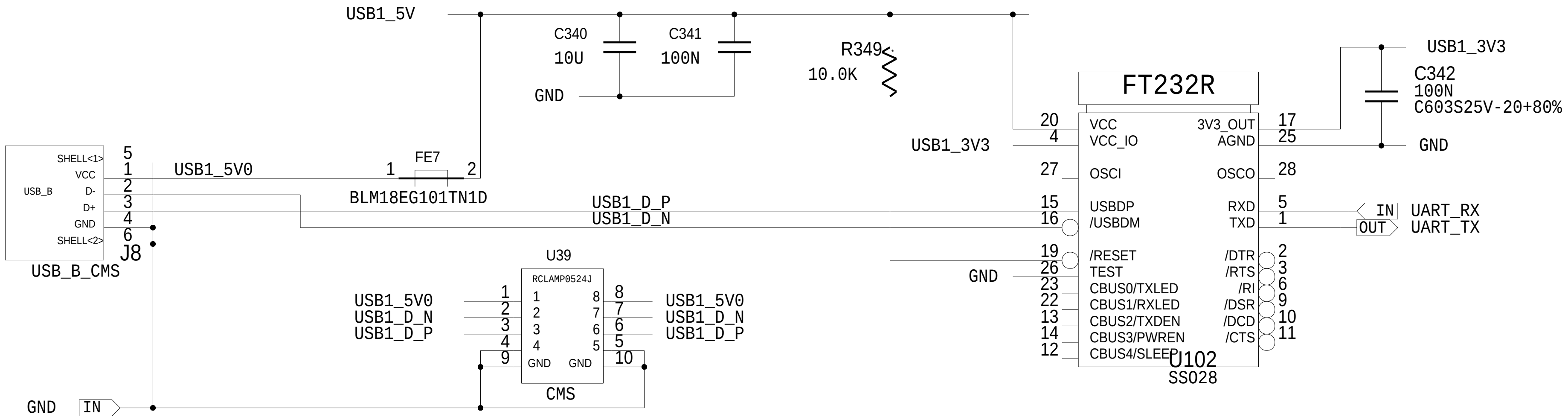
USB1_5V
C340
10U
C341
100N
GND
R349
10.0K
USB1_3V3
FT232R
C342
100N
C603S25V-20+80%
GND
SHELL<1>
VCC
USB_B
D-
D+
GND
SHELL<2>
J8
USB_B_CMS
USB1_5V0
FE7
BLM18EG101TN1D
USB1_D_P
USB1_D_N
USB1_3V3
20 VCC
4 VCC_IO
27 OSCI
15 USBDP
16 /USBDM
19 /RESET
26 TEST
23 CBUS0/TXLED
22 CBUS1/RXLED
13 CBUS2/TXDEN
14 CBUS3/PWREN
12 CBUS4/SLEEP
3V3_OUT 17
AGND 25
OSCO 28
RXD 5
TXD 1
/DTR 2
/RTS 3
/RI 6
/DSR 9
/DCD 10
/CTS 11
U102
SSO28
GND
IN UART_RX
OUT UART_TX
U39
RCLAMP0524J
USB1_5V0
USB1_D_N
USB1_D_P
GND
CMS
GND IN

REF: /CAO-PROJETS/SPB16X/LAGORIO/AUGER/SDEU/IE00/

LPSC
53, AVENUE DES MARTYRS
38026 GRENOBLE CEDEX
+33 (0)4.76.28.41.65

ETUDE: SDEU
PAGE: 5/32
DESSIN: EL & JB
DATE: 17/03/2015

UART / USB

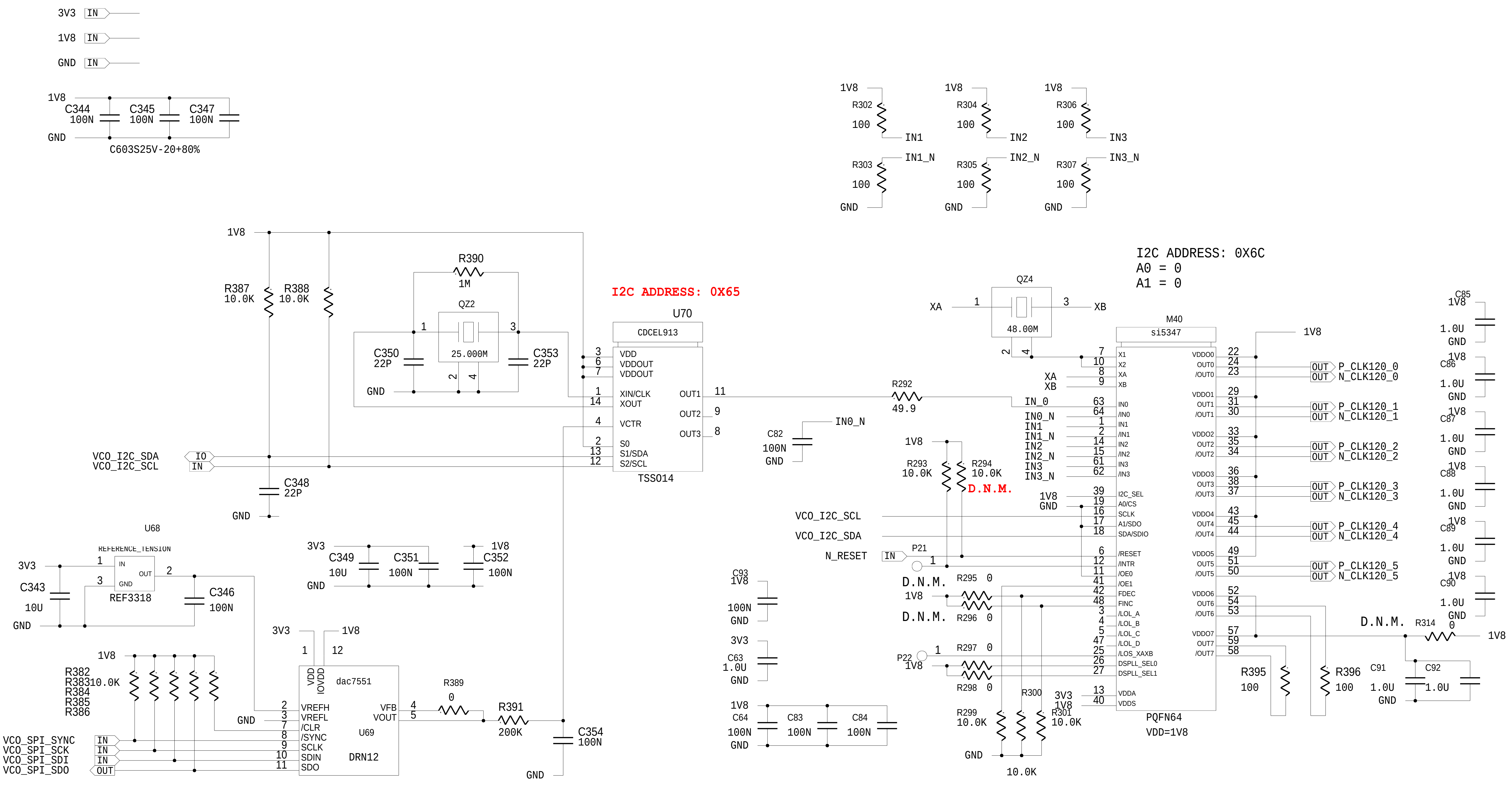
3V3 IN
1V8 IN
GND IN
1V8
C344 100N
C345 100N
C347 100N
GND
C603S25V-20+80%
1V8 R302 100 IN1
1V8 R304 100 IN2
1V8 R306 100 IN3
IN1_N R303 100 GND
IN2_N R305 100 GND
IN3_N R307 100 GND
I2C ADDRESS: 0X6C
A0 = 0
A1 = 0
1V8
R387 10.0K
R388 10.0K
R390 1M
QZ2 25.000M
C350 22P
C353 22P
GND
I2C ADDRESS: 0X65
U70
CDCEL913
VDD
VDDOUT
VDDOUT
XIN/CLK
XOUT
VCTR
S0
S1/SDA
S2/SCL
OUT1
OUT2
OUT3
TSSO14
VCO_I2C_SDA IO
VCO_I2C_SCL IN
C348 22P
GND
QZ4 48.00M
XA
XB
R292 49.9
C82 100N GND
IN0_N
M40
si5347
X1 X2 XA XB
IN0 /IN0 IN1 /IN1 IN2 /IN2 IN3 /IN3
I2C_SEL A0/CS SCLK A1/SDO SDA/SDIO
/RESET /INTR /OE0 /OE1 FDEC FINC
/LOL_A /LOL_B /LOL_C /LOL_D /LOS_XAXB
DSPLL_SEL0 DSPLL_SEL1
VDDA VDDS
VDDO0 OUT0 /OUT0 ... VDDO7 OUT7 /OUT7
PQFN64
VDD=1V8
IN_0 IN0_N IN1 IN1_N IN2 IN2_N IN3 IN3_N
R293 10.0K
R294 10.0K
D.N.M.
VCO_I2C_SCL
VCO_I2C_SDA
N_RESET IN P21
R295 0
R296 0
R297 0
R298 0
P22
R299 10.0K
R300
R301 10.0K
10.0K
GND
C93 1V8 100N GND
C63 3V3 1.0U GND
C64 100N
C83 100N
C84 100N
1V8
OUT P_CLK120_0
OUT N_CLK120_0
OUT P_CLK120_1
OUT N_CLK120_1
OUT P_CLK120_2
OUT N_CLK120_2
OUT P_CLK120_3
OUT N_CLK120_3
OUT P_CLK120_4
OUT N_CLK120_4
OUT P_CLK120_5
OUT N_CLK120_5
C85 C86 C87 C88 C89 C90 1V8 1.0U GND
R395 100
R396 100
D.N.M. R314 0 1V8
C91 1.0U
C92 1.0U
GND
U68
REFERENCE_TENSION
REF3318
IN OUT GND
3V3
C343 10U
GND
C346 100N
C349 10U
C351 100N
1V8
C352 100N
3V3
GND
U69
dac7551
DRN12
VDD IOVDD
VREFH VREFL /CLR /SYNC SCLK SDIN SDO
VFB VOUT
R389 0
R391 200K
C354 100N
GND
1V8
R382
R383 10.0K
R384
R385
R386
VCO_SPI_SYNC IN
VCO_SPI_SCK IN
VCO_SPI_SDI IN
VCO_SPI_SDO OUT

REF: /CAO-PROJETS/SPB16X/LAGORIO/AUGER/SDEU/IE00/

LPSC
53, AVENUE DES MARTYRS
38026 GRENOBLE CEDEX
+33 (0)4.76.28.41.65

ETUDE: SDEU
PAGE: 6/32
DESSIN: EL & JB
DATE: 22/03/2016

CLOCK_GENERATOR

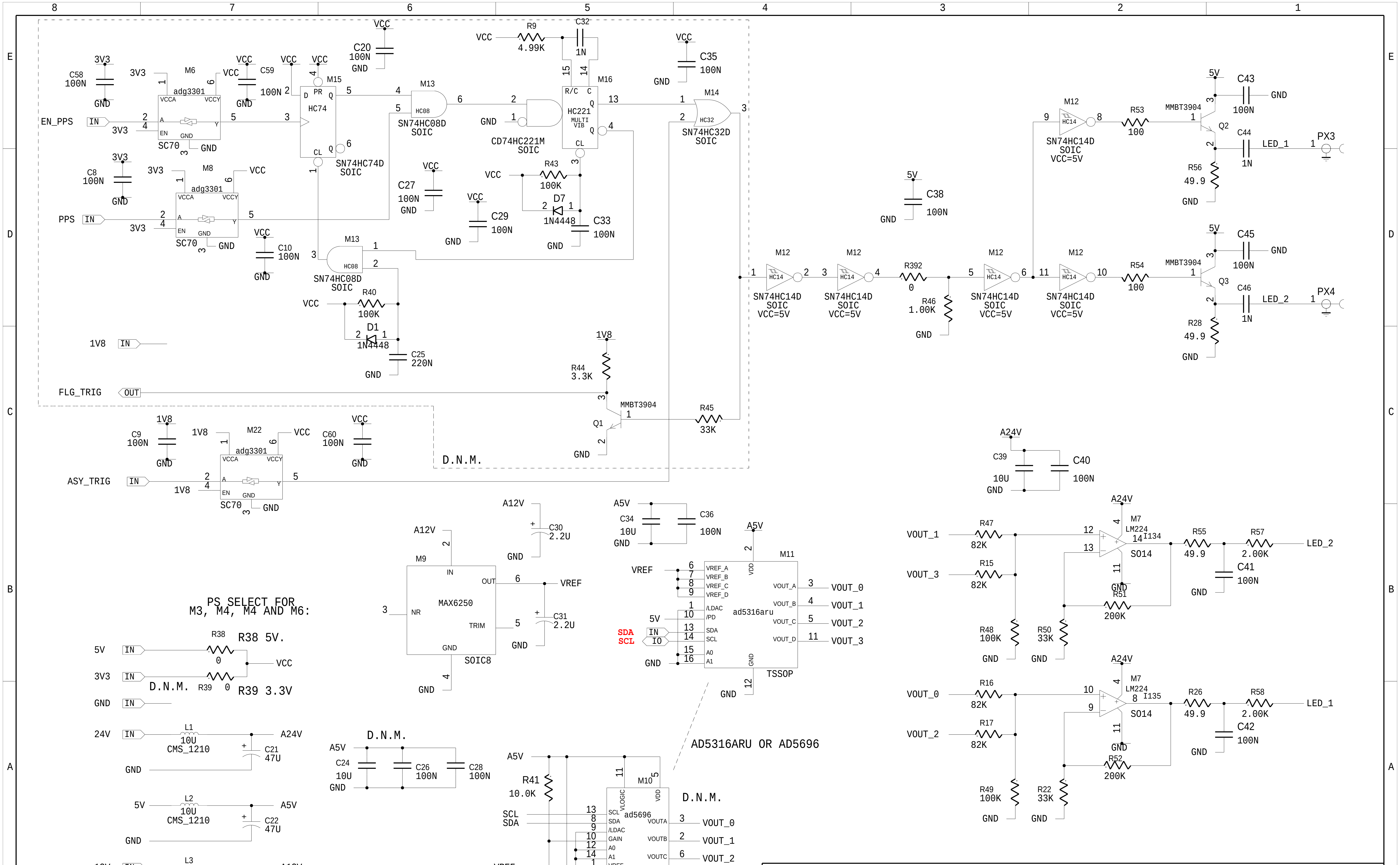
8
7
6
5
4
3
2
1
E
D
C
B
A
EN_PPS
PPS
1V8
FLG_TRIG
ASY_TRIG
IN
OUT
3V3
VCC
GND
C58 100N
C8 100N
C59 100N
C10 100N
C20 100N
C27 100N
C29 100N
C33 100N
C35 100N
C25 220N
C32 1N
R9 4.99K
R43 100K
R40 100K
R44 3.3K
R45 33K
D7 1N4448
D1 1N4448
M6 adg3301 SC70
M8 adg3301 SC70
M22 adg3301 SC70
M15 HC74 SN74HC74D SOIC
M13 HC08 SN74HC08D SOIC
M16 HC221 CD74HC221M SOIC
M14 HC32 SN74HC32D SOIC
Q1 MMBT3904
D.N.M.
5V
M12 HC14 SN74HC14D SOIC VCC=5V
R392 0
R46 1.00K
R53 100
R54 100
Q2 MMBT3904
Q3 MMBT3904
C43 100N
C45 100N
C44 1N
C46 1N
R56 49.9
R28 49.9
C38 100N
LED_1
LED_2
PX3
PX4
A24V
C39 10U
C40 100N
VOUT_0
VOUT_1
VOUT_2
VOUT_3
R47 82K
R15 82K
R16 82K
R17 82K
R48 100K
R49 100K
R50 33K
R22 33K
R51 200K
R52 200K
M7 LM224 S014
I134
I135
R55 49.9
R26 49.9
R57 2.00K
R58 2.00K
C41 100N
C42 100N
A12V
C30 2.2U
C31 2.2U
M9 MAX6250 SOIC8
IN
OUT
NR
TRIM
VREF
A5V
C34 10U
C36 100N
M11 ad5316aru TSSOP
VREF_A
VREF_B
VREF_C
VREF_D
/LDAC
/PD
SDA
SCL
A0
A1
VOUT_A
VOUT_B
VOUT_C
VOUT_D
VDD
IO
AD5316ARU OR AD5696
M10 ad5696 TSS016
VLOGIC
/RESET
RSTSEL
GAIN
R41 10.0K
R42 0
D.N.M.
C24 10U
C26 100N
C28 100N
GAIN SELEC.:
R??? D.N.M.: GAIN = 2X VREF
PS SELECT FOR
M3, M4, M4 AND M6:
R38 0
R38 5V.
R39 0
R39 3.3V
24V
12V
L1 10U CMS_1210
L2 10U CMS_1210
L3 10U CMS_1210
C21 47U
C22 47U
C23 47U
C9 100N
C60 100N

REF: /CAO-PROJETS/SPB16X/LAGORIO/AUGER/SDEU/IE00/

LPSC
53, AVENUE DES MARTYRS
38026 GRENOBLE CEDEX
+33 (0)4.76.28.41.65

ETUDE: SDEU	PAGE: 7/32
DESSIN: L. LATRONICO	DATE: 24/03/2016

LED CONTROLLER
MAIN SCHEMATIC

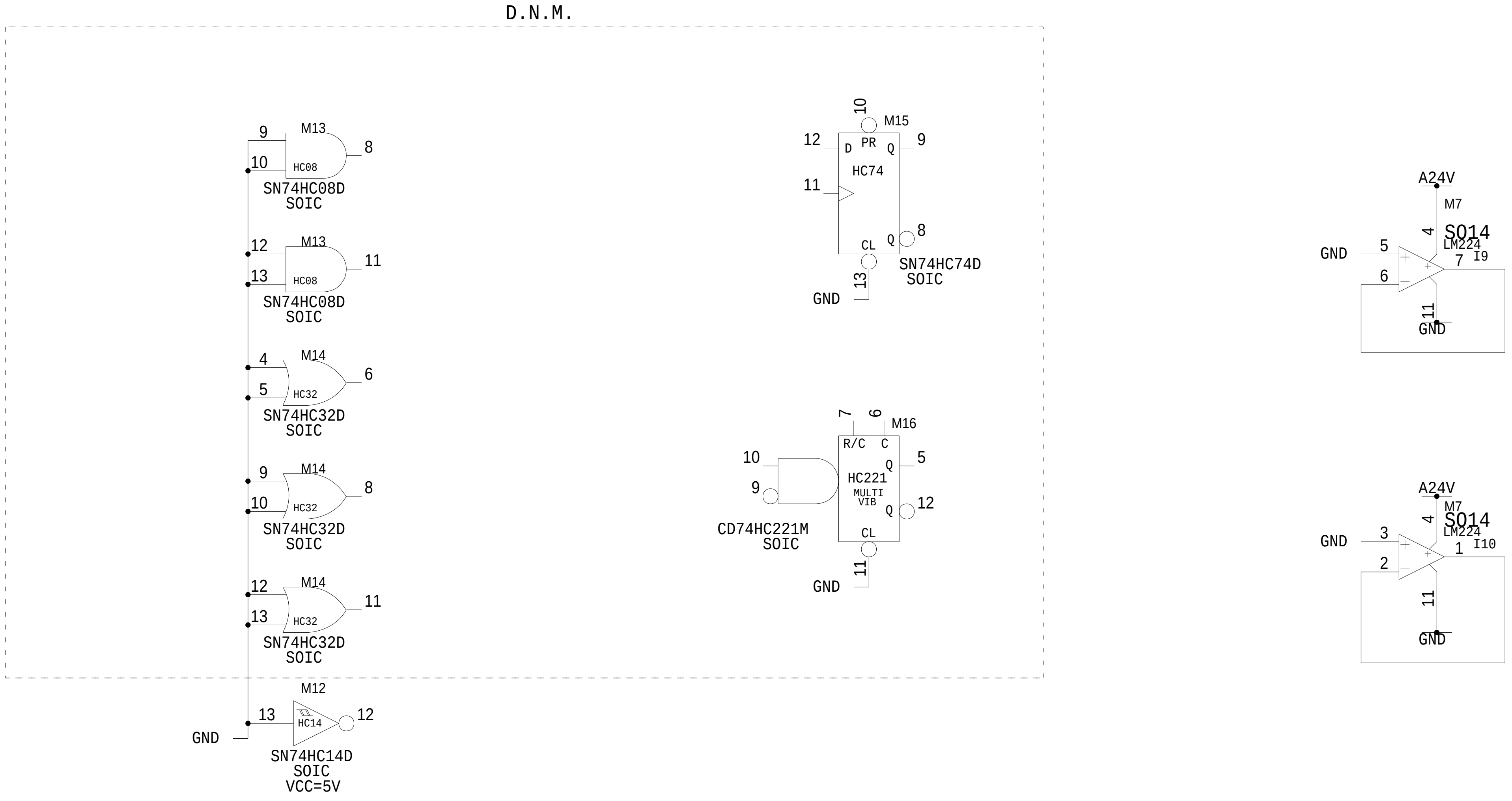
D.N.M.
M13
9
10
8
HC08
SN74HC08D
SOIC
M13
12
13
11
HC08
SN74HC08D
SOIC
M14
4
5
6
HC32
SN74HC32D
SOIC
M14
9
10
8
HC32
SN74HC32D
SOIC
M14
12
13
11
HC32
SN74HC32D
SOIC
M12
13
HC14
12
GND
SN74HC14D
SOIC
VCC=5V
10
M15
12
D
PR
Q
9
HC74
11
8
Q
CL
13
GND
SN74HC74D
SOIC
7
6
M16
R/C
C
Q
5
10
HC221
9
MULTI
VIB
Q
12
CL
CD74HC221M
SOIC
11
GND
A24V
M7
4
SO14
LM224
I9
GND
5
7
6
11
GND
A24V
M7
4
SO14
LM224
I10
GND
3
1
2
11
GND

REF: /CAO-PROJETS/SPB16X/LAGORIO/AUGER/SDEU/IE00/

LPSC
53, AVENUE DES MARTYRS
38026 GRENOBLE CEDEX
+33 (0)4.76.28.41.65

ETUDE: SDEU
PAGE: 8/32
DESSIN: L. LATRONICO
DATE: 22/03/2016

LED CONTROLLER
SPARE COMPONENETS

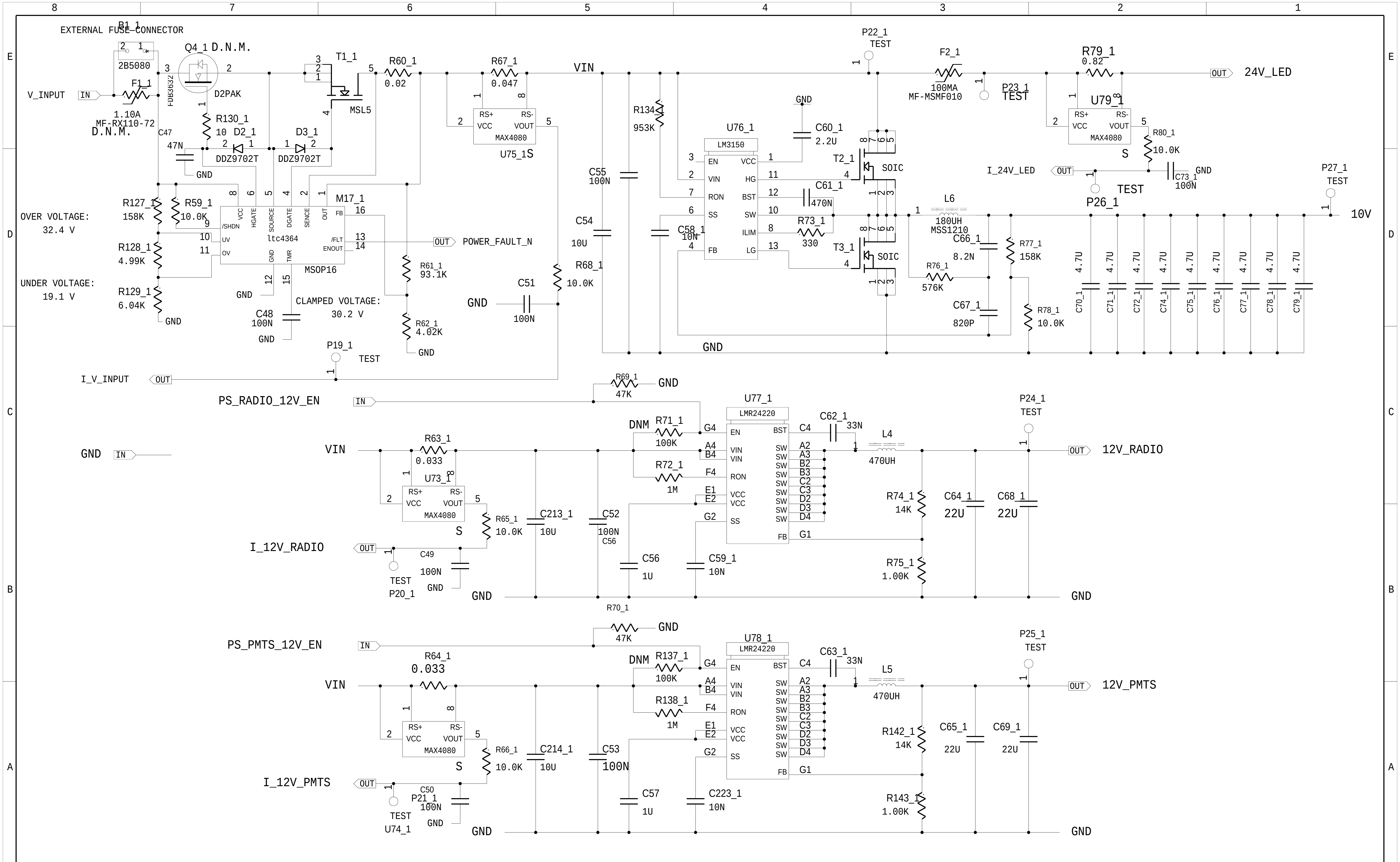
EXTERNAL FUSE CONNECTOR
B1_1
2B5080
V_INPUT
IN
F1_1
1.10A
MF-RX110-72
D.N.M.
Q4_1 D.N.M.
FDB3632
D2PAK
C47
47N
GND
R130_1
10
D2_1
DDZ9702T
D3_1
DDZ9702T
T1_1
MSL5
R60_1
0.02
R67_1
0.047
MAX4080
U75_1
S
RS+
RS-
VCC
VOUT
VIN
R127_1
158K
R59_1
10.0K
OVER VOLTAGE:
32.4 V
R128_1
4.99K
UNDER VOLTAGE:
19.1 V
R129_1
6.04K
M17_1
ltc4364
MSOP16
VCC
HGATE
SOURCE
DGATE
SENCE
OUT
FB
/SHDN
UV
OV
/FLT
ENOUT
GND
TMR
POWER_FAULT_N
OUT
R61_1
93.1K
R62_1
4.02K
C48
100N
CLAMPED VOLTAGE:
30.2 V
C51
100N
R68_1
10.0K
P19_1
TEST
I_V_INPUT
C55
100N
C54
10U
R134_1
953K
C58_1
10N
U76_1
LM3150
EN
VCC
VIN
HG
RON
BST
SS
SW
ILIM
FB
LG
C60_1
2.2U
C61_1
470N
R73_1
330
T2_1
SOIC
T3_1
SOIC
P22_1
TEST
F2_1
100MA
MF-MSMF010
P23_1
TEST
R79_1
0.82
U79_1
24V_LED
I_24V_LED
R80_1
10.0K
C73_1
100N
P26_1
TEST
P27_1
TEST
10V
L6
180UH
MSS1210
C66_1
8.2N
R76_1
576K
R77_1
158K
C67_1
820P
R78_1
10.0K
C70_1 C71_1 C72_1 C74_1 C75_1 C76_1 C77_1 C78_1 C79_1
4.7U
R69_1
47K
PS_RADIO_12V_EN
U77_1
LMR24220
DNM
R71_1
100K
R72_1
1M
EN
BST
SW
RON
VCC
SS
FB
C62_1
33N
L4
470UH
P24_1
TEST
12V_RADIO
R63_1
0.033
U73_1
R65_1
10.0K
C213_1
10U
C52
100N
C56
1U
C59_1
10N
R74_1
14K
R75_1
1.00K
C64_1
22U
C68_1
22U
I_12V_RADIO
C49
100N
TEST
P20_1
R70_1
47K
PS_PMTS_12V_EN
U78_1
R137_1
100K
R138_1
1M
C63_1
33N
L5
470UH
P25_1
TEST
12V_PMTS
R64_1
0.033
R66_1
10.0K
C214_1
10U
C53
100N
C57
1U
C223_1
10N
R142_1
14K
R143_1
1.00K
C65_1
22U
C69_1
22U
I_12V_PMTS
C50
P21_1
100N
TEST
U74_1
GND

REF: /CAO-PROJETS/SPB16X/LAGORIO/AUGER/SDEU/IE00/

LPSC
53, AVENUE DES MARTYRS
38026 GRENOBLE CEDEX
+33 (0)4.76.28.41.65

ETUDE: SDEU	PAGE: 9/32
DESSIN: EL & JB	DATE: 22/03/2016

POWER SUPPLIES
PROTECTION, RADIO & PMTS 12V

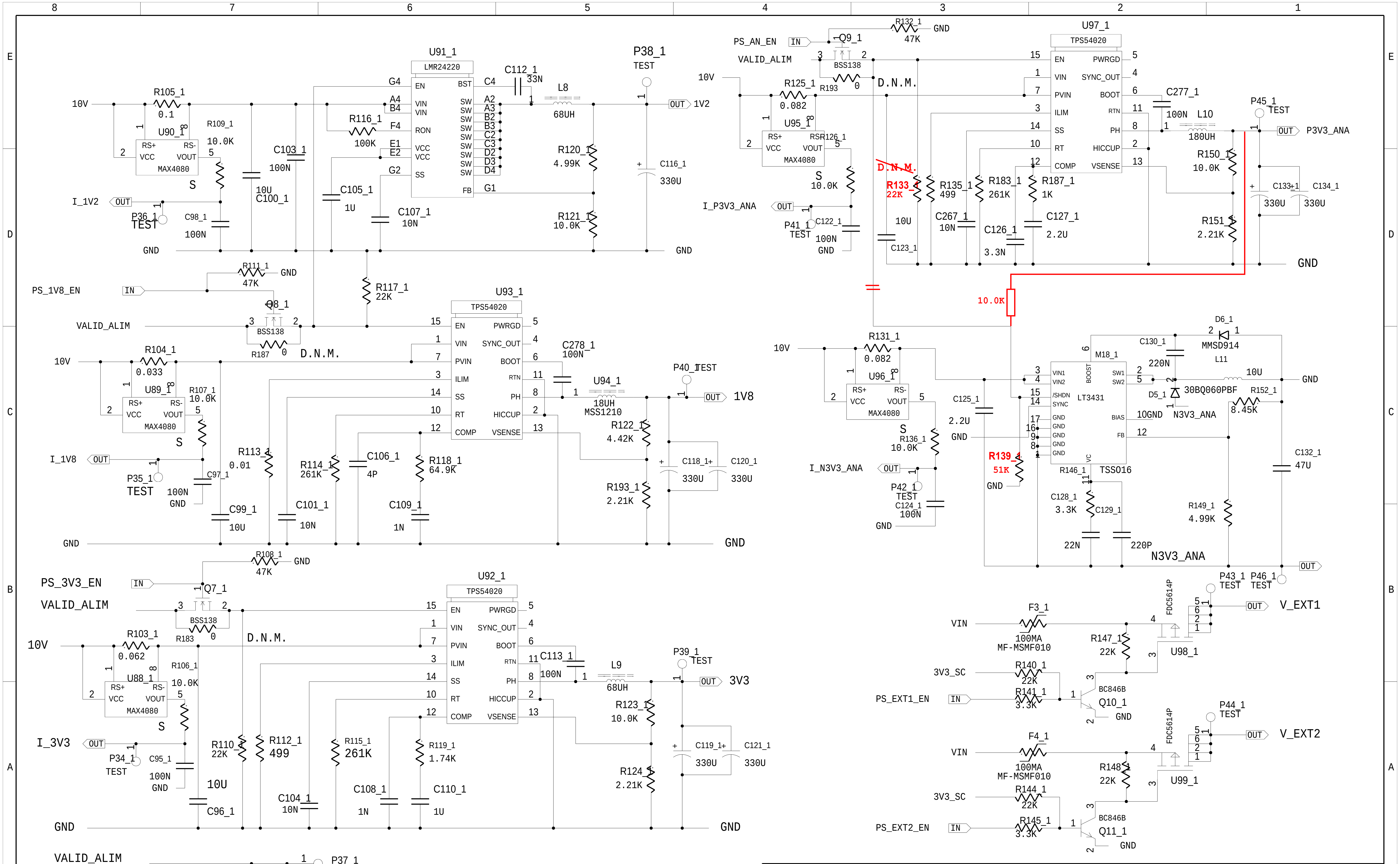
U91_1
LMR24220
EN
VIN
RON
VCC
SS
BST
SW
FB
G4
A4
B4
F4
E1
E2
G2
C4
A2
A3
B2
B3
C2
C3
D2
D3
D4
G1
C112_1
33N
L8
68UH
P38_1
TEST
OUT
1V2
10V
R105_1
0.1
U90_1
MAX4080
RS+
RS-
VCC
VOUT
R109_1
10.0K
C103_1
100N
10U
C100_1
R116_1
100K
C105_1
1U
C107_1
10N
R120_1
4.99K
R121_1
10.0K
C116_1
330U
I_1V2
P36_1
TEST
C98_1
100N
GND
PS_1V8_EN
IN
R111_1
47K
R117_1
22K
Q8_1
BSS138
VALID_ALIM
R187
0
D.N.M.
U93_1
TPS54020
EN
VIN
PVIN
ILIM
SS
RT
COMP
PWRGD
SYNC_OUT
BOOT
RTN
PH
HICCUP
VSENSE
C278_1
100N
U94_1
18UH
MSS1210
P40_1
TEST
1V8
R104_1
0.033
U89_1
R107_1
10.0K
I_1V8
P35_1
TEST
C97_1
100N
R113_1
0.01
R114_1
261K
C106_1
4P
R118_1
64.9K
R122_1
4.42K
C118_1
C120_1
330U
R193_1
2.21K
C99_1
10U
C101_1
10N
C109_1
1N
R108_1
47K
PS_3V3_EN
Q7_1
R183
U92_1
R103_1
0.062
U88_1
R106_1
10.0K
I_3V3
P34_1
C95_1
100N
C96_1
10U
R110_1
22K
R112_1
499
R115_1
261K
R119_1
1.74K
C104_1
10N
C108_1
1N
C110_1
1U
C113_1
100N
L9
68UH
P39_1
TEST
3V3
R123_1
10.0K
R124_1
2.21K
C119_1
C121_1
330U
P37_1
TEST
D4_1
MBRS140
C102_1
10N
PS_AN_EN
R132_1
47K
Q9_1
BSS138
R193
R125_1
0.082
U95_1
R126_1
10.0K
I_P3V3_ANA
P41_1
TEST
C122_1
100N
U97_1
TPS54020
C277_1
100N
L10
180UH
P45_1
TEST
P3V3_ANA
R150_1
10.0K
R151_1
2.21K
C133_1
C134_1
330U
R133_1
22K
R135_1
499
R183_1
261K
R187_1
1K
C123_1
10U
C267_1
10N
C126_1
3.3N
C127_1
2.2U
10.0K
R131_1
0.082
U96_1
R136_1
10.0K
I_N3V3_ANA
P42_1
TEST
C124_1
100N
C125_1
2.2U
M18_1
LT3431
VIN1
VIN2
/SHDN
SYNC
BOOST
SW1
SW2
BIAS
FB
VC
TSSO16
C130_1
220N
D6_1
MMSD914
L11
10U
D5_1
30BQ060PBF
R152_1
8.45K
N3V3_ANA
R139_1
51K
R146_1
C128_1
3.3K
C129_1
22N
220P
R149_1
4.99K
C132_1
47U
P43_1
TEST
P46_1
TEST
V_EXT1
VIN
F3_1
100MA
MF-MSMF010
FDC5614P
U98_1
R147_1
22K
3V3_SC
R140_1
22K
PS_EXT1_EN
R141_1
3.3K
BC846B
Q10_1
P44_1
TEST
V_EXT2
F4_1
100MA
MF-MSMF010
U99_1
R148_1
22K
R144_1
22K
PS_EXT2_EN
R145_1
3.3K
Q11_1

REF: /CAO-PROJETS/SPB16X/LAGORIO/AUGER/SDEU/IE00/

LPSC
53, AVENUE DES MARTYRS
38026 GRENOBLE CEDEX
+33 (0)4.76.28.41.65

ETUDE: SDEU
DESSIN: EL & JB
PAGE: 10/32
DATE: 22/03/2015

POWER SUPPLIES
1.2V, 1.8V, 3.3V, +3.3V & -3.3V

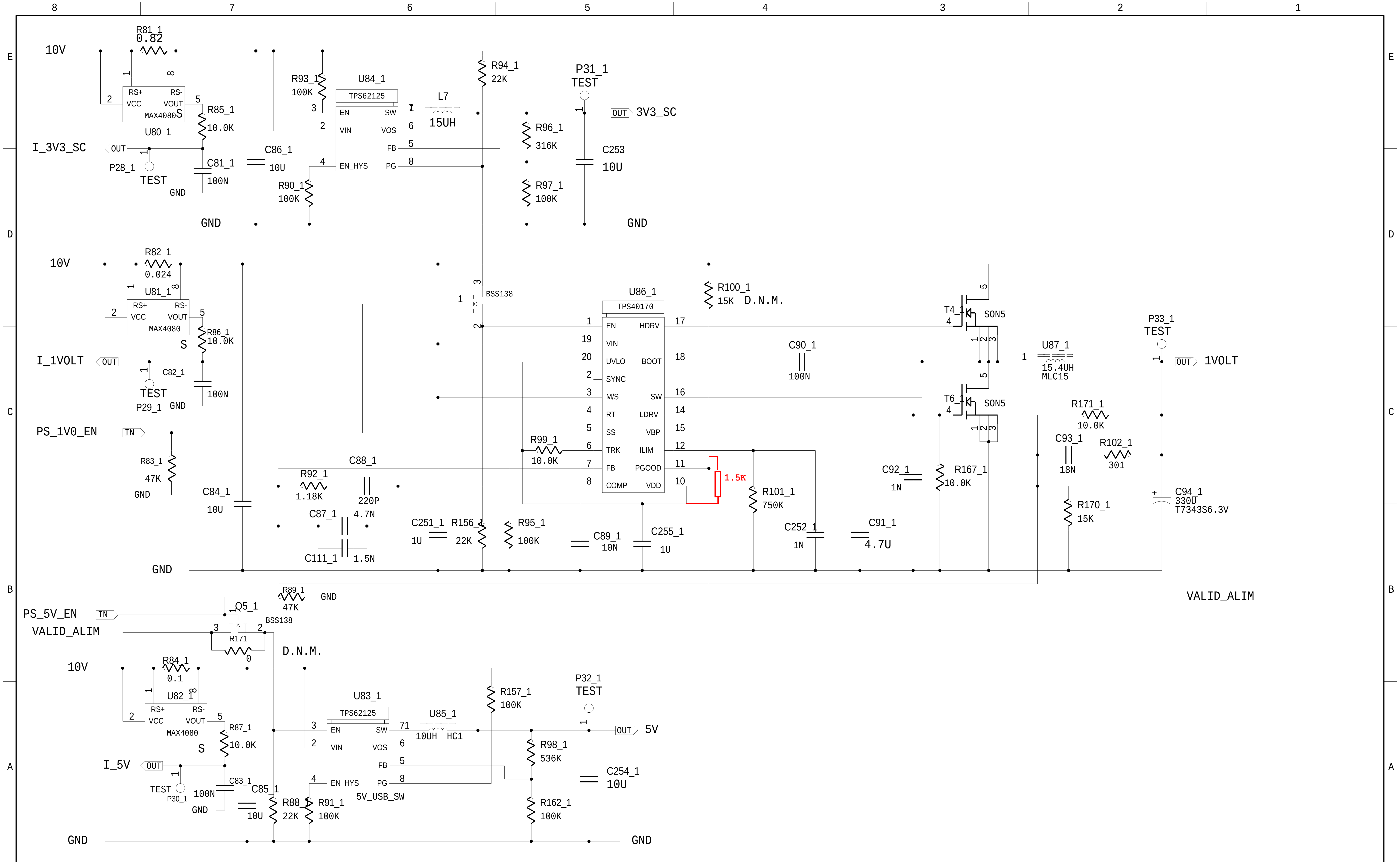
8
7
6
5
4
3
2
1
E
D
C
B
A
10V
R81_1
0.82
U80_1
MAX4080S
RS+
RS-
VCC
VOUT
R85_1
10.0K
I_3V3_SC
OUT
P28_1
TEST
C81_1
100N
GND
C86_1
10U
R93_1
100K
U84_1
TPS62125
EN
SW
VIN
VOS
FB
EN_HYS
PG
L7
15UH
R90_1
100K
R94_1
22K
R96_1
316K
R97_1
100K
P31_1
TEST
3V3_SC
C253
10U
GND
R82_1
0.024
U81_1
MAX4080
S
R86_1
10.0K
I_1VOLT
C82_1
100N
TEST
P29_1
PS_1V0_EN
IN
R83_1
47K
C84_1
10U
BSS138
U86_1
TPS40170
EN
HDRV
VIN
UVLO
BOOT
SYNC
M/S
SW
RT
LDRV
SS
VBP
TRK
ILIM
FB
PGOOD
COMP
VDD
R100_1
15K
D.N.M.
T4_1
SON5
T6_1
SON5
C90_1
100N
U87_1
15.4UH
MLC15
P33_1
TEST
1VOLT
R171_1
10.0K
C93_1
18N
R102_1
301
R99_1
10.0K
R92_1
1.18K
C88_1
220P
C87_1
4.7N
C111_1
1.5N
C251_1
1U
R156_1
22K
R95_1
100K
C89_1
10N
C255_1
1U
1.5K
R101_1
750K
C252_1
1N
C91_1
4.7U
C92_1
1N
R167_1
10.0K
R170_1
15K
C94_1
330U
T7343S6.3V
VALID_ALIM
R89_1
47K
Q5_1
BSS138
PS_5V_EN
VALID_ALIM
R171
0
D.N.M.
10V
R84_1
0.1
U82_1
MAX4080
S
R87_1
10.0K
I_5V
TEST
P30_1
C83_1
100N
C85_1
10U
R88_1
22K
R91_1
100K
U83_1
TPS62125
5V_USB_SW
U85_1
10UH HC1
R157_1
100K
P32_1
TEST
5V
R98_1
536K
R162_1
100K
C254_1
10U
GND

REF: /CAO-PROJETS/SPB16X/LAGORIO/AUGER/SDEU/IE00/

LPSC
53, AVENUE DES MARTYRS
38026 GRENOBLE CEDEX
+33 (0)4.76.28.41.65

ETUDE: SDEU
PAGE: 11/32
DESSIN: EL & JB
DATE: 22/03/2015

POWER SUPPLIES
SLOW-CTRL 3.3V, 1V AND 5V

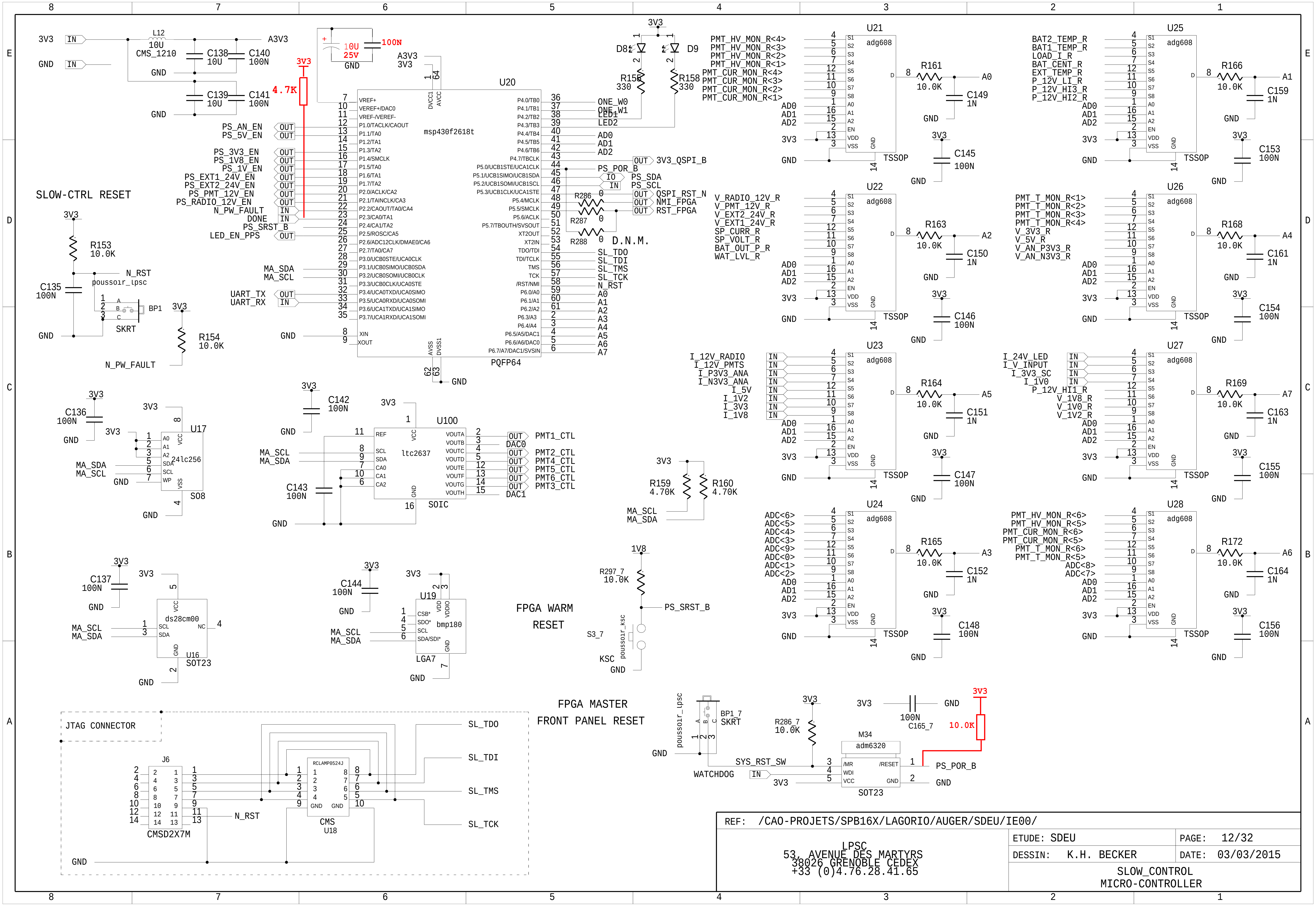
8
7
6
5
4
3
2
1
E
D
C
B
A
3V3
IN
GND
L12
10U
CMS_1210
A3V3
C138
10U
C140
100N
C139
10U
C141
100N
10U
25V
100N
A3V3
3V3
3V3
4.7K
U20
msp430f2618t
PQFP64
DVCC1
AVCC
AVSS
DVSS1
VREF+
VEREF+/DAC0
VREF-/VEREF-
PS_AN_EN
PS_5V_EN
PS_3V3_EN
PS_1V8_EN
PS_1V_EN
PS_EXT1_24V_EN
PS_EXT2_24V_EN
PS_PMT_12V_EN
PS_RADIO_12V_EN
N_PW_FAULT
DONE
PS_SRST_B
LED_EN_PPS
OUT
MA_SDA
MA_SCL
UART_TX
UART_RX
XIN
XOUT
ONE_W0
ONE_W1
LED1
LED2
AD0
AD1
AD2
3V3_QSPI_B
PS_POR_B
PS_SDA
PS_SCL
QSPI_RST_N
NMI_FPGA
RST_FPGA
R286
R287
R288
D.N.M.
SL_TDO
SL_TDI
SL_TMS
SL_TCK
N_RST
A0
A1
A2
A3
A4
A5
A6
A7
D8
D9
R156
330
R158
330
SLOW-CTRL RESET
R153
10.0K
C135
100N
poussoir_lpsc
BP1
SKRT
R154
10.0K
C136
100N
U17
24lc256
SO8
C137
100N
U16
ds28cm00
SOT23
C142
100N
U100
ltc2637
SOIC
REF
VCC
SCL
SDA
CA0
CA1
CA2
PMT1_CTL
DAC0
PMT2_CTL
PMT4_CTL
PMT5_CTL
PMT6_CTL
PMT3_CTL
DAC1
C143
100N
C144
100N
U19
bmp180
LGA7
CSB*
SDO*
SDA/SDI*
FPGA WARM RESET
1V8
R297_7
10.0K
PS_SRST_B
S3_7
KSC
R159
4.70K
R160
4.70K
U21
U22
U23
U24
U25
U26
U27
U28
adg608
TSSOP
PMT_HV_MON_R<4>
PMT_HV_MON_R<3>
PMT_HV_MON_R<2>
PMT_HV_MON_R<1>
PMT_CUR_MON_R<4>
PMT_CUR_MON_R<3>
PMT_CUR_MON_R<2>
PMT_CUR_MON_R<1>
R161
10.0K
C149
1N
C145
100N
BAT2_TEMP_R
BAT1_TEMP_R
LOAD_I_R
BAT_CENT_R
EXT_TEMP_R
P_12V_LI_R
P_12V_HI3_R
P_12V_HI2_R
R166
10.0K
C159
1N
C153
100N
V_RADIO_12V_R
V_PMT_12V_R
V_EXT2_24V_R
V_EXT1_24V_R
SP_CURR_R
SP_VOLT_R
BAT_OUT_P_R
WAT_LVL_R
R163
10.0K
C150
1N
C146
100N
PMT_T_MON_R<1>
PMT_T_MON_R<2>
PMT_T_MON_R<3>
PMT_T_MON_R<4>
V_3V3_R
V_5V_R
V_AN_P3V3_R
V_AN_N3V3_R
R168
10.0K
C161
1N
C154
100N
I_12V_RADIO
I_12V_PMTS
I_P3V3_ANA
I_N3V3_ANA
I_5V
I_1V2
I_3V3
I_1V8
R164
10.0K
C151
1N
C147
100N
I_24V_LED
I_V_INPUT
I_3V3_SC
I_1V0
P_12V_HI1_R
V_1V8_R
V_1V0_R
V_1V2_R
R169
10.0K
C163
1N
C155
100N
ADC<6>
ADC<5>
ADC<4>
ADC<3>
ADC<9>
ADC<0>
ADC<1>
ADC<2>
R165
10.0K
C152
1N
C148
100N
PMT_HV_MON_R<6>
PMT_HV_MON_R<5>
PMT_CUR_MON_R<6>
PMT_CUR_MON_R<5>
PMT_T_MON_R<6>
PMT_T_MON_R<5>
ADC<8>
ADC<7>
R172
10.0K
C164
1N
C156
100N
JTAG CONNECTOR
J6
CMSD2X7M
RCLAMP0524J
CMS
U18
FPGA MASTER
FRONT PANEL RESET
BP1_7
SKRT
R286_7
10.0K
100N
C165_7
10.0K
M34
adm6320
SOT23
SYS_RST_SW
WATCHDOG
/MR
WDI
/RESET
PS_POR_B
GND

REF: /CAO-PROJETS/SPB16X/LAGORIO/AUGER/SDEU/IE00/

LPSC
53, AVENUE DES MARTYRS
38026 GRENOBLE CEDEX
+33 (0)4.76.28.41.65

ETUDE: SDEU
DESSIN: K.H. BECKER
PAGE: 12/32
DATE: 03/03/2015

SLOW_CONTROL
MICRO-CONTROLLER

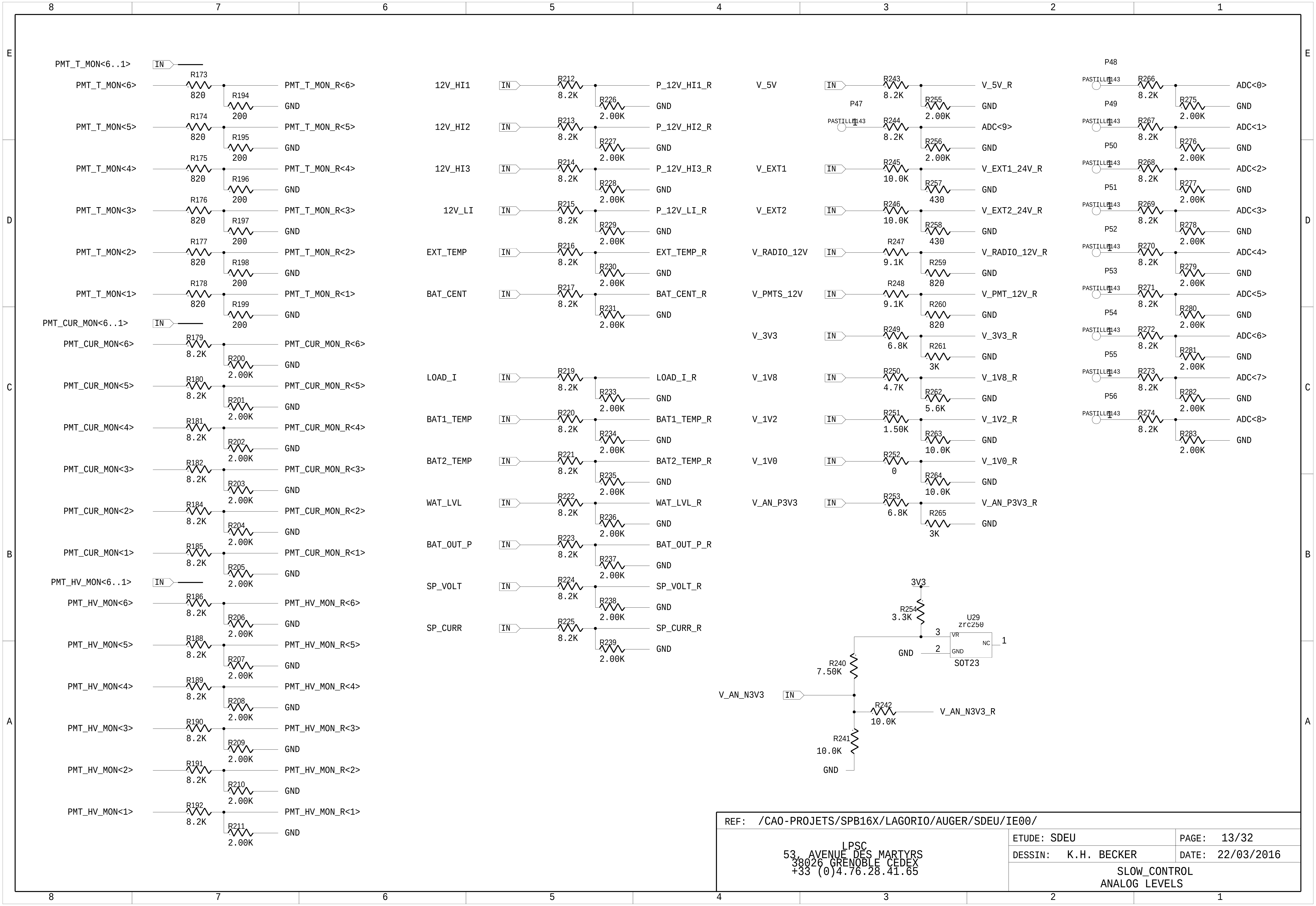

PMT_T_MON<6..1> IN
PMT_T_MON<6> R173 820 R194 200 PMT_T_MON_R<6> GND
PMT_T_MON<5> R174 820 R195 200 PMT_T_MON_R<5> GND
PMT_T_MON<4> R175 820 R196 200 PMT_T_MON_R<4> GND
PMT_T_MON<3> R176 820 R197 200 PMT_T_MON_R<3> GND
PMT_T_MON<2> R177 820 R198 200 PMT_T_MON_R<2> GND
PMT_T_MON<1> R178 820 R199 200 PMT_T_MON_R<1> GND
PMT_CUR_MON<6..1> IN
PMT_CUR_MON<6> R179 8.2K R200 2.00K PMT_CUR_MON_R<6> GND
PMT_CUR_MON<5> R180 8.2K R201 2.00K PMT_CUR_MON_R<5> GND
PMT_CUR_MON<4> R181 8.2K R202 2.00K PMT_CUR_MON_R<4> GND
PMT_CUR_MON<3> R182 8.2K R203 2.00K PMT_CUR_MON_R<3> GND
PMT_CUR_MON<2> R184 8.2K R204 2.00K PMT_CUR_MON_R<2> GND
PMT_CUR_MON<1> R185 8.2K R205 2.00K PMT_CUR_MON_R<1> GND
PMT_HV_MON<6..1> IN
PMT_HV_MON<6> R186 8.2K R206 2.00K PMT_HV_MON_R<6> GND
PMT_HV_MON<5> R188 8.2K R207 2.00K PMT_HV_MON_R<5> GND
PMT_HV_MON<4> R189 8.2K R208 2.00K PMT_HV_MON_R<4> GND
PMT_HV_MON<3> R190 8.2K R209 2.00K PMT_HV_MON_R<3> GND
PMT_HV_MON<2> R191 8.2K R210 2.00K PMT_HV_MON_R<2> GND
PMT_HV_MON<1> R192 8.2K R211 2.00K PMT_HV_MON_R<1> GND
12V_HI1 IN R212 8.2K R226 2.00K P_12V_HI1_R GND
12V_HI2 IN R213 8.2K R227 2.00K P_12V_HI2_R GND
12V_HI3 IN R214 8.2K R228 2.00K P_12V_HI3_R GND
12V_LI IN R215 8.2K R229 2.00K P_12V_LI_R GND
EXT_TEMP IN R216 8.2K R230 2.00K EXT_TEMP_R GND
BAT_CENT IN R217 8.2K R231 2.00K BAT_CENT_R GND
LOAD_I IN R219 8.2K R233 2.00K LOAD_I_R GND
BAT1_TEMP IN R220 8.2K R234 2.00K BAT1_TEMP_R GND
BAT2_TEMP IN R221 8.2K R235 2.00K BAT2_TEMP_R GND
WAT_LVL IN R222 8.2K R236 2.00K WAT_LVL_R GND
BAT_OUT_P IN R223 8.2K R237 2.00K BAT_OUT_P_R GND
SP_VOLT IN R224 8.2K R238 2.00K SP_VOLT_R GND
SP_CURR IN R225 8.2K R239 2.00K SP_CURR_R GND
V_5V IN R243 8.2K R255 2.00K V_5V_R GND
P47 PASTILLE143 1 R244 8.2K R256 2.00K ADC<9> GND
V_EXT1 IN R245 10.0K R257 430 V_EXT1_24V_R GND
V_EXT2 IN R246 10.0K R258 430 V_EXT2_24V_R GND
V_RADIO_12V IN R247 9.1K R259 820 V_RADIO_12V_R GND
V_PMTS_12V IN R248 9.1K R260 820 V_PMT_12V_R GND
V_3V3 IN R249 6.8K R261 3K V_3V3_R GND
V_1V8 IN R250 4.7K R262 5.6K V_1V8_R GND
V_1V2 IN R251 1.50K R263 10.0K V_1V2_R GND
V_1V0 IN R252 0 R264 10.0K V_1V0_R GND
V_AN_P3V3 IN R253 6.8K R265 3K V_AN_P3V3_R GND
P48 PASTILLE143 1 R266 8.2K R275 2.00K ADC<0> GND
P49 PASTILLE143 1 R267 8.2K R276 2.00K ADC<1> GND
P50 PASTILLE143 1 R268 8.2K R277 2.00K ADC<2> GND
P51 PASTILLE143 1 R269 8.2K R278 2.00K ADC<3> GND
P52 PASTILLE143 1 R270 8.2K R279 2.00K ADC<4> GND
P53 PASTILLE143 1 R271 8.2K R280 2.00K ADC<5> GND
P54 PASTILLE143 1 R272 8.2K R281 2.00K ADC<6> GND
P55 PASTILLE143 1 R273 8.2K R282 2.00K ADC<7> GND
P56 PASTILLE143 1 R274 8.2K R283 2.00K ADC<8> GND
3V3
R254 3.3K
U29 zrc250
3 VR
2 GND
NC 1
GND
SOT23
R240 7.50K
V_AN_N3V3 IN
R242 10.0K V_AN_N3V3_R
R241 10.0K
GND
8 7 6 5 4 3 2 1
E D C B A

REF: /CAO-PROJETS/SPB16X/LAGORIO/AUGER/SDEU/IE00/

LPSC
53, AVENUE DES MARTYRS
38026 GRENOBLE CEDEX
+33 (0)4.76.28.41.65

ETUDE: SDEU
PAGE: 13/32
DESSIN: K.H. BECKER
DATE: 22/03/2016

SLOW_CONTROL
ANALOG LEVELS

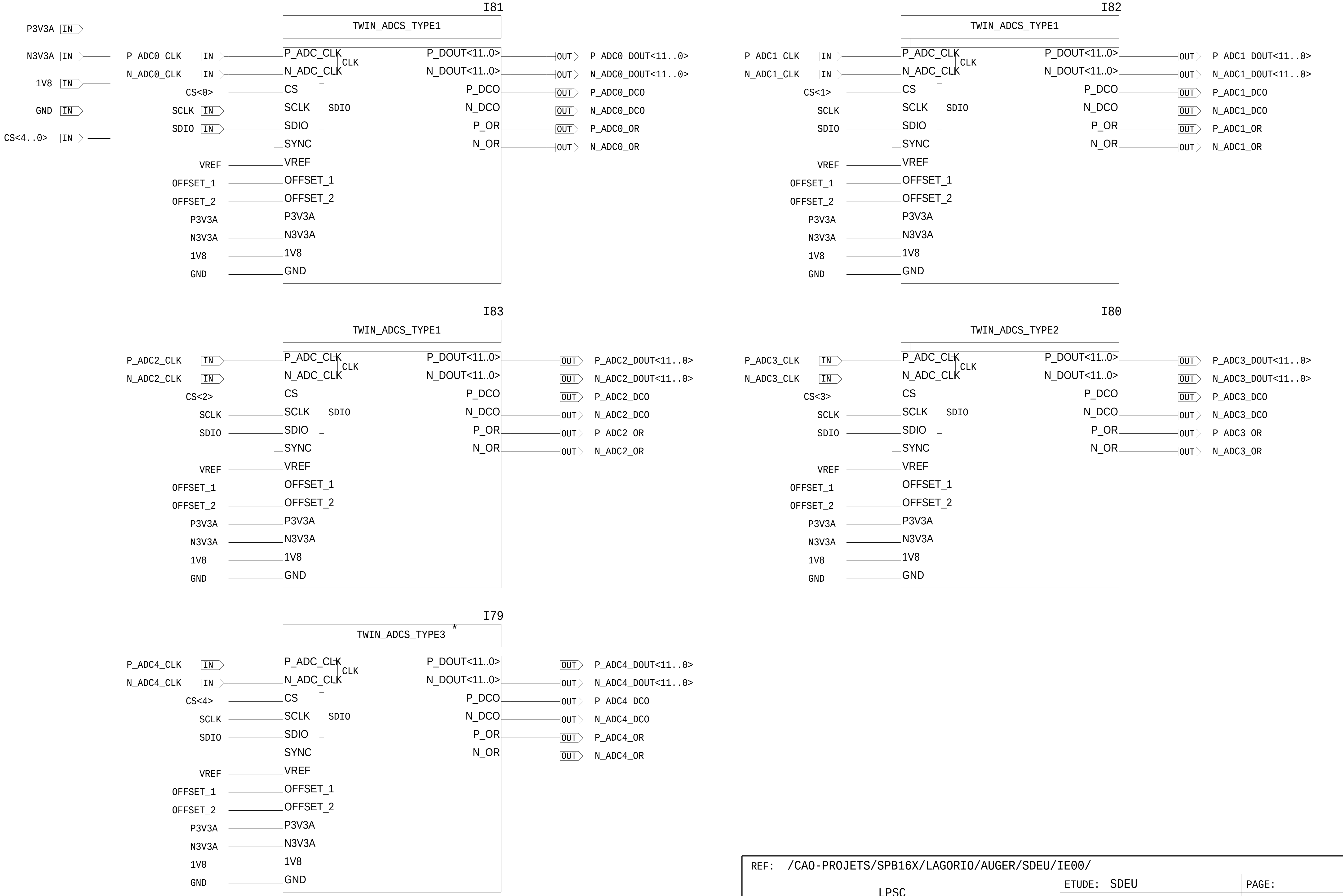
P3V3A IN
N3V3A IN
1V8 IN
GND IN
CS<4..0> IN
I81
TWIN_ADCS_TYPE1
P_ADC0_CLK IN
N_ADC0_CLK IN
CS<0>
SCLK IN
SDIO IN
VREF
OFFSET_1
OFFSET_2
P3V3A
N3V3A
1V8
GND
P_ADC_CLK
N_ADC_CLK
CLK
CS
SCLK
SDIO
SDIO
SYNC
VREF
OFFSET_1
OFFSET_2
P3V3A
N3V3A
1V8
GND
P_DOUT<11..0>
N_DOUT<11..0>
P_DCO
N_DCO
P_OR
N_OR
OUT P_ADC0_DOUT<11..0>
OUT N_ADC0_DOUT<11..0>
OUT P_ADC0_DCO
OUT N_ADC0_DCO
OUT P_ADC0_OR
OUT N_ADC0_OR
I82
TWIN_ADCS_TYPE1
P_ADC1_CLK IN
N_ADC1_CLK IN
CS<1>
SCLK
SDIO
OUT P_ADC1_DOUT<11..0>
OUT N_ADC1_DOUT<11..0>
OUT P_ADC1_DCO
OUT N_ADC1_DCO
OUT P_ADC1_OR
OUT N_ADC1_OR
I83
TWIN_ADCS_TYPE1
P_ADC2_CLK IN
N_ADC2_CLK IN
CS<2>
SCLK
SDIO
OUT P_ADC2_DOUT<11..0>
OUT N_ADC2_DOUT<11..0>
OUT P_ADC2_DCO
OUT N_ADC2_DCO
OUT P_ADC2_OR
OUT N_ADC2_OR
I80
TWIN_ADCS_TYPE2
P_ADC3_CLK IN
N_ADC3_CLK IN
CS<3>
SCLK
SDIO
OUT P_ADC3_DOUT<11..0>
OUT N_ADC3_DOUT<11..0>
OUT P_ADC3_DCO
OUT N_ADC3_DCO
OUT P_ADC3_OR
OUT N_ADC3_OR
I79
TWIN_ADCS_TYPE3 *
P_ADC4_CLK IN
N_ADC4_CLK IN
CS<4>
SCLK
SDIO
OUT P_ADC4_DOUT<11..0>
OUT N_ADC4_DOUT<11..0>
OUT P_ADC4_DCO
OUT N_ADC4_DCO
OUT P_ADC4_OR
OUT N_ADC4_OR

* TWIN_ADCS_TYPE3 PROVIDES 2 DESIGN TYPE:
SEE PAGE ??

REF: /CAO-PROJETS/SPB16X/LAGORIO/AUGER/SDEU/IE00/

LPSC
53, AVENUE DES MARTYRS
38026 GRENOBLE CEDEX
+33 (0)4.76.28.41.65

ETUDE: SDEU	PAGE:
DESSIN: GM & RA	DATE: 24/10/2014

FRONT END
ADCS

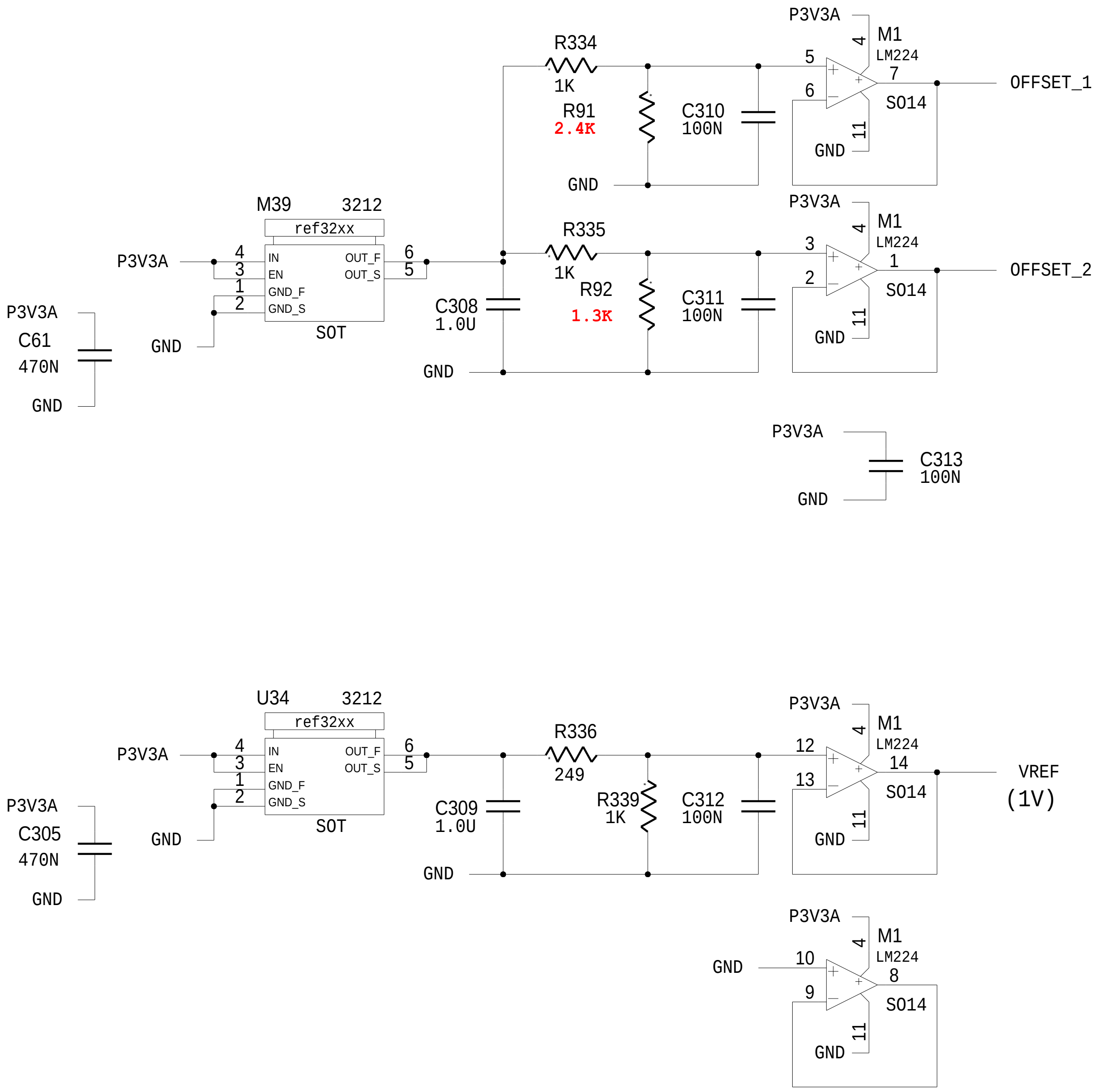
P3V3A
M1
LM224
R334
1K
5
7
OFFSET_1
6
R91
2.4K
C310
100N
SO14
11
GND
GND
M39
3212
ref32xx
P3V3A
4
3
1
2
IN
EN
GND_F
GND_S
OUT_F
OUT_S
6
5
SOT
R335
1K
P3V3A
M1
LM224
3
1
OFFSET_2
2
R92
1.3K
C311
100N
SO14
GND
C308
1.0U
GND
P3V3A
C61
470N
GND
GND
P3V3A
C313
100N
GND
U34
3212
ref32xx
P3V3A
4
3
1
2
IN
EN
GND_F
GND_S
OUT_F
OUT_S
6
5
SOT
R336
249
P3V3A
M1
LM224
12
14
VREF
(1V)
13
C309
1.0U
R339
1K
C312
100N
SO14
11
GND
GND
P3V3A
C305
470N
GND
GND
P3V3A
M1
LM224
GND
10
8
9
SO14
11
GND

REF: /CAO-PROJETS/SPB16X/LAGORIO/AUGER/SDEU/IE00/

LPSC
53, AVENUE DES MARTYRS
38026 GRENOBLE CEDEX
+33 (0)4.76.28.41.65

ETUDE: SDEU
PAGE:
DESSIN: GM & RA
DATE: 22/03/2016

FRONT END
REFERENCE VOLTAGES

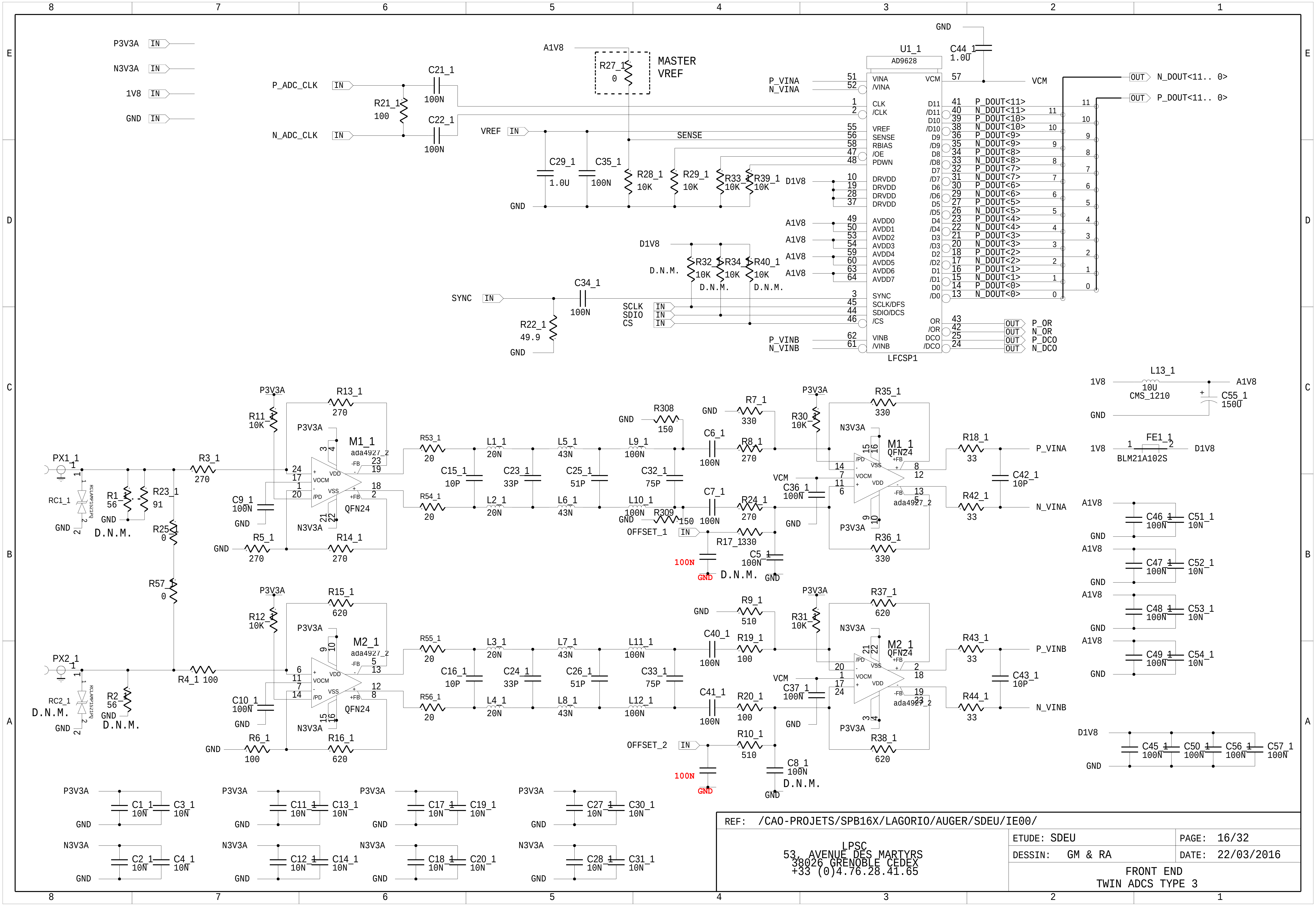
P3V3A IN
N3V3A IN
1V8 IN
GND IN
P_ADC_CLK IN
N_ADC_CLK IN
C21_1 100N
C22_1 100N
R21_1 100
A1V8
R27_1 0
MASTER VREF
VREF IN
SENSE
C29_1 1.0U
C35_1 100N
R28_1 10K
R29_1 10K
R33_1 10K
R39_1 10K
D1V8
R32_1 10K D.N.M.
R34_1 10K
R40_1 10K D.N.M.
D.N.M.
SYNC IN
C34_1 100N
R22_1 49.9
SCLK IN
SDIO IN
CS IN
U1_1 AD9628
LFCSP1
VINA /VINA CLK /CLK VREF SENSE RBIAS /OE PDWN
DRVDD AVDD0 AVDD1 AVDD2 AVDD3 AVDD4 AVDD5 AVDD6 AVDD7
SYNC SCLK/DFS SDIO/DCS /CS VINB /VINB
VCM
C44_1 1.0U
N_DOUT<11..0> OUT
P_DOUT<11..0> OUT
P_OR N_OR P_DCO N_DCO
P_VINA N_VINA P_VINB N_VINB
PX1_1
PX2_1
RC1_1
RC2_1
R1_1 56
R23_1 91
R2_1 56
D.N.M.
R3_1 270
R4_1 100
R25_1 0
R57_1 0
R11_1 10K
R12_1 10K
R13_1 270
R14_1 270
R5_1 270
R15_1 620
R16_1 620
R6_1 100
C9_1 100N
C10_1 100N
M1_1 ada4927_2 QFN24
M2_1 ada4927_2 QFN24
R53_1 20
R54_1 20
R55_1 20
R56_1 20
L1_1 20N L2_1 20N L3_1 20N L4_1 20N
L5_1 43N L6_1 43N L7_1 43N L8_1 43N
L9_1 100N L10_1 100N L11_1 100N L12_1 100N
C15_1 10P C16_1 10P
C23_1 33P C24_1 33P
C25_1 51P C26_1 51P
C32_1 75P C33_1 75P
R308 150
R309 150
C6_1 100N C7_1 100N
C40_1 100N C41_1 100N
R7_1 330
R8_1 270
R24_1 270
R17_1 330
R9_1 510
R19_1 100
R20_1 100
R10_1 510
OFFSET_1 IN
OFFSET_2 IN
C5_1 100N D.N.M.
C8_1 100N D.N.M.
100N
GND
R30_1 10K
R31_1 10K
C36_1 100N
C37_1 100N
R35_1 330
R36_1 330
R37_1 620
R38_1 620
R18_1 33
R42_1 33
R43_1 33
R44_1 33
C42_1 10P
C43_1 10P
L13_1 10U CMS_1210
C55_1 150U
FE1_1 BLM21A102S
C46_1 100N C51_1 10N
C47_1 100N C52_1 10N
C48_1 100N C53_1 10N
C49_1 100N C54_1 10N
C45_1 100N C50_1 100N C56_1 100N C57_1 100N
C1_1 10N C3_1 10N C2_1 10N C4_1 10N
C11_1 10N C13_1 10N C12_1 10N C14_1 10N
C17_1 10N C19_1 10N C18_1 10N C20_1 10N
C27_1 10N C30_1 10N C28_1 10N C31_1 10N
8 7 6 5 4 3 2 1
E D C B A

REF: /CAO-PROJETS/SPB16X/LAGORIO/AUGER/SDEU/IE00/

LPSC
53, AVENUE DES MARTYRS
38026 GRENOBLE CEDEX
+33 (0)4.76.28.41.65

ETUDE:	SDEU	PAGE:	16/32
DESSIN:	GM & RA	DATE:	22/03/2016

FRONT END
TWIN ADCS TYPE 3

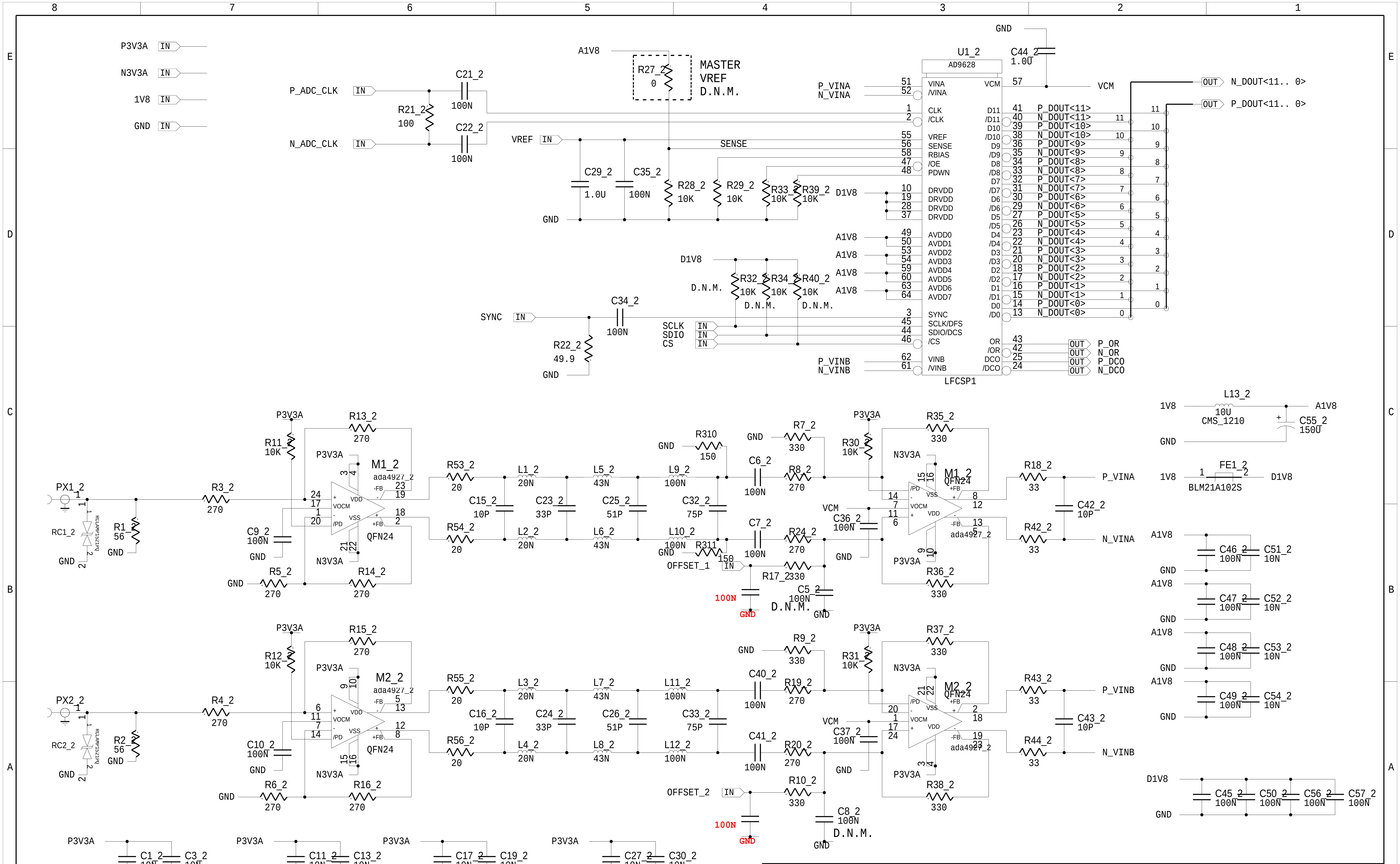
P3V3A IN
N3V3A IN
1V8 IN
GND IN
P_ADC_CLK IN
N_ADC_CLK IN
R21_2 100
C21_2 100N
C22_2 100N
A1V8
R27_2 0
MASTER VREF D.N.M.
VREF IN
SENSE
C29_2 1.0U
C35_2 100N
R28_2 10K
R29_2 10K
R33_2 10K
R39_2 10K
D1V8
GND
U1_2 AD9628
C44_2 1.0U
VCM
VINA /VINA CLK /CLK VREF SENSE RBIAS /OE PDWN
DRVDD DRVDD DRVDD DRVDD
AVDD0 AVDD1 AVDD2 AVDD3 AVDD4 AVDD5 AVDD6 AVDD7
SYNC SCLK/DFS SDIO/DCS /CS
VINB /VINB
LFCSP1
D11 /D11 D10 /D10 D9 /D9 D8 /D8 D7 /D7 D6 /D6 D5 /D5 D4 /D4 D3 /D3 D2 /D2 D1 /D1 D0 /D0
OR /OR DCO /DCO
P_DOUT<11> N_DOUT<11> … P_DOUT<0> N_DOUT<0>
OUT N_DOUT<11..0>
OUT P_DOUT<11..0>
OUT P_OR
OUT N_OR
OUT P_DCO
OUT N_DCO
P_VINA N_VINA
P_VINB N_VINB
R32_2 10K D.N.M.
R34_2 10K D.N.M.
R40_2 10K D.N.M.
SCLK IN
SDIO IN
CS IN
SYNC IN
C34_2 100N
R22_2 49.9
PX1_2
RC1_2 RCLAMP1521PQ
R1_2 56
R3_2 270
R11_2 10K
R13_2 270
R14_2 270
R5_2 270
C9_2 100N
M1_2 ada4927_2 QFN24
VOCM /PD VDD VSS -FB +FB
R53_2 20
R54_2 20
C15_2 10P
L1_2 20N
L2_2 20N
C23_2 33P
L5_2 43N
L6_2 43N
C25_2 51P
L9_2 100N
L10_2 100N
C32_2 75P
R310 150
R311 150
C6_2 100N
C7_2 100N
R7_2 330
R8_2 270
R24_2 270
R17_2 330
OFFSET_1 IN
100N
C5_2 100N D.N.M.
R30_2 10K
C36_2 100N
R35_2 330
R36_2 330
R18_2 33
R42_2 33
C42_2 10P
PX2_2
RC2_2 RCLAMP1521PQ
R2_2 56
R4_2 270
R12_2 10K
R15_2 270
R16_2 270
R6_2 270
C10_2 100N
M2_2 ada4927_2 QFN24
R55_2 20
R56_2 20
C16_2 10P
L3_2 20N
L4_2 20N
C24_2 33P
L7_2 43N
L8_2 43N
C26_2 51P
L11_2 100N
L12_2 100N
C33_2 75P
C40_2 100N
C41_2 100N
R9_2 330
R19_2 270
R20_2 270
R10_2 330
OFFSET_2 IN
C8_2 100N D.N.M.
R31_2 10K
C37_2 100N
R37_2 330
R38_2 330
R43_2 33
R44_2 33
C43_2 10P
L13_2 10U CMS_1210
C55_2 150U
FE1_2 BLM21A102S
C46_2 100N C51_2 10N
C47_2 100N C52_2 10N
C48_2 100N C53_2 10N
C49_2 100N C54_2 10N
C45_2 100N C50_2 100N C56_2 100N C57_2 100N
C1_2 10N C3_2 10N
C2_2 10N C4_2 10N
C11_2 10N C13_2 10N
C12_2 10N C14_2 10N
C17_2 10N C19_2 10N
C18_2 10N C20_2 10N
C27_2 10N C30_2 10N
C28_2 10N C31_2 10N

REF: /CAO-PROJETS/SPB16X/LAGORIO/AUGER/SDEU/IE00/

LPSC
53, AVENUE DES MARTYRS
38026 GRENOBLE CEDEX
+33 (0)4.76.28.41.65

ETUDE: SDEU
DESSIN: GM & RA
PAGE: 17/32
DATE: 22/03/2016

FRONT END
TWIN ADCS TYPE 2

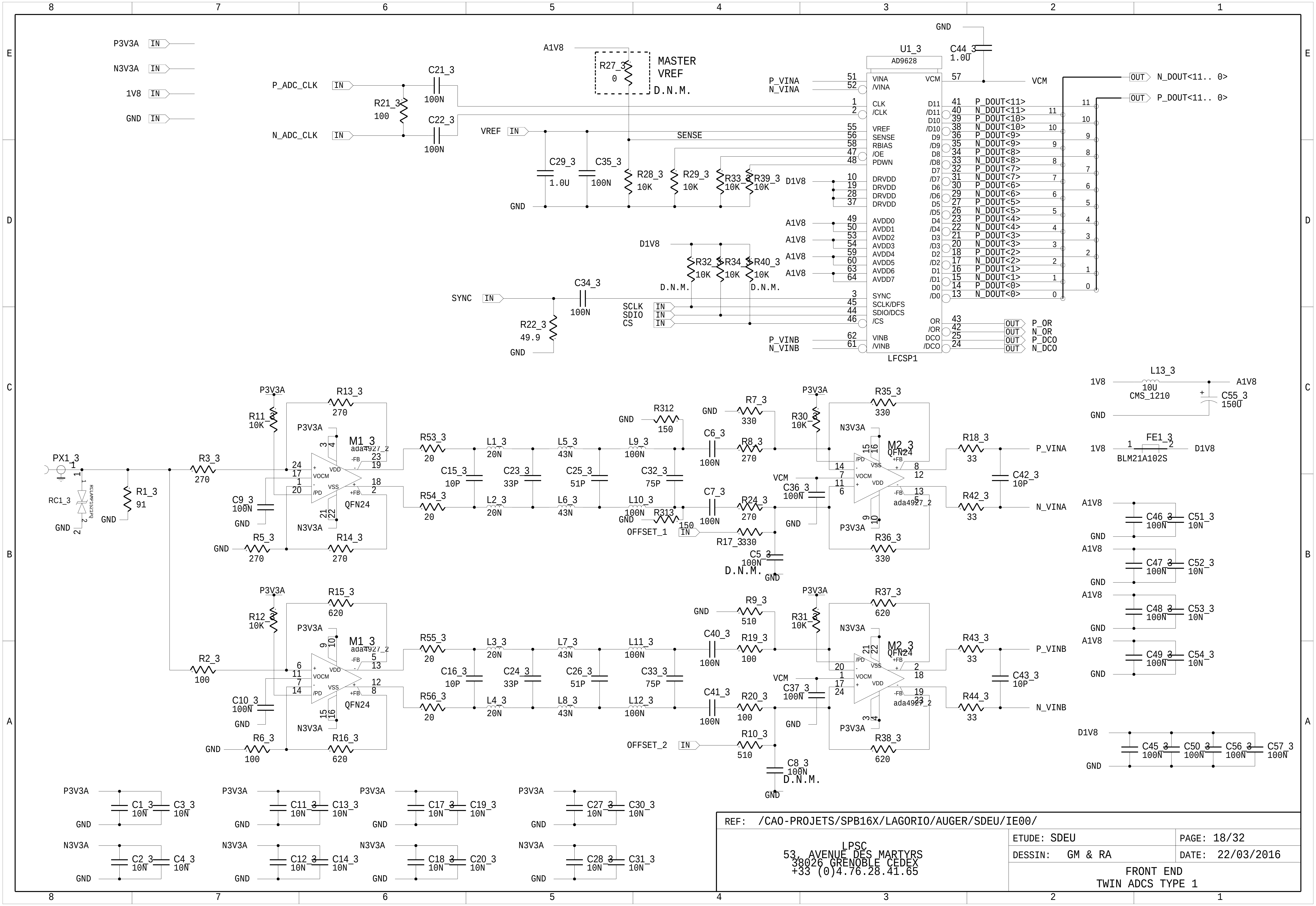
P3V3A
N3V3A
1V8
GND
P_ADC_CLK
N_ADC_CLK
R21_3 100
C21_3 100N
C22_3 100N
A1V8
R27_3 0
MASTER VREF
D.N.M.
VREF
SENSE
C29_3 1.0U
C35_3 100N
R28_3 10K
R29_3 10K
R33_3 10K
R39_3 10K
D1V8
R32_3 10K D.N.M.
R34_3 10K
R40_3 10K D.N.M.
SYNC
C34_3 100N
R22_3 49.9
SCLK
SDIO
CS
U1_3
AD9628
LFCSP1
P_VINA
N_VINA
P_VINB
N_VINB
C44_3 1.0U
VCM
N_DOUT<11.. 0>
P_DOUT<11.. 0>
P_OR
N_OR
P_DCO
N_DCO
L13_3 10U CMS_1210
C55_3 150U
FE1_3 BLM21A102S
PX1_3
RC1_3
R1_3 91
R3_3 270
R2_3 100
R11_3 10K
R12_3 10K
R13_3 270
R14_3 270
R5_3 270
R15_3 620
R16_3 620
R6_3 100
C9_3 100N
C10_3 100N
M1_3 ada4927_2 QFN24
M2_3 ada4927_2 QFN24
R53_3 20
R54_3 20
R55_3 20
R56_3 20
L1_3 20N
L2_3 20N
L3_3 20N
L4_3 20N
L5_3 43N
L6_3 43N
L7_3 43N
L8_3 43N
L9_3 100N
L10_3 100N
L11_3 100N
L12_3 100N
C15_3 10P
C16_3 10P
C23_3 33P
C24_3 33P
C25_3 51P
C26_3 51P
C32_3 75P
C33_3 75P
R312 150
R313 150
C6_3 100N
C7_3 100N
C40_3 100N
C41_3 100N
R7_3 330
R8_3 270
R24_3 270
R17_3 330
C5_3 100N D.N.M.
OFFSET_1
R9_3 510
R19_3 100
R20_3 100
R10_3 510
C8_3 100N D.N.M.
OFFSET_2
R30_3 10K
R31_3 10K
R35_3 330
R36_3 330
R37_3 620
R38_3 620
C36_3 100N
C37_3 100N
R18_3 33
R42_3 33
R43_3 33
R44_3 33
C42_3 10P
C43_3 10P
C46_3 100N
C51_3 10N
C47_3 100N
C52_3 10N
C48_3 100N
C53_3 10N
C49_3 100N
C54_3 10N
C45_3 100N
C50_3 100N
C56_3 100N
C57_3 100N
C1_3 10N
C3_3 10N
C2_3 10N
C4_3 10N
C11_3 10N
C13_3 10N
C12_3 10N
C14_3 10N
C17_3 10N
C19_3 10N
C18_3 10N
C20_3 10N
C27_3 10N
C30_3 10N
C28_3 10N
C31_3 10N

REF: /CAO-PROJETS/SPB16X/LAGORIO/AUGER/SDEU/IE00/

LPSC
53, AVENUE DES MARTYRS
38026 GRENOBLE CEDEX
+33 (0)4.76.28.41.65

ETUDE: SDEU

PAGE: 18/32

DESSIN: GM & RA

DATE: 22/03/2016

FRONT END
TWIN ADCS TYPE 1

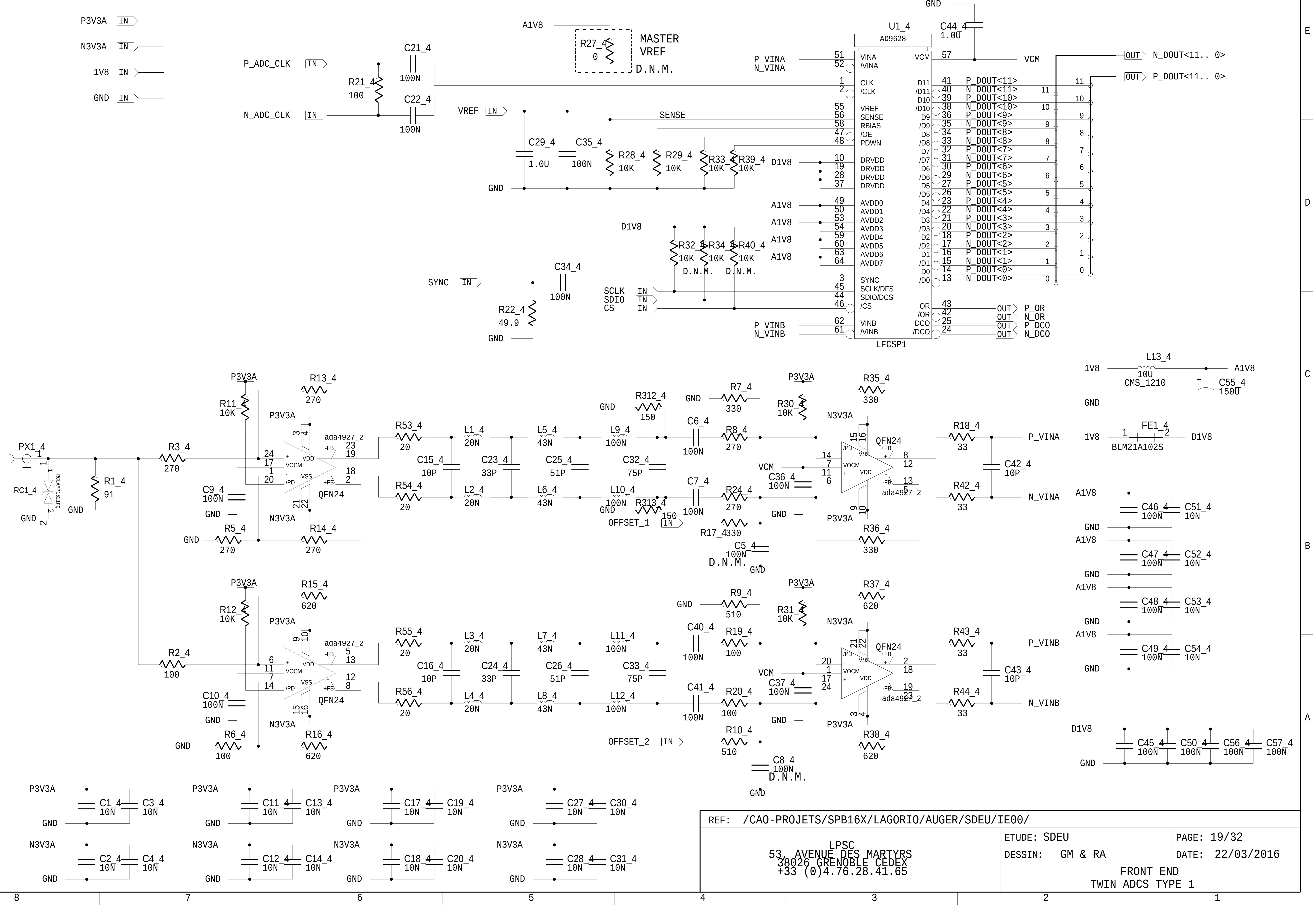
P3V3A IN
N3V3A IN
1V8 IN
GND IN
P_ADC_CLK IN
N_ADC_CLK IN
C21_4 100N
C22_4 100N
R21_4 100
A1V8
R27_4 0
MASTER VREF D.N.M.
VREF IN
SENSE
C29_4 1.0U
C35_4 100N
R28_4 10K
R29_4 10K
R33_4 10K
R39_4 10K
GND
U1_4 AD9628
LFCSP1
C44_4 1.0U
VCM
VINA /VINA CLK /CLK VREF SENSE RBIAS /OE PDWN DRVDD AVDD0 AVDD1 AVDD2 AVDD3 AVDD4 AVDD5 AVDD6 AVDD7 SYNC SCLK/DFS SDIO/DCS /CS VINB /VINB
D11 /D11 D10 /D10 D9 /D9 D8 /D8 D7 /D7 D6 /D6 D5 /D5 D4 /D4 D3 /D3 D2 /D2 D1 /D1 D0 /D0 OR /OR DCO /DCO
P_VINA N_VINA P_VINB N_VINB
D1V8
A1V8
R32_4 10K
R34_4 10K D.N.M.
R40_4 10K D.N.M.
SYNC IN
C34_4 100N
R22_4 49.9
SCLK IN
SDIO IN
CS IN
OUT N_DOUT<11.. 0>
OUT P_DOUT<11.. 0>
P_DOUT<11> N_DOUT<11> P_DOUT<10> N_DOUT<10> P_DOUT<9> N_DOUT<9> P_DOUT<8> N_DOUT<8> P_DOUT<7> N_DOUT<7> P_DOUT<6> N_DOUT<6> P_DOUT<5> N_DOUT<5> P_DOUT<4> N_DOUT<4> P_DOUT<3> N_DOUT<3> P_DOUT<2> N_DOUT<2> P_DOUT<1> N_DOUT<1> P_DOUT<0> N_DOUT<0>
OUT P_OR
OUT N_OR
OUT P_DCO
OUT N_DCO
L13_4 10U CMS_1210
1V8
C55_4 150U
FE1_4 BLM21A102S
PX1_4
RC1_4 RCLAMP1521PQ
R1_4 91
R3_4 270
R2_4 100
R11_4 10K
R12_4 10K
R13_4 270
R14_4 270
R5_4 270
R15_4 620
R16_4 620
R6_4 100
C9_4 100N
C10_4 100N
ada4927_2 QFN24
VOCM /PD VDD VSS -FB +FB
R53_4 20
R54_4 20
R55_4 20
R56_4 20
L1_4 20N
L2_4 20N
L3_4 20N
L4_4 20N
L5_4 43N
L6_4 43N
L7_4 43N
L8_4 43N
L9_4 100N
L10_4 100N
L11_4 100N
L12_4 100N
C15_4 10P
C16_4 10P
C23_4 33P
C24_4 33P
C25_4 51P
C26_4 51P
C32_4 75P
C33_4 75P
R312_4 150
R313_4 150
OFFSET_1 IN
OFFSET_2 IN
C6_4 100N
C7_4 100N
C40_4 100N
C41_4 100N
R7_4 330
R8_4 270
R24_4 270
R17_4 330
C5_4 100N D.N.M.
R9_4 510
R19_4 100
R20_4 100
R10_4 510
C8_4 100N D.N.M.
C36_4 100N
C37_4 100N
R30_4 10K
R31_4 10K
R35_4 330
R36_4 330
R37_4 620
R38_4 620
R18_4 33
R42_4 33
R43_4 33
R44_4 33
C42_4 10P
C43_4 10P
C46_4 100N
C51_4 10N
C47_4 100N
C52_4 10N
C48_4 100N
C53_4 10N
C49_4 100N
C54_4 10N
C45_4 100N
C50_4 100N
C56_4 100N
C57_4 100N
C1_4 10N
C3_4 10N
C2_4 10N
C4_4 10N
C11_4 10N
C13_4 10N
C12_4 10N
C14_4 10N
C17_4 10N
C19_4 10N
C18_4 10N
C20_4 10N
C27_4 10N
C30_4 10N
C28_4 10N
C31_4 10N

REF: /CAO-PROJETS/SPB16X/LAGORIO/AUGER/SDEU/IE00/

LPSC
53, AVENUE DES MARTYRS
38026 GRENOBLE CEDEX
+33 (0)4.76.28.41.65

ETUDE: SDEU

PAGE: 19/32

DESSIN: GM & RA

DATE: 22/03/2016

FRONT END
TWIN ADCS TYPE 1

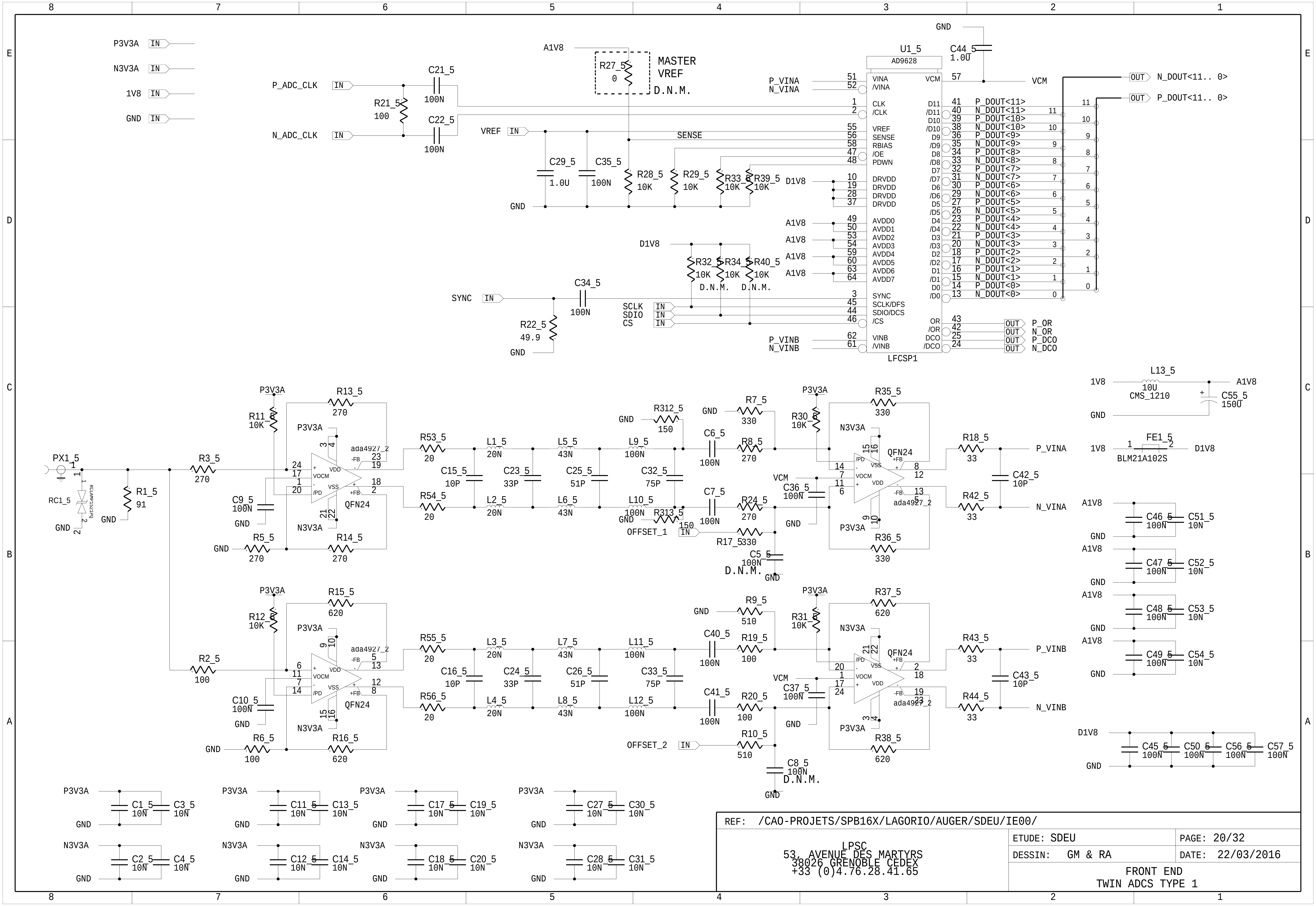

P3V3A IN
N3V3A IN
1V8 IN
GND IN
P_ADC_CLK IN
N_ADC_CLK IN
C21_5 100N
C22_5 100N
R21_5 100
A1V8
R27_5 0
MASTER VREF D.N.M.
VREF IN
SENSE
C29_5 1.0U
C35_5 100N
R28_5 10K
R29_5 10K
R33_5 10K
R39_5 10K
D1V8
GND
U1_5 AD9628
C44_5 1.0U
VCM
P_VINA
N_VINA
VINA
/VINA
CLK
/CLK
VREF
SENSE
RBIAS
/OE
PDWN
DRVDD
AVDD0
AVDD1
AVDD2
AVDD3
AVDD4
AVDD5
AVDD6
AVDD7
SYNC
SCLK/DFS
SDIO/DCS
/CS
VINB
/VINB
LFCSP1
OUT N_DOUT<11.. 0>
OUT P_DOUT<11.. 0>
P_DOUT<11>
N_DOUT<11>
P_DOUT<10>
N_DOUT<10>
P_DOUT<9>
N_DOUT<9>
P_DOUT<8>
N_DOUT<8>
P_DOUT<7>
N_DOUT<7>
P_DOUT<6>
N_DOUT<6>
P_DOUT<5>
N_DOUT<5>
P_DOUT<4>
N_DOUT<4>
P_DOUT<3>
N_DOUT<3>
P_DOUT<2>
N_DOUT<2>
P_DOUT<1>
N_DOUT<1>
P_DOUT<0>
N_DOUT<0>
OR
/OR
DCO
/DCO
OUT P_OR
OUT N_OR
OUT P_DCO
OUT N_DCO
R32_5 10K
R34_5 10K D.N.M.
R40_5 10K D.N.M.
SYNC IN
C34_5 100N
R22_5 49.9
SCLK IN
SDIO IN
CS IN
P_VINB
N_VINB
L13_5 10U CMS_1210
C55_5 150U
FE1_5 BLM21A102S
PX1_5
RC1_5 RCLAMP1521PQ
R1_5 91
R3_5 270
R2_5 100
R11_5 10K
R12_5 10K
R13_5 270
R14_5 270
R5_5 270
R15_5 620
R16_5 620
R6_5 100
C9_5 100N
C10_5 100N
ada4927_2
QFN24
VOCM
/PD
VDD
VSS
-FB
+FB
R53_5 20
R54_5 20
R55_5 20
R56_5 20
L1_5 20N
L2_5 20N
L3_5 20N
L4_5 20N
L5_5 43N
L6_5 43N
L7_5 43N
L8_5 43N
L9_5 100N
L10_5 100N
L11_5 100N
L12_5 100N
C15_5 10P
C16_5 10P
C23_5 33P
C24_5 33P
C25_5 51P
C26_5 51P
C32_5 75P
C33_5 75P
R312_5 150
R313_5 150
OFFSET_1 IN
OFFSET_2 IN
C6_5 100N
C7_5 100N
C40_5 100N
C41_5 100N
R7_5 330
R8_5 270
R24_5 270
R17_5 330
C5_5 100N D.N.M.
R9_5 510
R19_5 100
R20_5 100
R10_5 510
C8_5 100N D.N.M.
R30_5 10K
R31_5 10K
C36_5 100N
C37_5 100N
R35_5 330
R36_5 330
R37_5 620
R38_5 620
R18_5 33
R42_5 33
R43_5 33
R44_5 33
C42_5 10P
C43_5 10P
C46_5 100N
C51_5 10N
C47_5 100N
C52_5 10N
C48_5 100N
C53_5 10N
C49_5 100N
C54_5 10N
C45_5 100N
C50_5 100N
C56_5 100N
C57_5 100N
C1_5 10N
C3_5 10N
C2_5 10N
C4_5 10N
C11_5 10N
C13_5 10N
C12_5 10N
C14_5 10N
C17_5 10N
C19_5 10N
C18_5 10N
C20_5 10N
C27_5 10N
C30_5 10N
C28_5 10N
C31_5 10N

REF: /CAO-PROJETS/SPB16X/LAGORIO/AUGER/SDEU/IE00/

LPSC
53, AVENUE DES MARTYRS
38026 GRENOBLE CEDEX
+33 (0)4.76.28.41.65

ETUDE: SDEU
PAGE: 20/32
DESSIN: GM & RA
DATE: 22/03/2016

FRONT END
TWIN ADCS TYPE 1

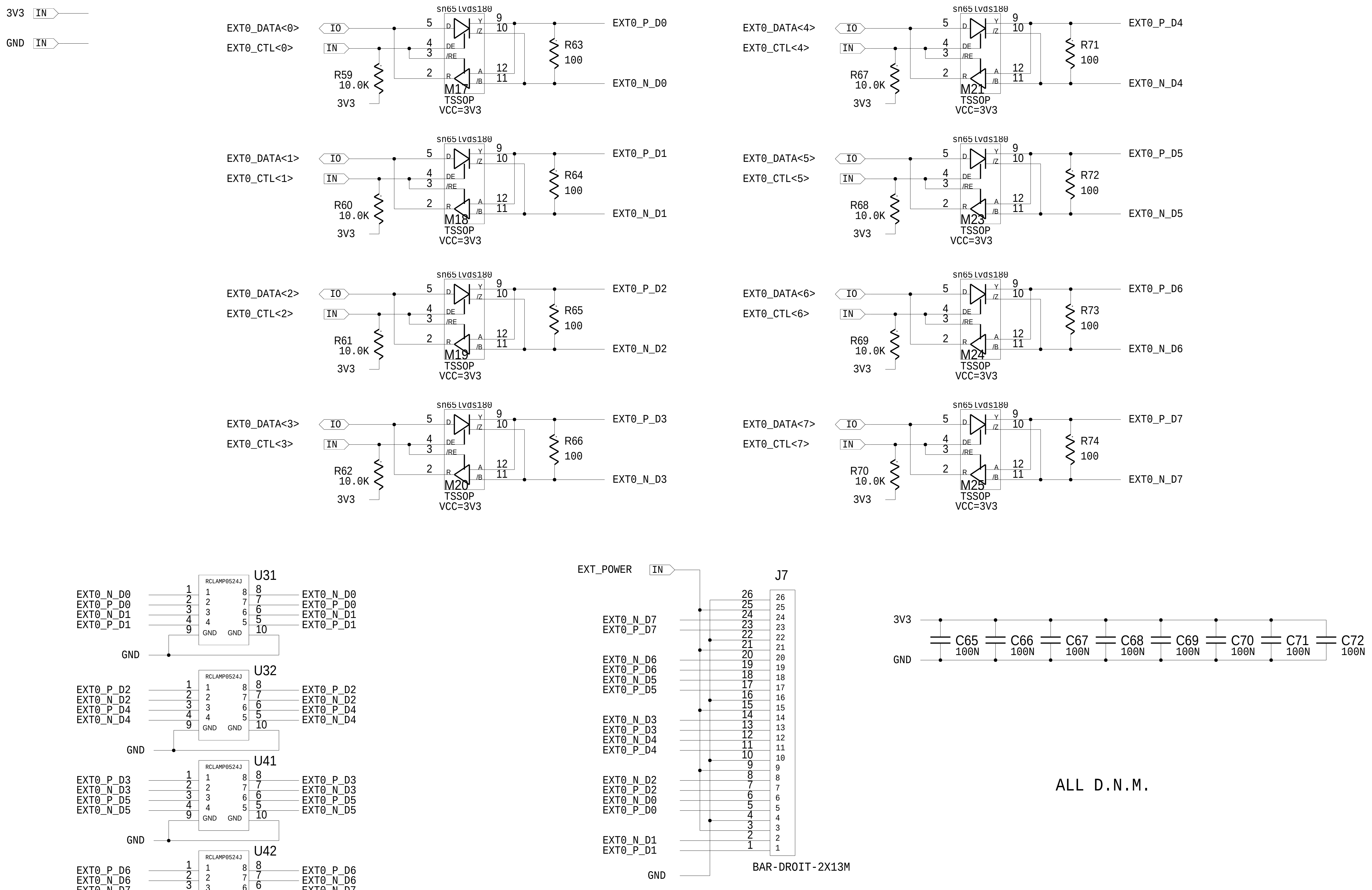
3V3 IN
GND IN
EXT0_DATA<0> IO
EXT0_CTL<0> IN
R59 10.0K 3V3
sn65lvds180
M17 TSSOP VCC=3V3
R63 100
EXT0_P_D0
EXT0_N_D0
EXT0_DATA<1> IO
EXT0_CTL<1> IN
R60 10.0K 3V3
M18 TSSOP VCC=3V3
R64 100
EXT0_P_D1
EXT0_N_D1
EXT0_DATA<2> IO
EXT0_CTL<2> IN
R61 10.0K 3V3
M19 TSSOP VCC=3V3
R65 100
EXT0_P_D2
EXT0_N_D2
EXT0_DATA<3> IO
EXT0_CTL<3> IN
R62 10.0K 3V3
M20 TSSOP VCC=3V3
R66 100
EXT0_P_D3
EXT0_N_D3
EXT0_DATA<4> IO
EXT0_CTL<4> IN
R67 10.0K 3V3
M21 TSSOP VCC=3V3
R71 100
EXT0_P_D4
EXT0_N_D4
EXT0_DATA<5> IO
EXT0_CTL<5> IN
R68 10.0K 3V3
M23 TSSOP VCC=3V3
R72 100
EXT0_P_D5
EXT0_N_D5
EXT0_DATA<6> IO
EXT0_CTL<6> IN
R69 10.0K 3V3
M24 TSSOP VCC=3V3
R73 100
EXT0_P_D6
EXT0_N_D6
EXT0_DATA<7> IO
EXT0_CTL<7> IN
R70 10.0K 3V3
M25 TSSOP VCC=3V3
R74 100
EXT0_P_D7
EXT0_N_D7
D DE /RE R Y /Z A /B
5 4 3 2 9 10 12 11
U31 RCLAMP0524J
EXT0_N_D0 EXT0_P_D0 EXT0_N_D1 EXT0_P_D1
GND
U32 RCLAMP0524J
EXT0_P_D2 EXT0_N_D2 EXT0_P_D4 EXT0_N_D4
GND
U41 RCLAMP0524J
EXT0_P_D3 EXT0_N_D3 EXT0_P_D5 EXT0_N_D5
GND
U42 RCLAMP0524J
EXT0_P_D6 EXT0_N_D6 EXT0_N_D7 EXT0_P_D7
GND
EXT_POWER IN
J7
EXT0_N_D7 EXT0_P_D7
EXT0_N_D6 EXT0_P_D6 EXT0_N_D5 EXT0_P_D5
EXT0_N_D3 EXT0_P_D3 EXT0_N_D4 EXT0_P_D4
EXT0_N_D2 EXT0_P_D2 EXT0_N_D0 EXT0_P_D0
EXT0_N_D1 EXT0_P_D1
GND
BAR-DROIT-2X13M
3V3
GND
C65 100N
C66 100N
C67 100N
C68 100N
C69 100N
C70 100N
C71 100N
C72 100N
ALL D.N.M.

REF: /CAO-PROJETS/SPB16X/LAGORIO/AUGER/EVAL-UUB/

LPSC
53, AVENUE DES MARTYRS
38026 GRENOBLE CEDEX
+33 (0)4.76.28.00.00

ETUDE: EVAL-UUB
PAGE: 21/32
DESSIN: EL & JB
DATE: 22/03/2016

EXTERNALS CONNECTORS

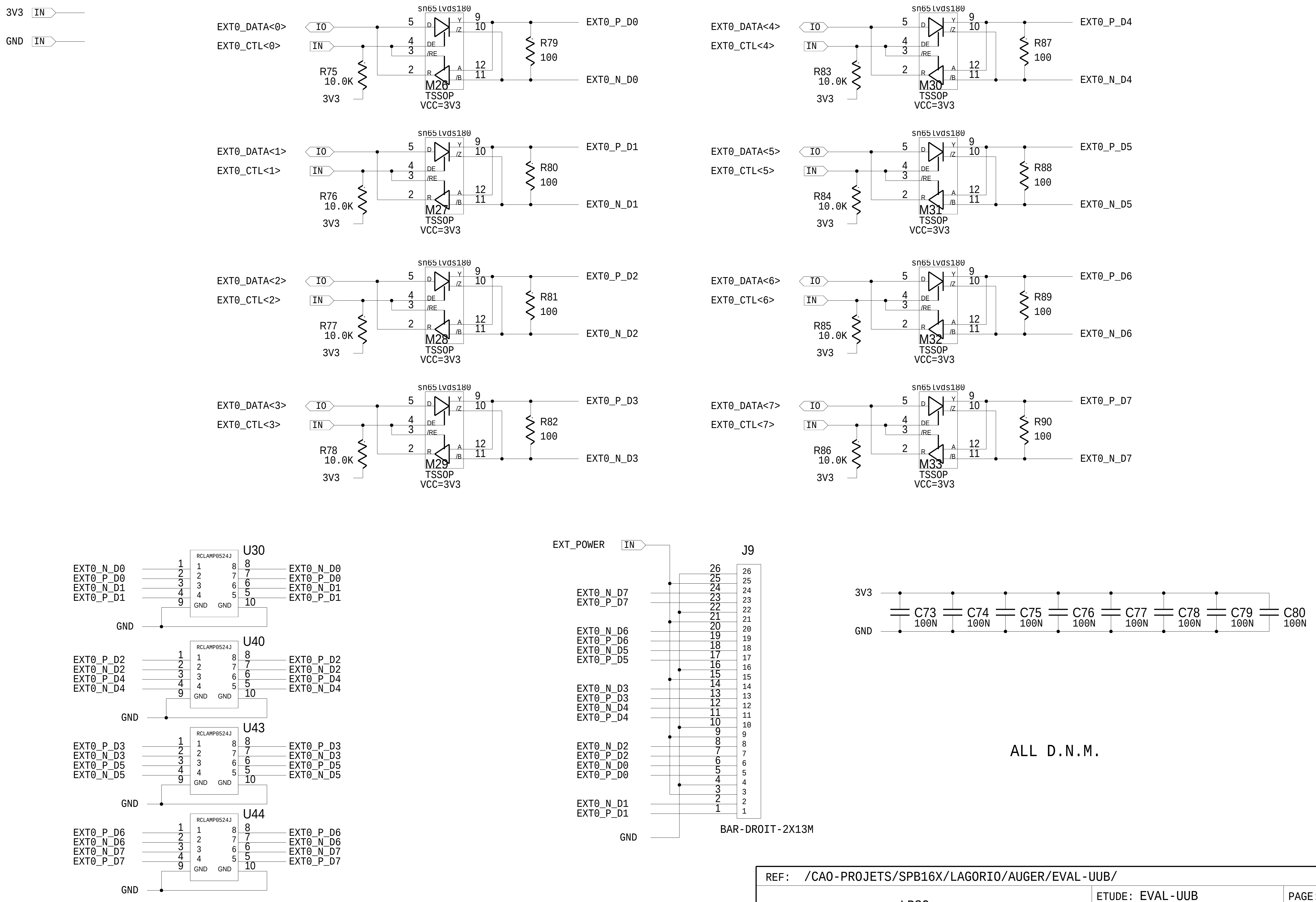
3V3 IN
GND IN
EXT0_DATA<0> IO
EXT0_CTL<0> IN
R75 10.0K 3V3
sn65lvds180 M26 TSSOP VCC=3V3
R79 100
EXT0_P_D0
EXT0_N_D0
EXT0_DATA<1> IO
EXT0_CTL<1> IN
R76 10.0K 3V3
sn65lvds180 M27 TSSOP VCC=3V3
R80 100
EXT0_P_D1
EXT0_N_D1
EXT0_DATA<2> IO
EXT0_CTL<2> IN
R77 10.0K 3V3
sn65lvds180 M28 TSSOP VCC=3V3
R81 100
EXT0_P_D2
EXT0_N_D2
EXT0_DATA<3> IO
EXT0_CTL<3> IN
R78 10.0K 3V3
sn65lvds180 M29 TSSOP VCC=3V3
R82 100
EXT0_P_D3
EXT0_N_D3
EXT0_DATA<4> IO
EXT0_CTL<4> IN
R83 10.0K 3V3
sn65lvds180 M30 TSSOP VCC=3V3
R87 100
EXT0_P_D4
EXT0_N_D4
EXT0_DATA<5> IO
EXT0_CTL<5> IN
R84 10.0K 3V3
sn65lvds180 M31 TSSOP VCC=3V3
R88 100
EXT0_P_D5
EXT0_N_D5
EXT0_DATA<6> IO
EXT0_CTL<6> IN
R85 10.0K 3V3
sn65lvds180 M32 TSSOP VCC=3V3
R89 100
EXT0_P_D6
EXT0_N_D6
EXT0_DATA<7> IO
EXT0_CTL<7> IN
R86 10.0K 3V3
sn65lvds180 M33 TSSOP VCC=3V3
R90 100
EXT0_P_D7
EXT0_N_D7
U30 RCLAMP0524J
EXT0_N_D0 EXT0_P_D0 EXT0_N_D1 EXT0_P_D1 GND
U40 RCLAMP0524J
EXT0_P_D2 EXT0_N_D2 EXT0_P_D4 EXT0_N_D4 GND
U43 RCLAMP0524J
EXT0_P_D3 EXT0_N_D3 EXT0_P_D5 EXT0_N_D5 GND
U44 RCLAMP0524J
EXT0_P_D6 EXT0_N_D6 EXT0_N_D7 EXT0_P_D7 GND
EXT_POWER IN
J9 BAR-DROIT-2X13M
EXT0_N_D7 EXT0_P_D7
EXT0_N_D6 EXT0_P_D6 EXT0_N_D5 EXT0_P_D5
EXT0_N_D3 EXT0_P_D3 EXT0_N_D4 EXT0_P_D4
EXT0_N_D2 EXT0_P_D2 EXT0_N_D0 EXT0_P_D0
EXT0_N_D1 EXT0_P_D1
GND
3V3 GND
C73 100N
C74 100N
C75 100N
C76 100N
C77 100N
C78 100N
C79 100N
C80 100N
ALL D.N.M.

REF: /CAO-PROJETS/SPB16X/LAGORIO/AUGER/EVAL-UUB/

LPSC
53, AVENUE DES MARTYRS
38026 GRENOBLE CEDEX
+33 (0)4.76.28.00.00

ETUDE: EVAL-UUB
PAGE: 22/32
DESSIN: EL & JB
DATE: 22/03/2016

EXTERNALS CONNECTORS

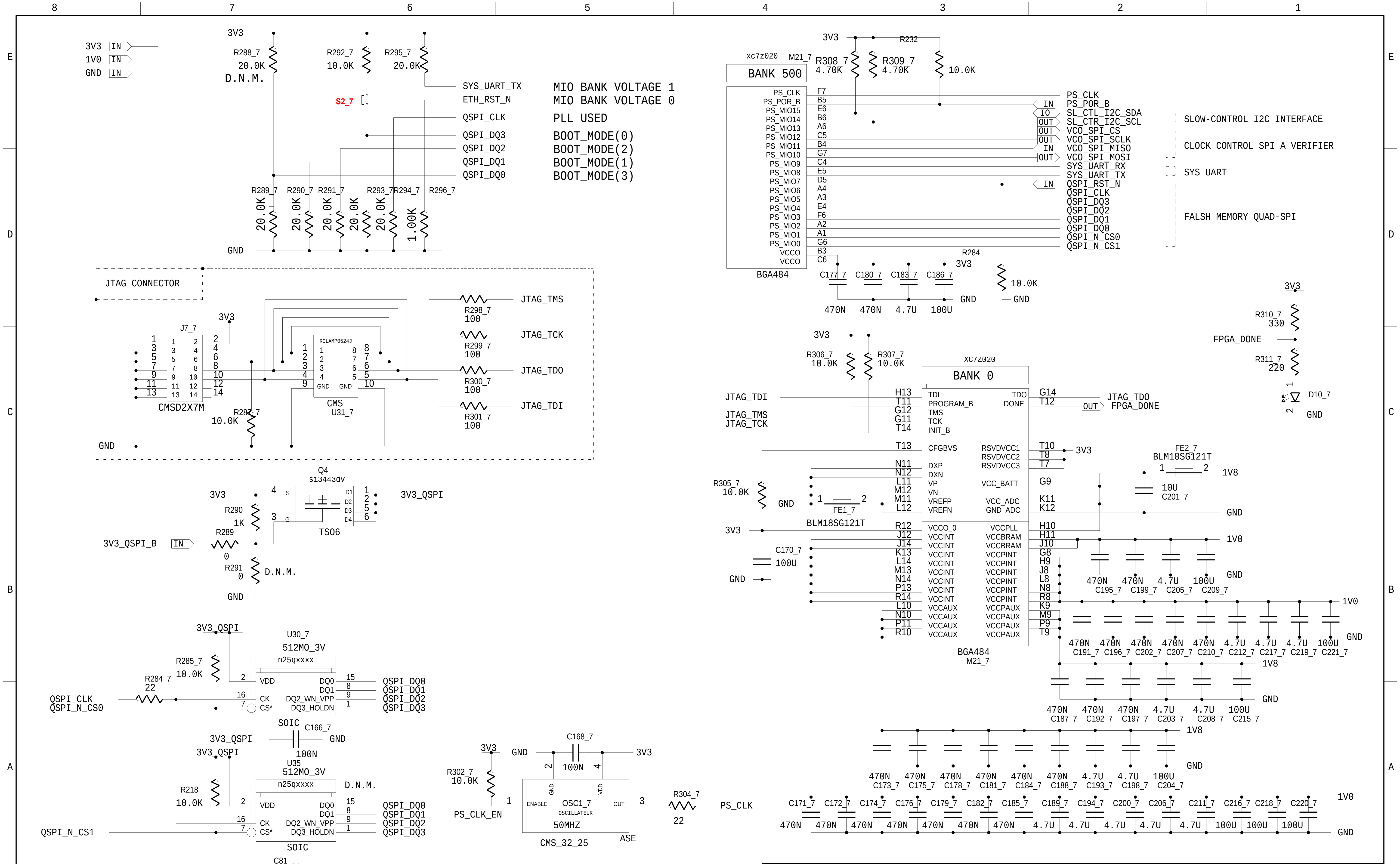
3V3 IN
1V0 IN
GND IN
3V3
R288_7 20.0K D.N.M.
R292_7 10.0K
R295_7 20.0K
S2_7
SYS_UART_TX
ETH_RST_N
QSPI_CLK
QSPI_DQ3
QSPI_DQ2
QSPI_DQ1
QSPI_DQ0
MIO BANK VOLTAGE 1
MIO BANK VOLTAGE 0
PLL USED
BOOT_MODE(0)
BOOT_MODE(2)
BOOT_MODE(1)
BOOT_MODE(3)
R289_7 R290_7 R291_7 R293_7 R294_7 R296_7
20.0K 20.0K 20.0K 20.0K 20.0K 1.00K
GND
JTAG CONNECTOR
J7_7
CMSD2X7M
RCLAMP0524J
CMS U31_7
R287_7 10.0K
R298_7 100 JTAG_TMS
R299_7 100 JTAG_TCK
R300_7 100 JTAG_TDO
R301_7 100 JTAG_TDI
Q4 si3443dv
TS06
3V3_QSPI
R290 1K
R289 0
3V3_QSPI_B IN
R291 0 D.N.M.
3V3_QSPI
U30_7 512MO_3V n25qxxxx
R285_7 10.0K
R284_7 22
QSPI_CLK
QSPI_N_CS0
VDD CK CS* DQ0 DQ1 DQ2_WN_VPP DQ3_HOLDN
QSPI_DQ0 QSPI_DQ1 QSPI_DQ2 QSPI_DQ3
SOIC
C166_7 100N
U35 512MO_3V n25qxxxx D.N.M.
R218 10.0K
QSPI_N_CS1
C81 100N
R302_7 10.0K
PS_CLK_EN
C168_7 100N
OSC1_7 OSCILLATEUR 50MHZ
ENABLE OUT
CMS_32_25 ASE
R304_7 22 PS_CLK
I133 UART_USB
SYS_UART_TX UART_RX UART_TX SYS_UART_RX
xc7z020 M21_7
BANK 500
BGA484
R308_7 4.70K
R309_7 4.70K
R232 10.0K
PS_CLK PS_POR_B PS_MIO15 PS_MIO14 PS_MIO13 PS_MIO12 PS_MIO11 PS_MIO10 PS_MIO9 PS_MIO8 PS_MIO7 PS_MIO6 PS_MIO5 PS_MIO4 PS_MIO3 PS_MIO2 PS_MIO1 PS_MIO0 VCCO VCCO
F7 B5 E6 B6 A6 C5 B4 G7 C4 E5 D5 A4 A3 E4 F6 A2 A1 G6 B3 C6
PS_CLK
IN PS_POR_B
IO SL_CTL_I2C_SDA
OUT SL_CTR_I2C_SCL
OUT VCO_SPI_CS
OUT VCO_SPI_SCLK
IN VCO_SPI_MISO
OUT VCO_SPI_MOSI
SYS_UART_RX
SYS_UART_TX
IN QSPI_RST_N
QSPI_CLK
QSPI_DQ3
QSPI_DQ2
QSPI_DQ1
QSPI_DQ0
QSPI_N_CS0
QSPI_N_CS1
SLOW-CONTROL I2C INTERFACE
CLOCK CONTROL SPI A VERIFIER
SYS UART
FALSH MEMORY QUAD-SPI
R284 10.0K
C177_7 C180_7 C183_7 C186_7
470N 470N 4.7U 100U
3V3
R310_7 330
FPGA_DONE
R311_7 220
D10_7
R306_7 10.0K
R307_7 10.0K
XC7Z020
BANK 0
JTAG_TDI
JTAG_TMS
JTAG_TCK
H13 T11 G12 G11 T14
TDI PROGRAM_B TMS TCK INIT_B
TDO DONE
G14 T12
JTAG_TDO
OUT FPGA_DONE
T13 CFGBVS
RSVDVCC1 RSVDVCC2 RSVDVCC3
T10 T8 T7
R305_7 10.0K
N11 N12 L11 M12 M11 L12
DXP DXN VP VN VREFP VREFN
FE1_7 BLM18SG121T
VCC_BATT VCC_ADC GND_ADC
G9 K11 K12
FE2_7 BLM18SG121T
1V8
C201_7 10U
C170_7 100U
R12 J12 J14 K13 L14 M13 N14 P13 R14 L10 N10 P11 R10
VCCO_0 VCCINT VCCAUX
VCCPLL VCCBRAM VCCPINT VCCPAUX
H10 H11 J10 G8 H9 J8 L8 N8 R8 K9 M9 P9 T9
BGA484 M21_7
C195_7 C199_7 C205_7 C209_7
470N 470N 4.7U 100U
C191_7 C196_7 C202_7 C207_7 C210_7 C212_7 C217_7 C219_7 C221_7
470N 470N 470N 470N 470N 4.7U 4.7U 4.7U 100U
C187_7 C192_7 C197_7 C203_7 C208_7 C215_7
470N 470N 470N 4.7U 4.7U 100U
C173_7 C175_7 C178_7 C181_7 C184_7 C188_7 C193_7 C198_7 C204_7
470N 470N 470N 470N 470N 470N 4.7U 4.7U 100U
C171_7 C172_7 C174_7 C176_7 C179_7 C182_7 C185_7 C189_7 C194_7 C200_7 C206_7 C211_7 C216_7 C218_7 C220_7
470N 470N 470N 470N 470N 470N 470N 4.7U 4.7U 4.7U 4.7U 4.7U 100U 100U 100U
1V0
8 7 6 5 4 3 2 1
E D C B A

REF:	/CAO-PROJETS/SPB16X/LAGORIO/AUGER/SDEU/IE00/

LPSC
53, AVENUE DES MARTYRS
38026 GRENOBLE CEDEX
+33 (0)4.76.28.00.00

ETUDE:	SDEU	PAGE:	23/32
DESSIN:	EL & JB	DATE:	22/03/2016

DDR2_FPGA
QSPI, JTAG,RESET,CLOCK, WATCHDOG

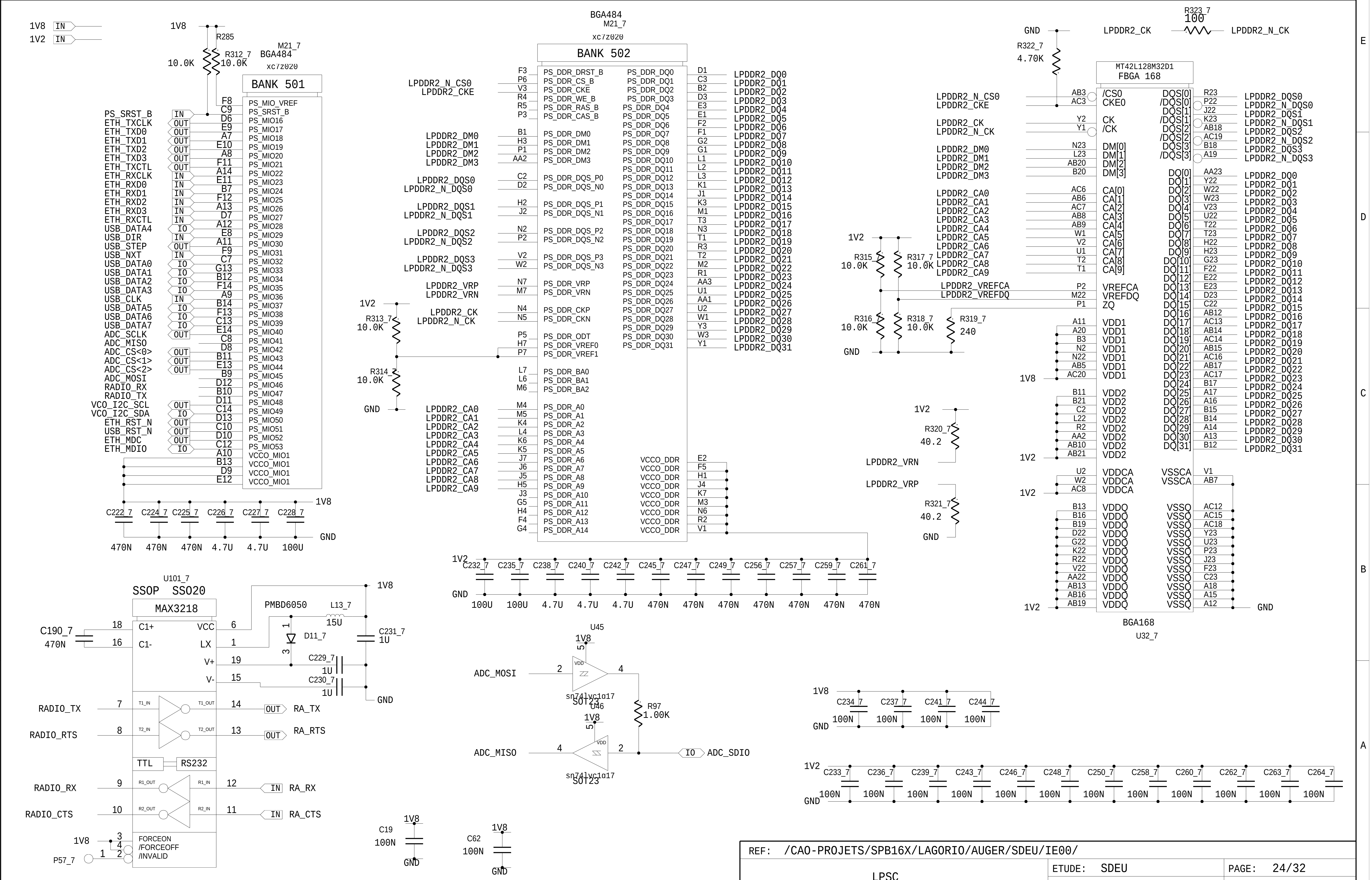
1V8 IN
1V2 IN
1V8
R285 10.0K
R312_7 10.0K
M21_7 BGA484 xc7z020
BANK 501
PS_SRST_B IN C9
ETH_TXCLK OUT D6
ETH_TXD0 OUT E9
ETH_TXD1 OUT A7
ETH_TXD2 OUT E10
ETH_TXD3 OUT A8
ETH_TXCTL OUT F11
ETH_RXCLK IN A14
ETH_RXD0 IN E11
ETH_RXD1 IN B7
ETH_RXD2 IN F12
ETH_RXD3 IN A13
ETH_RXCTL IN D7
USB_DATA4 IO A12
USB_DIR IN E8
USB_STEP OUT A11
USB_NXT IN F9
USB_DATA0 IO C7
USB_DATA1 IO G13
USB_DATA2 IO B12
USB_DATA3 IO F14
USB_CLK IN A9
USB_DATA5 IO B14
USB_DATA6 IO F13
USB_DATA7 IO C13
ADC_SCLK OUT E14
ADC_MISO C8
ADC_CS<0> OUT D8
ADC_CS<1> OUT B11
ADC_CS<2> OUT E13
ADC_MOSI B9
RADIO_RX D12
RADIO_TX B10
VCO_I2C_SCL OUT D11
VCO_I2C_SDA IO C14
ETH_RST_N OUT D13
USB_RST_N OUT C10
ETH_MDC OUT D10
ETH_MDIO IO C12
F8 PS_MIO_VREF
PS_SRST_B
PS_MIO16 … PS_MIO53
A10 B13 D9 E12 VCCO_MIO1
C222_7 C224_7 C225_7 C226_7 C227_7 C228_7
470N 470N 470N 4.7U 4.7U 100U
1V8 GND
BGA484 M21_7 xc7z020
BANK 502
F3 PS_DDR_DRST_B
LPDDR2_N_CS0 P6 PS_DDR_CS_B
LPDDR2_CKE V3 PS_DDR_CKE
R4 PS_DDR_WE_B
R5 PS_DDR_RAS_B
P3 PS_DDR_CAS_B
LPDDR2_DM0 B1 PS_DDR_DM0
LPDDR2_DM1 H3 PS_DDR_DM1
LPDDR2_DM2 P1 PS_DDR_DM2
LPDDR2_DM3 AA2 PS_DDR_DM3
LPDDR2_DQS0 C2 PS_DDR_DQS_P0
LPDDR2_N_DQS0 D2 PS_DDR_DQS_N0
LPDDR2_DQS1 H2 PS_DDR_DQS_P1
LPDDR2_N_DQS1 J2 PS_DDR_DQS_N1
LPDDR2_DQS2 N2 PS_DDR_DQS_P2
LPDDR2_N_DQS2 P2 PS_DDR_DQS_N2
LPDDR2_DQS3 V2 PS_DDR_DQS_P3
LPDDR2_N_DQS3 W2 PS_DDR_DQS_N3
LPDDR2_VRP N7 PS_DDR_VRP
LPDDR2_VRN M7 PS_DDR_VRN
LPDDR2_CK N4 PS_DDR_CKP
LPDDR2_N_CK N5 PS_DDR_CKN
P5 PS_DDR_ODT
H7 PS_DDR_VREF0
P7 PS_DDR_VREF1
L7 PS_DDR_BA0
L6 PS_DDR_BA1
M6 PS_DDR_BA2
LPDDR2_CA0 M4 PS_DDR_A0
LPDDR2_CA1 M5 PS_DDR_A1
LPDDR2_CA2 K4 PS_DDR_A2
LPDDR2_CA3 L4 PS_DDR_A3
LPDDR2_CA4 K6 PS_DDR_A4
LPDDR2_CA5 K5 PS_DDR_A5
LPDDR2_CA6 J7 PS_DDR_A6
LPDDR2_CA7 J6 PS_DDR_A7
LPDDR2_CA8 J5 PS_DDR_A8
LPDDR2_CA9 H5 PS_DDR_A9
J3 PS_DDR_A10
G5 PS_DDR_A11
H4 PS_DDR_A12
F4 PS_DDR_A13
G4 PS_DDR_A14
PS_DDR_DQ0 D1 LPDDR2_DQ0
PS_DDR_DQ1 C3 LPDDR2_DQ1
PS_DDR_DQ2 B2 LPDDR2_DQ2
PS_DDR_DQ3 D3 LPDDR2_DQ3
PS_DDR_DQ4 E3 LPDDR2_DQ4
PS_DDR_DQ5 E1 LPDDR2_DQ5
PS_DDR_DQ6 F2 LPDDR2_DQ6
PS_DDR_DQ7 F1 LPDDR2_DQ7
PS_DDR_DQ8 G2 LPDDR2_DQ8
PS_DDR_DQ9 G1 LPDDR2_DQ9
PS_DDR_DQ10 L1 LPDDR2_DQ10
PS_DDR_DQ11 L2 LPDDR2_DQ11
PS_DDR_DQ12 L3 LPDDR2_DQ12
PS_DDR_DQ13 K1 LPDDR2_DQ13
PS_DDR_DQ14 J1 LPDDR2_DQ14
PS_DDR_DQ15 K3 LPDDR2_DQ15
PS_DDR_DQ16 M1 LPDDR2_DQ16
PS_DDR_DQ17 T3 LPDDR2_DQ17
PS_DDR_DQ18 N3 LPDDR2_DQ18
PS_DDR_DQ19 T1 LPDDR2_DQ19
PS_DDR_DQ20 R3 LPDDR2_DQ20
PS_DDR_DQ21 T2 LPDDR2_DQ21
PS_DDR_DQ22 M2 LPDDR2_DQ22
PS_DDR_DQ23 R1 LPDDR2_DQ23
PS_DDR_DQ24 AA3 LPDDR2_DQ24
PS_DDR_DQ25 U1 LPDDR2_DQ25
PS_DDR_DQ26 AA1 LPDDR2_DQ26
PS_DDR_DQ27 U2 LPDDR2_DQ27
PS_DDR_DQ28 W1 LPDDR2_DQ28
PS_DDR_DQ29 Y3 LPDDR2_DQ29
PS_DDR_DQ30 W3 LPDDR2_DQ30
PS_DDR_DQ31 Y1 LPDDR2_DQ31
VCCO_DDR E2 F5 H1 J4 K7 M3 N6 R2 V1
1V2 R313_7 10.0K
R314_7 10.0K GND
C232_7 C235_7 C238_7 C240_7 C242_7 C245_7 C247_7 C249_7 C256_7 C257_7 C259_7 C261_7
100U 100U 4.7U 4.7U 4.7U 470N 470N 470N 470N 470N 470N 470N
1V2 GND
GND R322_7 4.70K
R323_7 100 LPDDR2_CK LPDDR2_N_CK
MT42L128M32D1 FBGA 168
LPDDR2_N_CS0 AB3 /CS0
LPDDR2_CKE AC3 CKE0
LPDDR2_CK Y2 CK
LPDDR2_N_CK Y1 /CK
LPDDR2_DM0 N23 DM[0]
LPDDR2_DM1 L23 DM[1]
LPDDR2_DM2 AB20 DM[2]
LPDDR2_DM3 B20 DM[3]
LPDDR2_CA0 AC6 CA[0]
LPDDR2_CA1 AB6 CA[1]
LPDDR2_CA2 AC7 CA[2]
LPDDR2_CA3 AB8 CA[3]
LPDDR2_CA4 AB9 CA[4]
LPDDR2_CA5 W1 CA[5]
LPDDR2_CA6 V2 CA[6]
LPDDR2_CA7 U1 CA[7]
LPDDR2_CA8 T2 CA[8]
LPDDR2_CA9 T1 CA[9]
LPDDR2_VREFCA P2 VREFCA
LPDDR2_VREFDQ M22 VREFDQ
P1 ZQ
1V2 R315_7 10.0K R317_7 10.0K
R316_7 10.0K R318_7 10.0K R319_7 240 GND
1V8 A11 A20 B3 N2 N22 AB5 AC20 VDD1
B11 B21 C2 L22 R2 AA2 AB10 AB21 VDD2 1V2
U2 W2 AC8 VDDCA 1V2
B13 B16 B19 D22 G22 K22 R22 V22 AA22 AB13 AB16 AB19 VDDQ 1V2
DQS[0] R23 LPDDR2_DQS0
/DQS[0] P22 LPDDR2_N_DQS0
DQS[1] J22 LPDDR2_DQS1
/DQS[1] K23 LPDDR2_N_DQS1
DQS[2] AB18 LPDDR2_DQS2
/DQS[2] AC19 LPDDR2_N_DQS2
DQS[3] B18 LPDDR2_DQS3
/DQS[3] A19 LPDDR2_N_DQS3
DQ[0] AA23 LPDDR2_DQ0
DQ[1] Y22 LPDDR2_DQ1
DQ[2] W22 LPDDR2_DQ2
DQ[3] W23 LPDDR2_DQ3
DQ[4] V23 LPDDR2_DQ4
DQ[5] U22 LPDDR2_DQ5
DQ[6] T22 LPDDR2_DQ6
DQ[7] T23 LPDDR2_DQ7
DQ[8] H22 LPDDR2_DQ8
DQ[9] H23 LPDDR2_DQ9
DQ[10] G23 LPDDR2_DQ10
DQ[11] F22 LPDDR2_DQ11
DQ[12] E22 LPDDR2_DQ12
DQ[13] E23 LPDDR2_DQ13
DQ[14] D23 LPDDR2_DQ14
DQ[15] C22 LPDDR2_DQ15
DQ[16] AB12 LPDDR2_DQ16
DQ[17] AC13 LPDDR2_DQ17
DQ[18] AB14 LPDDR2_DQ18
DQ[19] AC14 LPDDR2_DQ19
DQ[20] AB15 LPDDR2_DQ20
DQ[21] AC16 LPDDR2_DQ21
DQ[22] AB17 LPDDR2_DQ22
DQ[23] AC17 LPDDR2_DQ23
DQ[24] B17 LPDDR2_DQ24
DQ[25] A17 LPDDR2_DQ25
DQ[26] A16 LPDDR2_DQ26
DQ[27] B15 LPDDR2_DQ27
DQ[28] B14 LPDDR2_DQ28
DQ[29] A14 LPDDR2_DQ29
DQ[30] A13 LPDDR2_DQ30
DQ[31] B12 LPDDR2_DQ31
VSSCA V1 AB7
VSSQ AC12 AC15 AC18 Y23 U23 P23 J23 F23 C23 A18 A15 A12 GND
BGA168 U32_7
1V2 R320_7 40.2 LPDDR2_VRN
LPDDR2_VRP R321_7 40.2 GND
U101_7 SSOP SS020 MAX3218
C190_7 470N 18 C1+ 16 C1-
6 VCC 1 LX 19 V+ 15 V-
1V8 PMBD6050 D11_7 L13_7 15U C231_7 1U
C229_7 1U C230_7 1U GND
RADIO_TX 7 T1_IN T1_OUT 14 OUT RA_TX
RADIO_RTS 8 T2_IN T2_OUT 13 OUT RA_RTS
TTL RS232
RADIO_RX 9 R1_OUT R1_IN 12 IN RA_RX
RADIO_CTS 10 R2_OUT R2_IN 11 IN RA_CTS
1V8 3 4 FORCEON /FORCEOFF
P57_7 1 2 /INVALID
C19 1V8 100N GND
C62 1V8 100N GND
U45 1V8 5 VDD ADC_MOSI 2 4 sn74lvc1g17 SOT23
R97 1.00K
U46 1V8 5 VDD ADC_MISO 4 2 sn74lvc1g17 SOT23 IO ADC_SDIO
1V8 C234_7 C237_7 C241_7 C244_7 100N 100N 100N 100N GND
1V2 C233_7 C236_7 C239_7 C243_7 C246_7 C248_7 C250_7 C258_7 C260_7 C262_7 C263_7 C264_7
100N 100N 100N 100N 100N 100N 100N 100N 100N 100N 100N 100N GND
8 7 6 5 4 3 2 1
E D C B A

REF: /CAO-PROJETS/SPB16X/LAGORIO/AUGER/SDEU/IE00/

LPSC
53, AVENUE DES MARTYRS
38026 GRENOBLE CEDEX
+33 (0)4.76.28.41.65

ETUDE:	SDEU	PAGE:	24/32
DESSIN:	EL & JB	DATE:	22/03/2016

DDR2_FPGA
LP-DDR2 & BANK 502

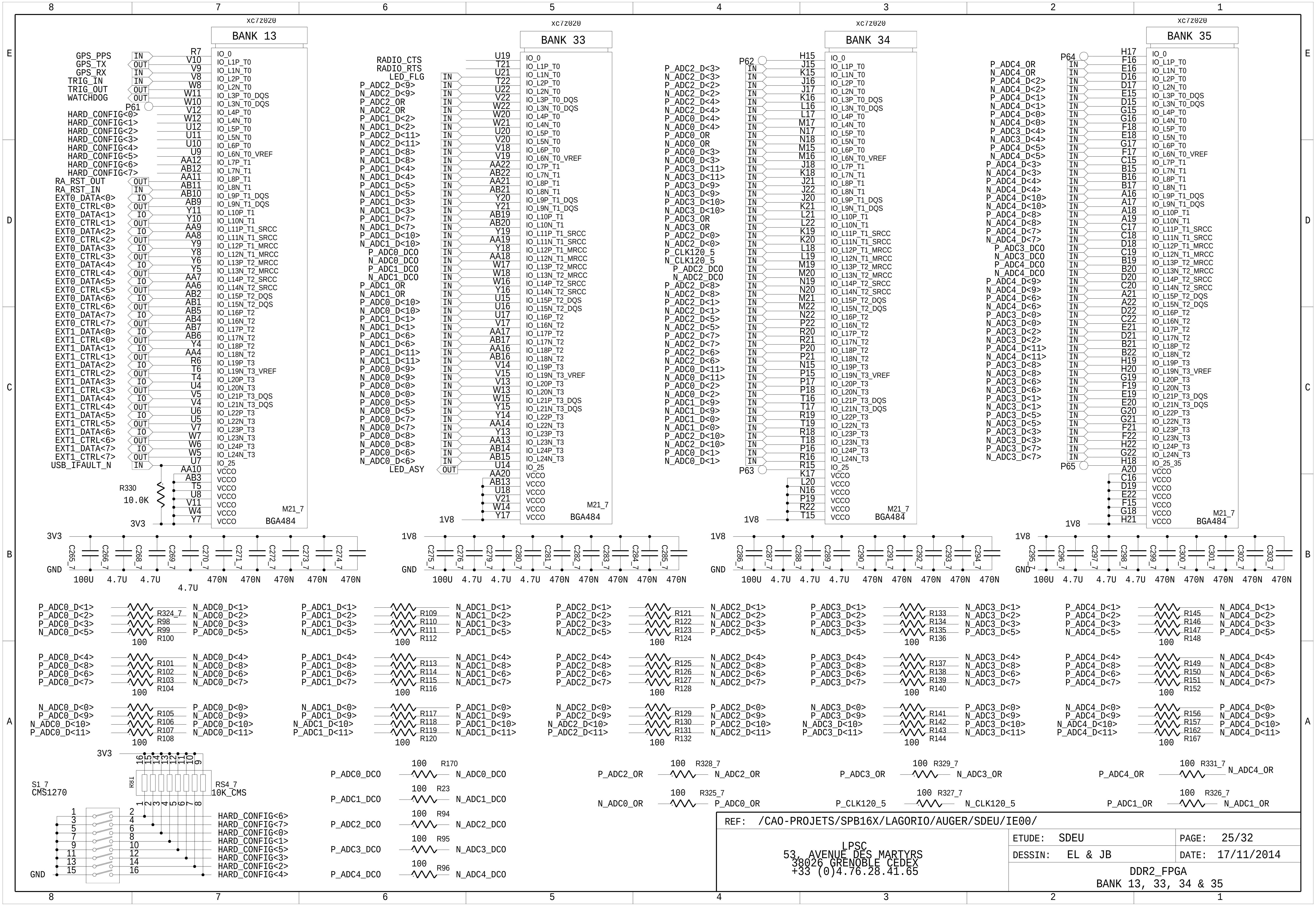

8
7
6
5
4
3
2
1
E
D
C
B
A
xc7z020
BANK 13
BANK 33
BANK 34
BANK 35
M21_7
BGA484
GPS_PPS
GPS_TX
GPS_RX
TRIG_IN
TRIG_OUT
WATCHDOG
P61
HARD_CONFIG<0>
HARD_CONFIG<1>
HARD_CONFIG<2>
HARD_CONFIG<3>
HARD_CONFIG<4>
HARD_CONFIG<5>
HARD_CONFIG<6>
HARD_CONFIG<7>
RA_RST_OUT
RA_RST_IN
EXT0_DATA<0>
EXT0_CTRL<0>
EXT1_DATA<0>
EXT1_CTRL<0>
USB_IFAULT_N
R330
10.0K
3V3
RADIO_CTS
RADIO_RTS
LED_FLG
LED_ASY
1V8
P62
P63
P64
P65
P_CLK120_5
N_CLK120_5
P_ADC0_DCO
N_ADC0_DCO
P_ADC1_DCO
N_ADC1_DCO
P_ADC2_DCO
N_ADC2_DCO
P_ADC3_DCO
N_ADC3_DCO
P_ADC4_DCO
N_ADC4_DCO
P_ADC0_OR
N_ADC0_OR
P_ADC1_OR
N_ADC1_OR
P_ADC2_OR
N_ADC2_OR
P_ADC3_OR
N_ADC3_OR
P_ADC4_OR
N_ADC4_OR
IN
OUT
IO
VCCO
GND
100U
4.7U
470N
C265_7
C266_7
C268_7
C269_7
C270_7
C271_7
C272_7
C273_7
C274_7
C275_7
C276_7
C279_7
C280_7
C281_7
C282_7
C283_7
C284_7
C285_7
C286_7
C287_7
C288_7
C289_7
C290_7
C291_7
C292_7
C293_7
C294_7
C295_7
C296_7
C297_7
C298_7
C299_7
C300_7
C301_7
C302_7
C303_7
100
R324_7
R98
R99
R100
R101
R102
R103
R104
R105
R106
R107
R108
R109
R110
R111
R112
R113
R114
R115
R116
R117
R118
R119
R120
R121
R122
R123
R124
R125
R126
R127
R128
R129
R130
R131
R132
R133
R134
R135
R136
R137
R138
R139
R140
R141
R142
R143
R144
R145
R146
R147
R148
R149
R150
R151
R152
R156
R157
R162
R167
R170
R23
R94
R95
R96
R328_7
R329_7
R331_7
R325_7
R327_7
R326_7
S1_7
CMS1270
RS4_7
10K_CMS
RN1

REF: /CAO-PROJETS/SPB16X/LAGORIO/AUGER/SDEU/IE00/

LPSC
53, AVENUE DES MARTYRS
38026 GRENOBLE CEDEX
+33 (0)4.76.28.41.65

ETUDE: SDEU
PAGE: 25/32
DESSIN: EL & JB
DATE: 17/11/2014

DDR2_FPGA
BANK 13, 33, 34 & 35

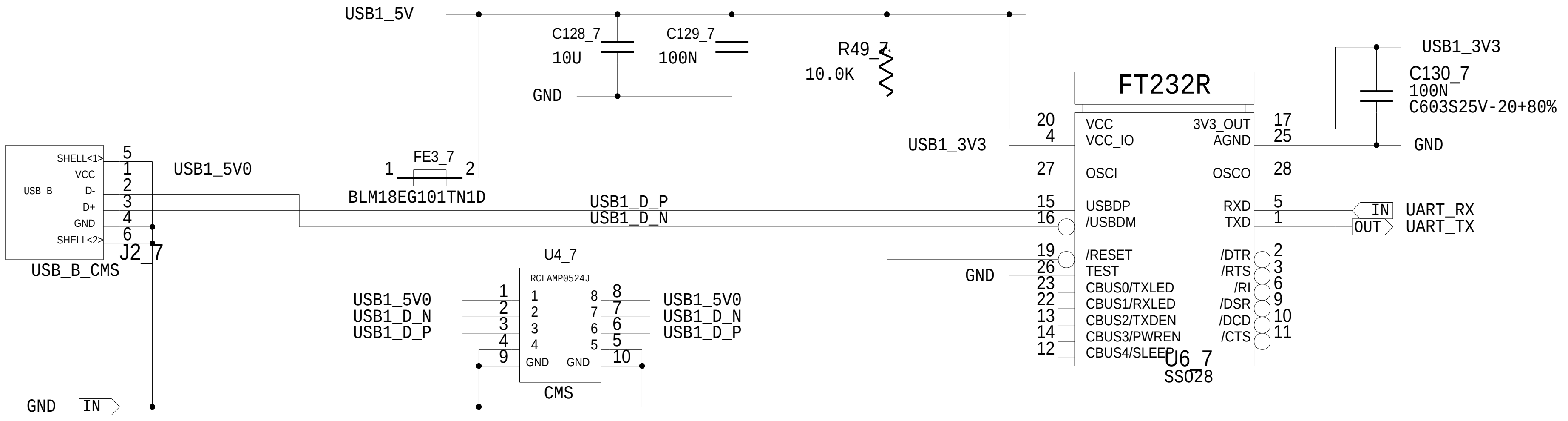
USB1_5V
C128_7
10U
C129_7
100N
GND
R49_7
10.0K
FT232R
USB1_3V3
C130_7
100N
C603S25V-20+80%
GND
SHELL<1>
VCC
USB_B
D-
D+
GND
SHELL<2>
5
1
2
3
4
6
J2_7
USB_B_CMS
USB1_5V0
FE3_7
1
2
BLM18EG101TN1D
USB1_D_P
USB1_D_N
20
4
27
15
16
19
26
23
22
13
14
12
VCC
VCC_IO
OSCI
USBDP
/USBDM
/RESET
TEST
CBUS0/TXLED
CBUS1/RXLED
CBUS2/TXDEN
CBUS3/PWREN
CBUS4/SLEEP
3V3_OUT
AGND
OSCO
RXD
TXD
/DTR
/RTS
/RI
/DSR
/DCD
/CTS
17
25
28
5
1
2
3
6
9
10
11
U6_7
SSO28
IN
UART_RX
OUT
UART_TX
U4_7
RCLAMP0524J
USB1_5V0
USB1_D_N
USB1_D_P
1
2
3
4
9
GND
GND
8
7
6
5
10
CMS
USB1_5V0
USB1_D_N
USB1_D_P
GND
IN

REF: /CAO-PROJETS/SPB16X/LAGORIO/AUGER/SDEU/IE00/

LPSC
53, AVENUE DES MARTYRS
38026 GRENOBLE CEDEX
+33 (0)4.76.28.41.65

ETUDE: SDEU	PAGE: 26/32
DESSIN: EL & JB	DATE: 17/03/2015
	UART / USB

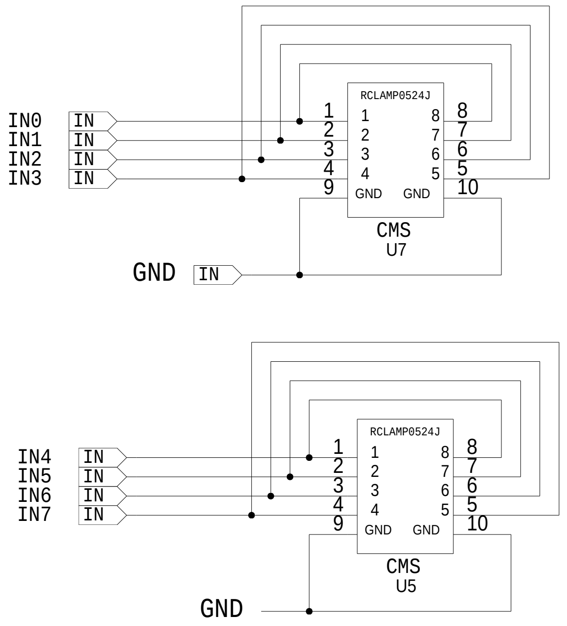
RCLAMP0524J
IN0
IN1
IN2
IN3
IN
1
2
3
4
9
8
7
6
5
10
GND
CMS
U7
GND
RCLAMP0524J
IN4
IN5
IN6
IN7
CMS
U5
GND

REF: /CAO-PROJETS/SPB16X/LAGORIO/AUGER/SDEU/IE00/

LPSC
53, AVENUE DES MARTYRS
38026 GRENOBLE CEDEX
+33 (0)4.76.28.00.00

ETUDE: SDEU
DESSIN: EL & JB
PAGE: 27/32
DATE: 30/01/2015

ESD 8 PINS PROTECTION
DB15 CONNECTORS

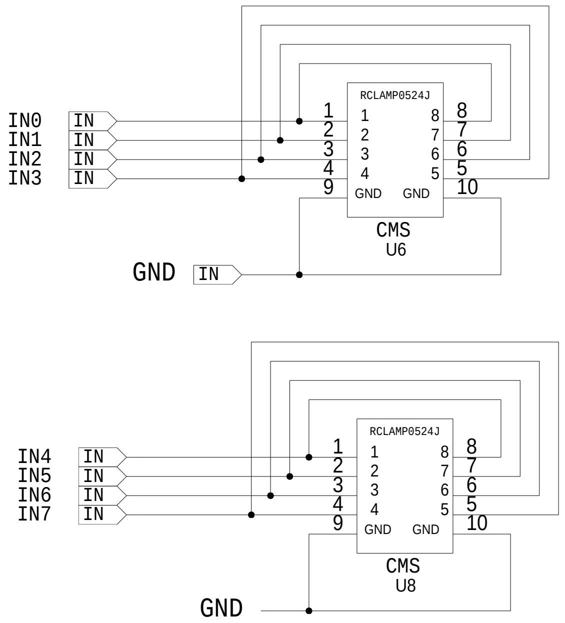
RCLAMP0524J
IN0
IN1
IN2
IN3
IN
1
2
3
4
9
8
7
6
5
10
GND
GND
CMS
U6
GND
RCLAMP0524J
IN4
IN5
IN6
IN7
CMS
U8
GND

REF: /CAO-PROJETS/SPB16X/LAGORIO/AUGER/SDEU/IE00/

LPSC
53, AVENUE DES MARTYRS
38026 GRENOBLE CEDEX
+33 (0)4.76.28.00.00

ETUDE: SDEU

PAGE: 28/32

DESSIN: EL & JB

DATE: 30/01/2015

ESD 8 PINS PROTECTION
DB15 CONNECTORS

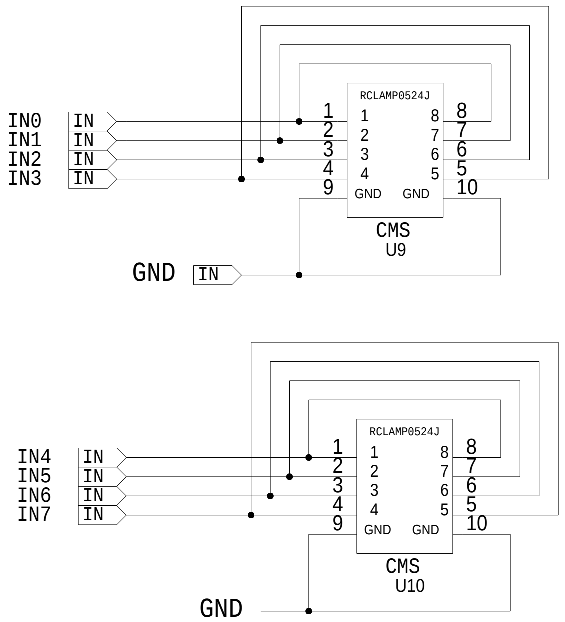
IN0
IN1
IN2
IN3
IN
IN
IN
IN
RCLAMP0524J
1
2
3
4
9
8
7
6
5
10
GND
GND
CMS
U9
GND
IN
IN4
IN5
IN6
IN7
IN
IN
IN
IN
RCLAMP0524J
1
2
3
4
9
8
7
6
5
10
GND
GND
CMS
U10
GND

REF: /CAO-PROJETS/SPB16X/LAGORIO/AUGER/SDEU/IE00/

LPSC
53, AVENUE DES MARTYRS
38026 GRENOBLE CEDEX
+33 (0)4.76.28.00.00

ETUDE: SDEU
DESSIN: EL & JB
PAGE: 29/32
DATE: 30/01/2015

ESD 8 PINS PROTECTION
DB15 CONNECTORS

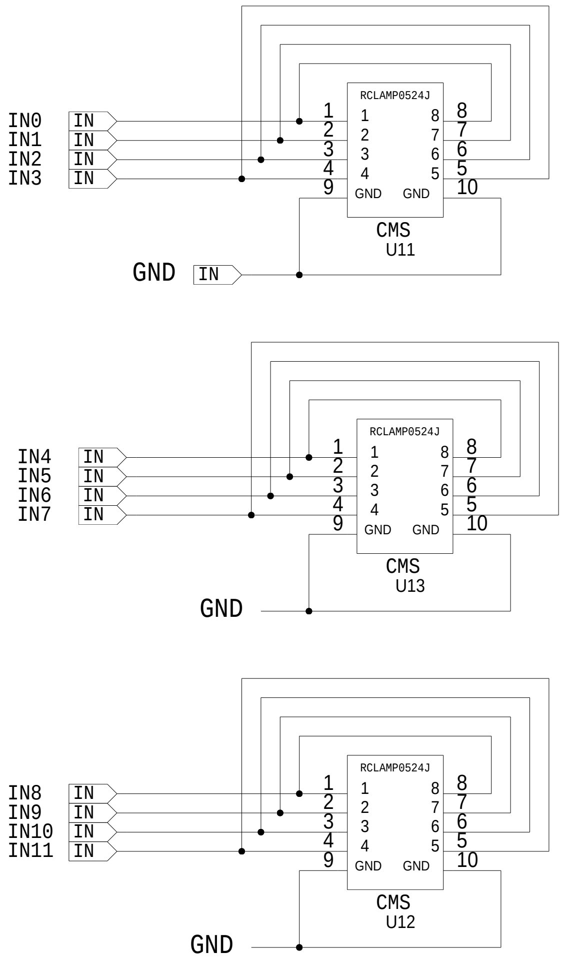
IN0
IN1
IN2
IN3
IN
RCLAMP0524J
1
2
3
4
9
8
7
6
5
10
GND
CMS
U11
GND
IN4
IN5
IN6
IN7
RCLAMP0524J
CMS
U13
GND
IN8
IN9
IN10
IN11
RCLAMP0524J
CMS
U12
GND

REF: /CAO-PROJETS/SPB16X/LAGORIO/AUGER/SDEU/IE00/

LPSC
53, AVENUE DES MARTYRS
38026 GRENOBLE CEDEX
+33 (0)4.76.28.00.00

ETUDE: SDEU
PAGE: 30/32
DESSIN: EL & JB
DATE: 02/07/2014

ESD 12 PINS PROTECTION
DB15 CONNECTORS

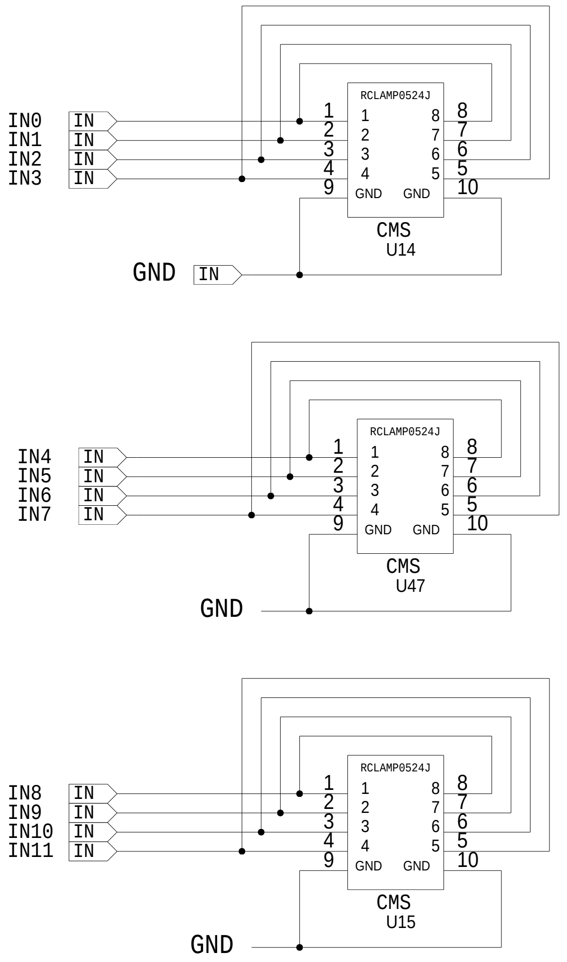
IN0
IN1
IN2
IN3
IN
RCLAMP0524J
1
2
3
4
9
8
7
6
5
10
GND
CMS
U14
GND
IN4
IN5
IN6
IN7
CMS
U47
IN8
IN9
IN10
IN11
CMS
U15

REF: /CAO-PROJETS/SPB16X/LAGORIO/AUGER/SDEU/IE00/

LPSC
53, AVENUE DES MARTYRS
38026 GRENOBLE CEDEX
+33 (0)4.76.28.00.00

ETUDE: SDEU

DESSIN: EL & JB

PAGE: 31/32

DATE: 02/07/2014

ESD 12 PINS PROTECTION
DB15 CONNECTORS

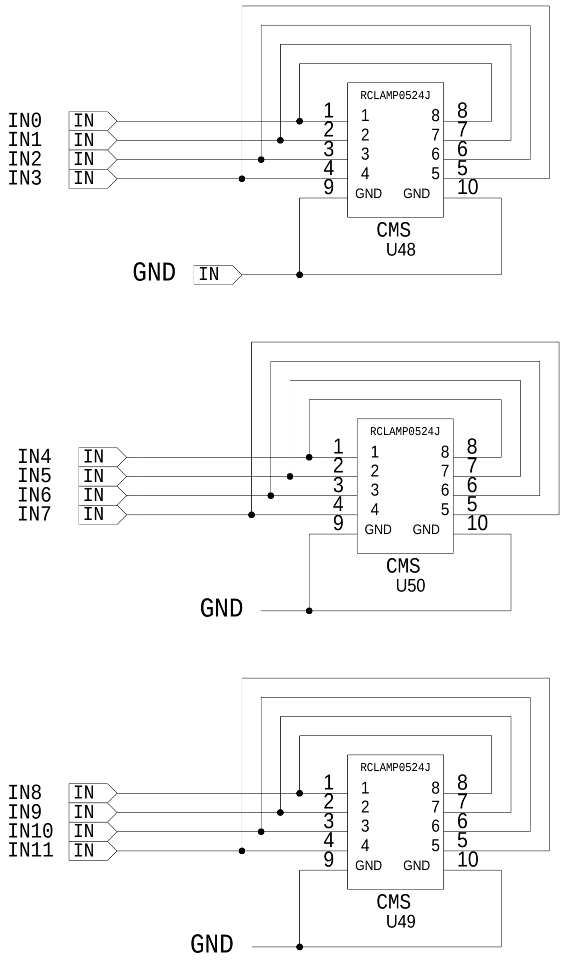
IN0
IN1
IN2
IN3
IN
RCLAMP0524J
1
2
3
4
9
8
7
6
5
10
GND
GND
CMS
U48
GND
IN4
IN5
IN6
IN7
RCLAMP0524J
CMS
U50
GND
IN8
IN9
IN10
IN11
RCLAMP0524J
CMS
U49
GND

REF: /CAO-PROJETS/SPB16X/LAGORIO/AUGER/SDEU/IE00/

LPSC
53, AVENUE DES MARTYRS
38026 GRENOBLE CEDEX
+33 (0)4.76.28.00.00

ETUDE: SDEU
PAGE: 32/32
DESSIN: EL & JB
DATE: 02/07/2014

ESD 12 PINS PROTECTION
DB15 CONNECTORS