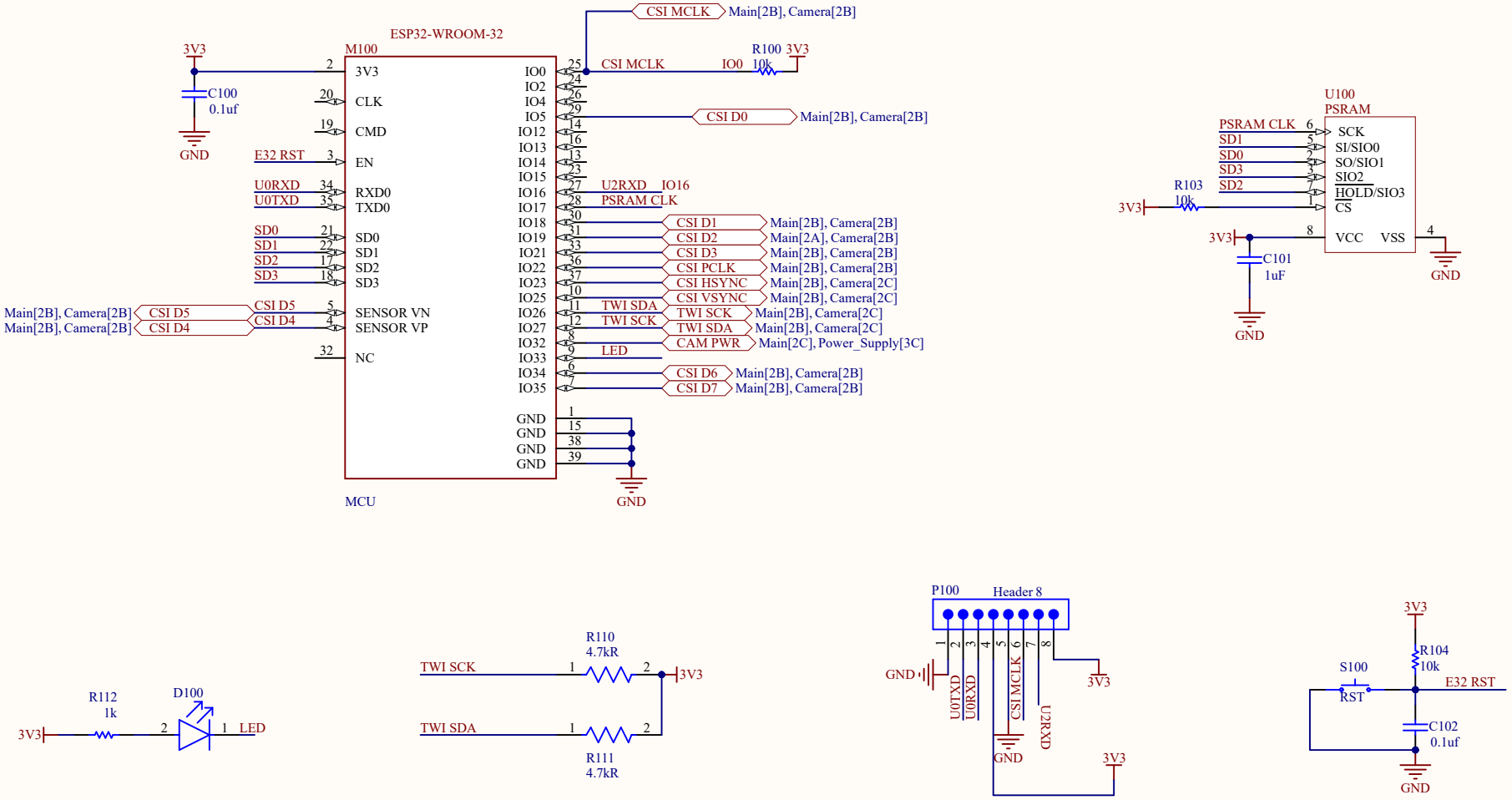

Title	MCU		
Size A4	Number P1_210608		Revision V1
Date: 5/30/2024		Sheet 2 of 4	
File: D:\PCBdefects\Altium\MCU.SchDoc		Drawn By: L.J.J.P. Silva	

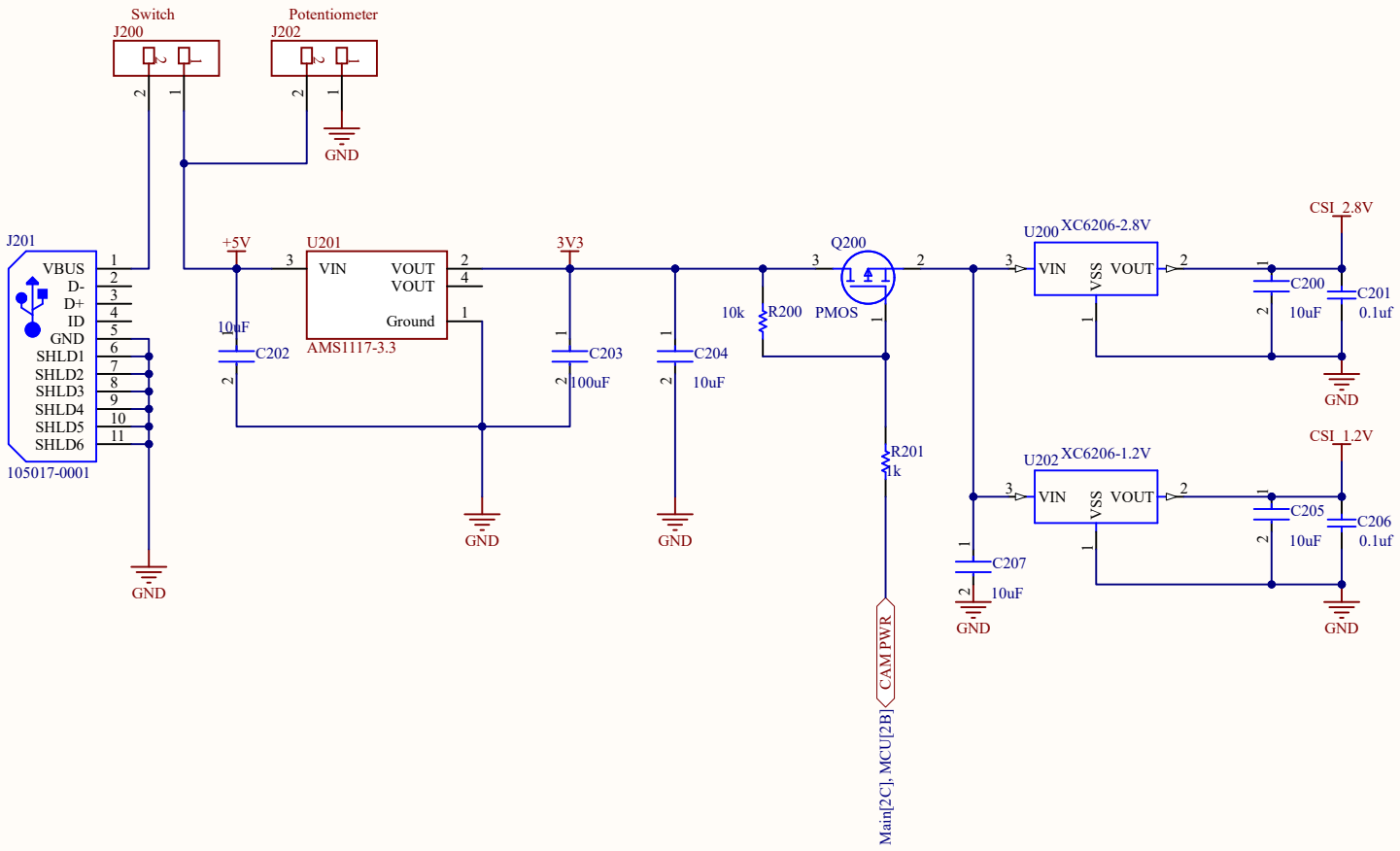

Title	Power Supply		
Size A4	Number P1_210608		Revision V1
Date: 5/30/2024		Sheet 3 of 4	
File: D:\UoM\..\Power_Supply.SchDoc		Drawn By: L.J.J.P. Silva	