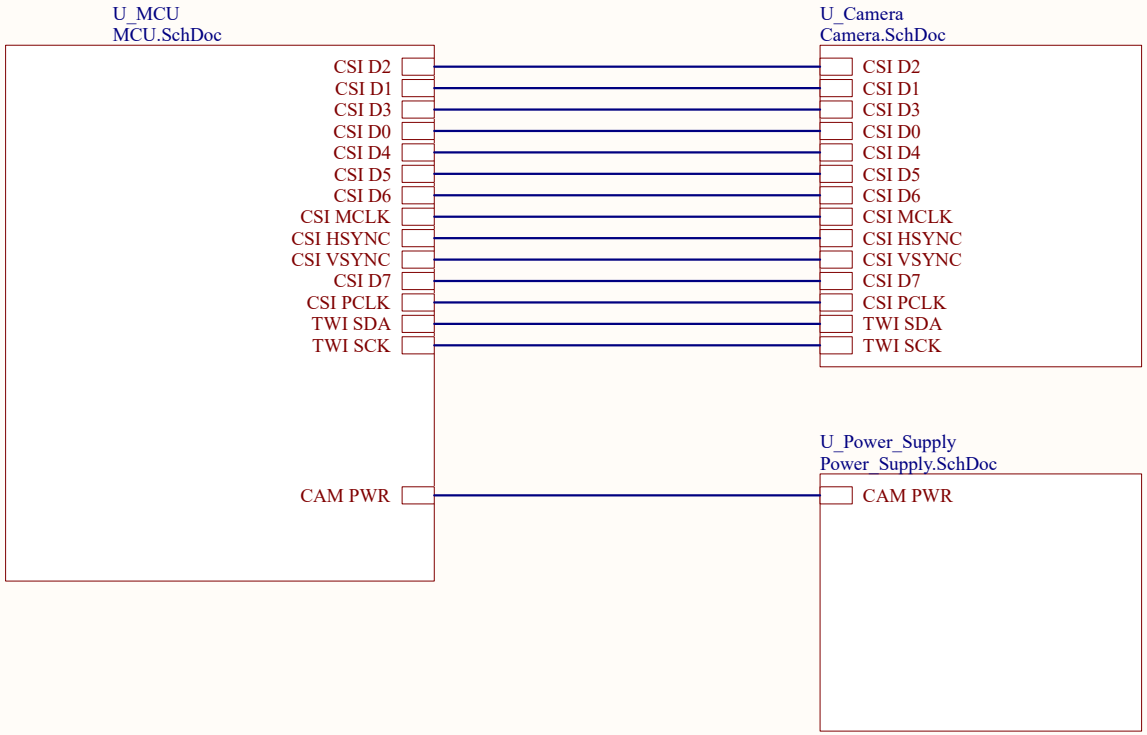
U_MCU
MCU.SchDoc
CSI D2
CSI D1
CSI D3
CSI D0
CSI D4
CSI D5
CSI D6
CSI MCLK
CSI HSYNC
CSI VSYNC
CSI D7
CSI PCLK
TWI SDA
TWI SCK
CAM PWR
U_Camera
Camera.SchDoc
CSI D2
CSI D1
CSI D3
CSI D0
CSI D4
CSI D5
CSI D6
CSI MCLK
CSI HSYNC
CSI VSYNC
CSI D7
CSI PCLK
TWI SDA
TWI SCK
U_Power_Supply
Power_Supply.SchDoc
CAM PWR

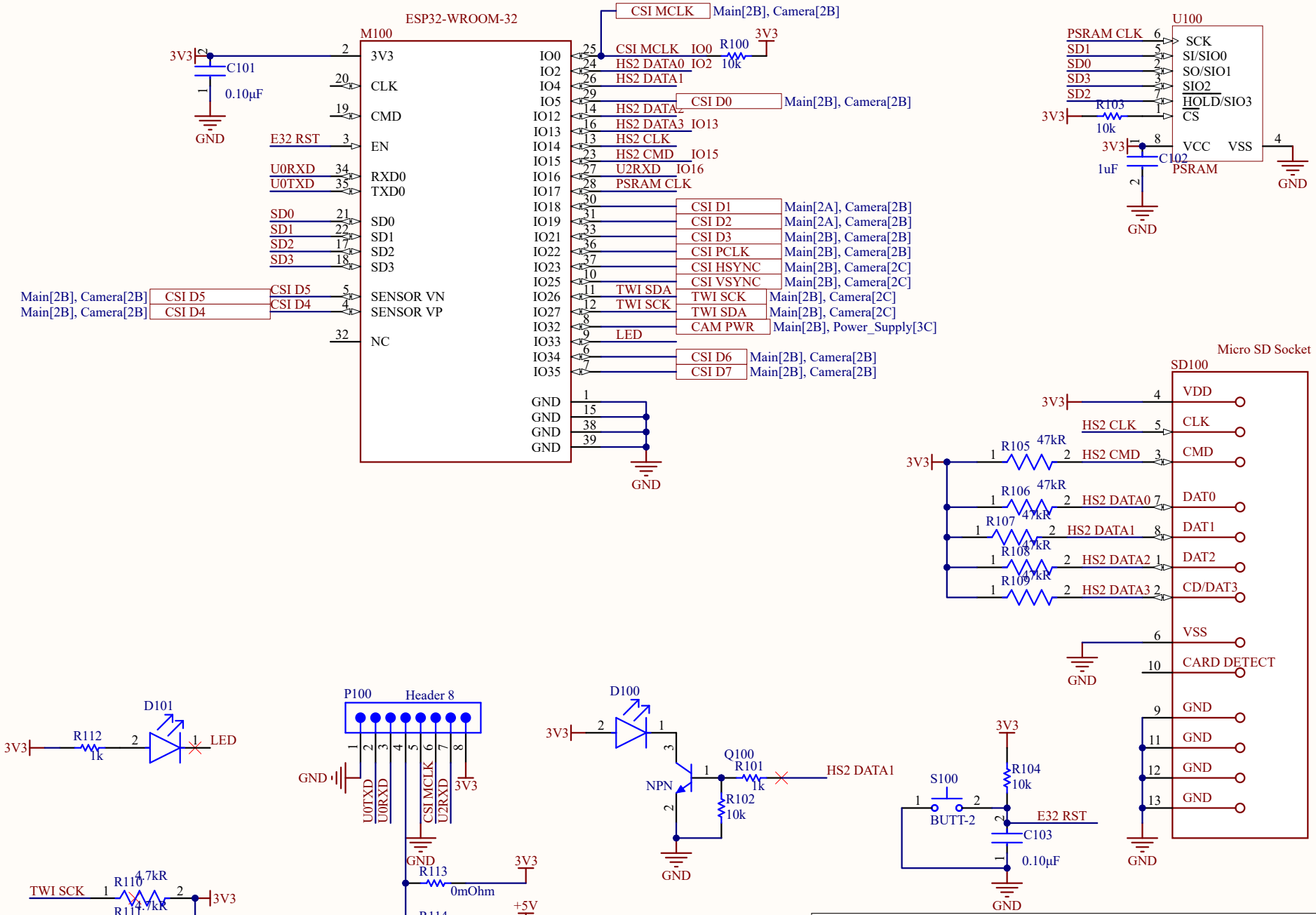

Title		
MCU		
Size: A	Number	Revision: 1.0
Date: 4/04/2024		Sheet 2 of 4
File: D:\PCBdefects\Altium\MCU.SchDoc		Drawn By: L.J.J.P. Silva

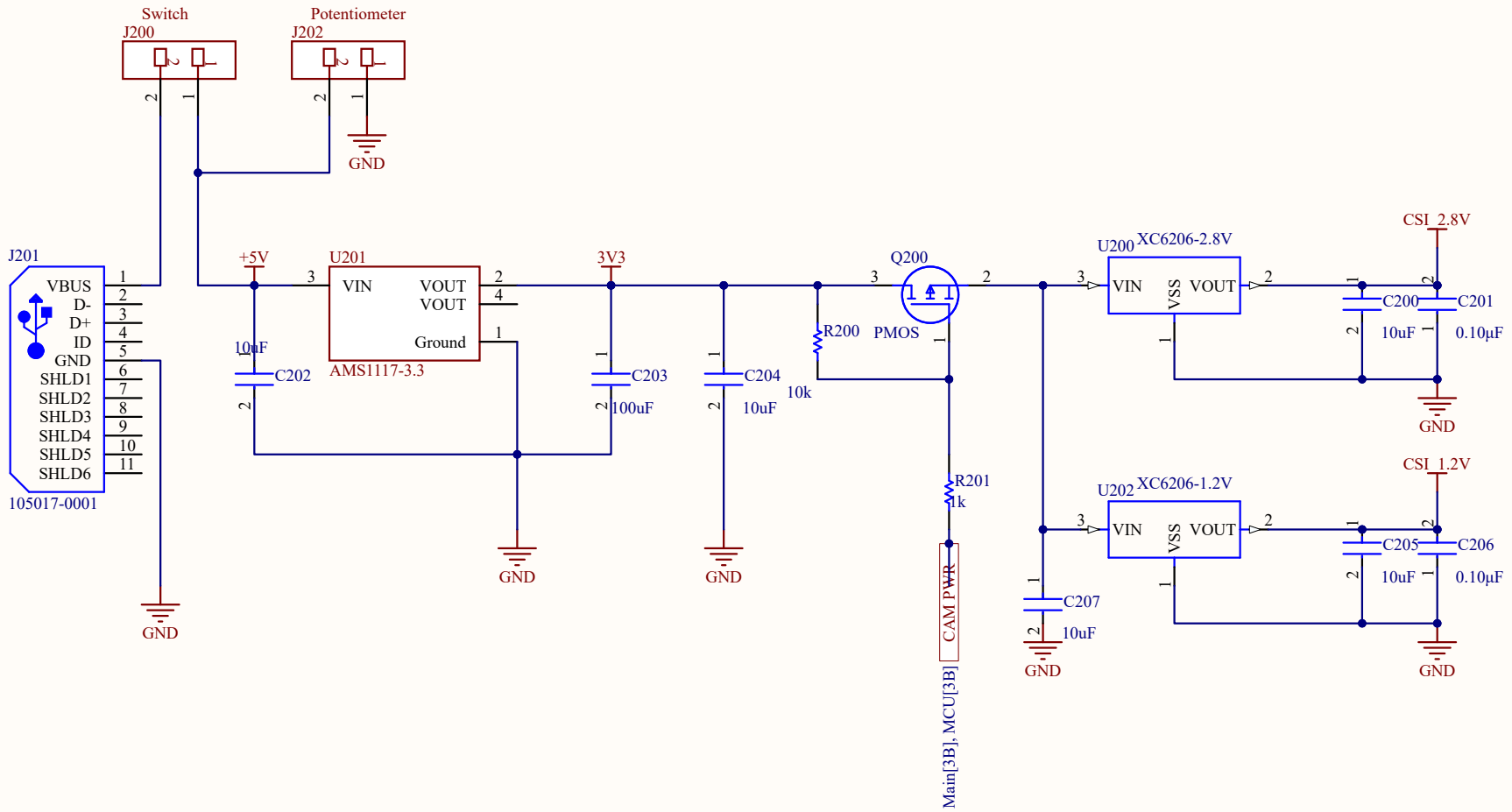

Title: Pwer Supply		
Size: A	Number	Revision: 1.0
Date: 4/04/2024		Sheet 3 of 4
File: D:\UoM\..\Power_Supply.SchDoc		Drawn By: L.J.J.P. Silva

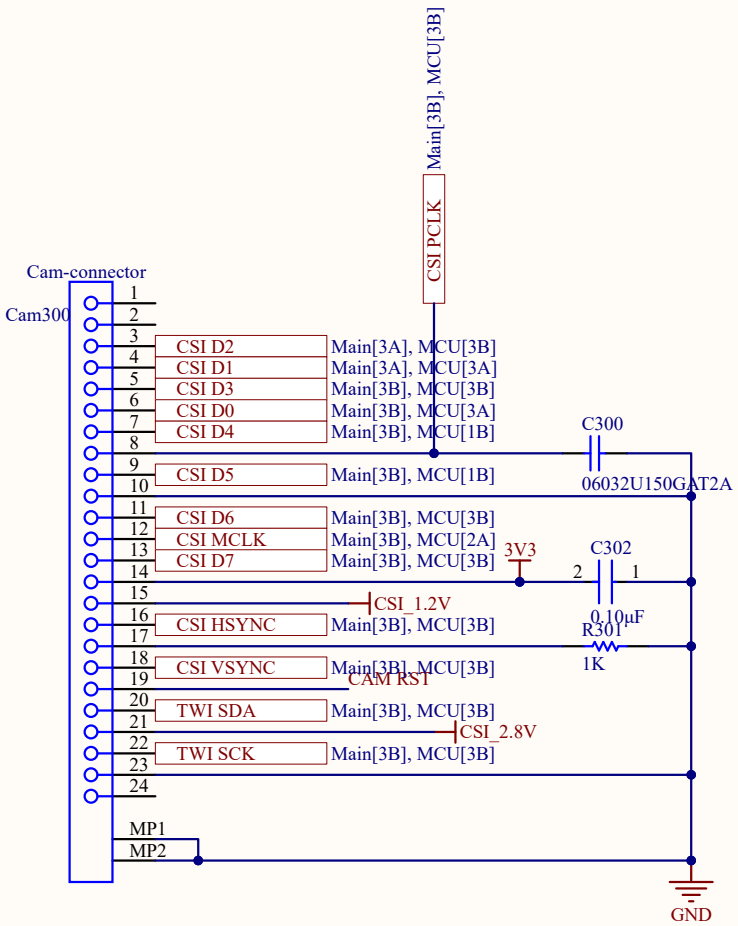

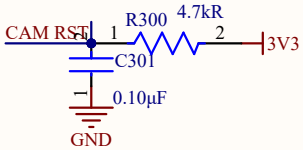

Title: Camera		
Size: A	Number	Revision: 1.0
Date: 4/04/2024	Sheet 4 of 4	
File: D:\UoM\..\Camera.SchDoc	Drawn By: L.J.J.P. Silva	