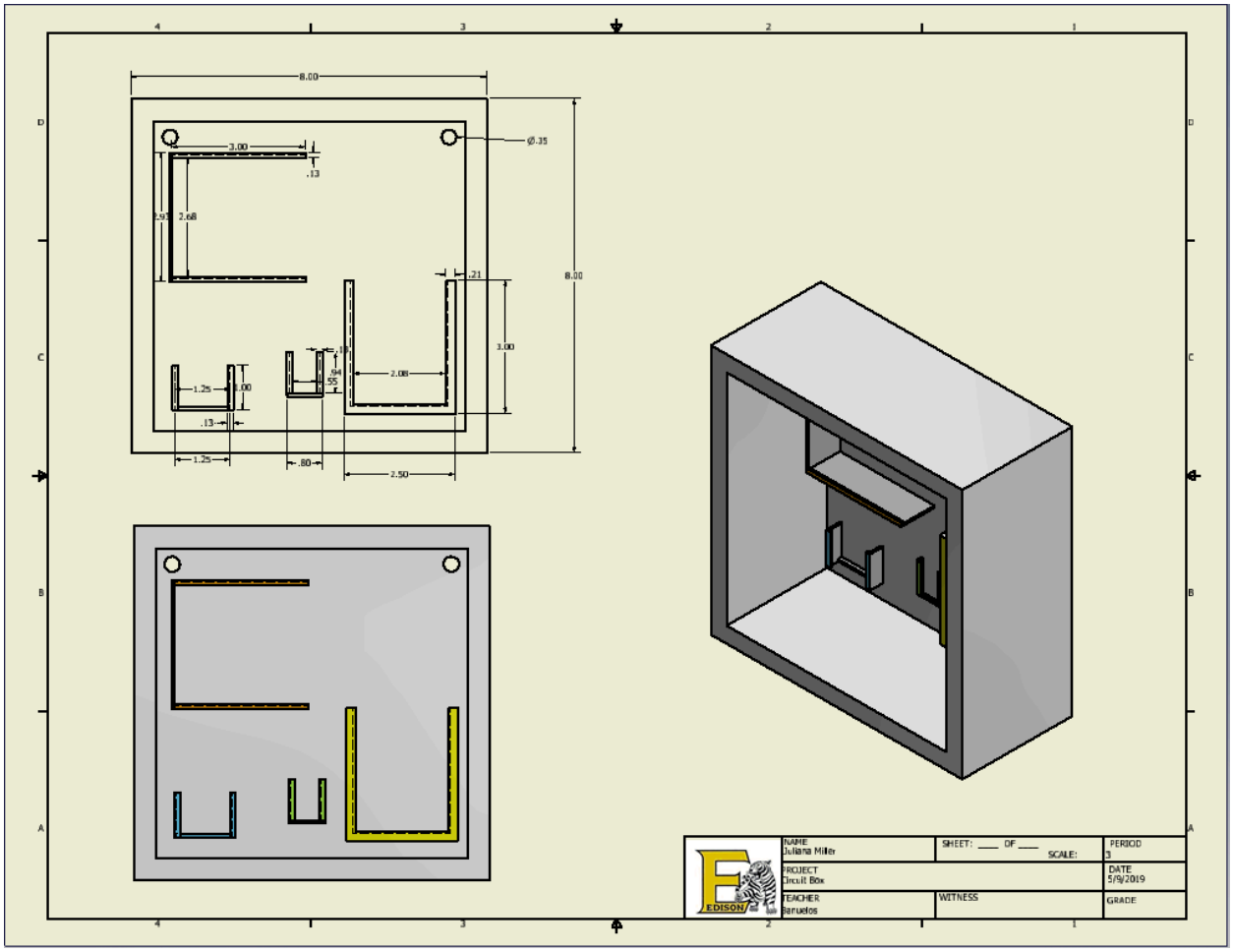
8.00
3.00
.13
Ø.35
2.93
2.68
.21
8.00
3.00
.13
.64
.55
2.08
1.25
1.00
.13
1.25
.80
2.50
NAME
Juliana Miller
SHEET: ___ OF ___
SCALE:
PERIOD
3
PROJECT
Circuit Box
DATE
5/9/2019
TEACHER
Barudos
WITNESS
GRADE
EDISON

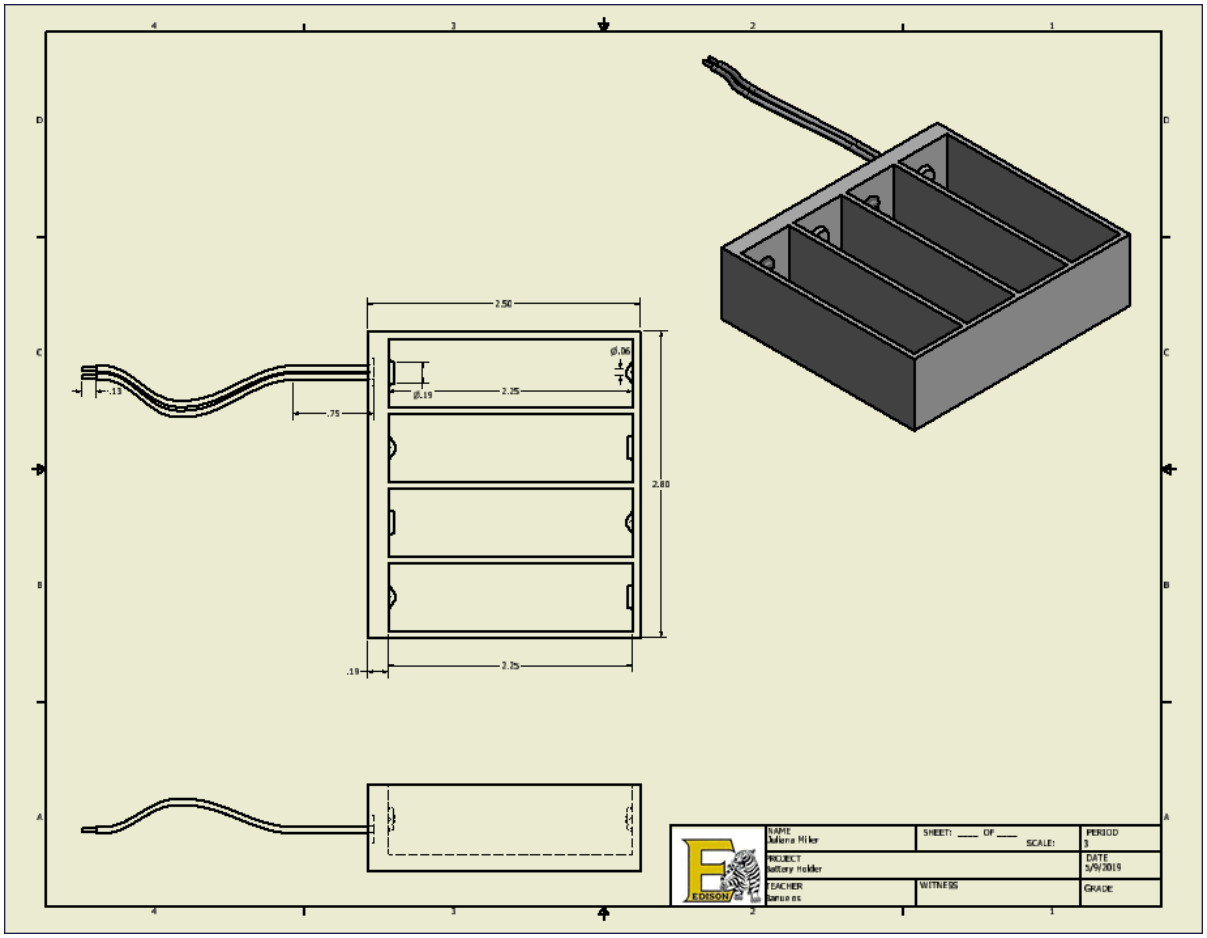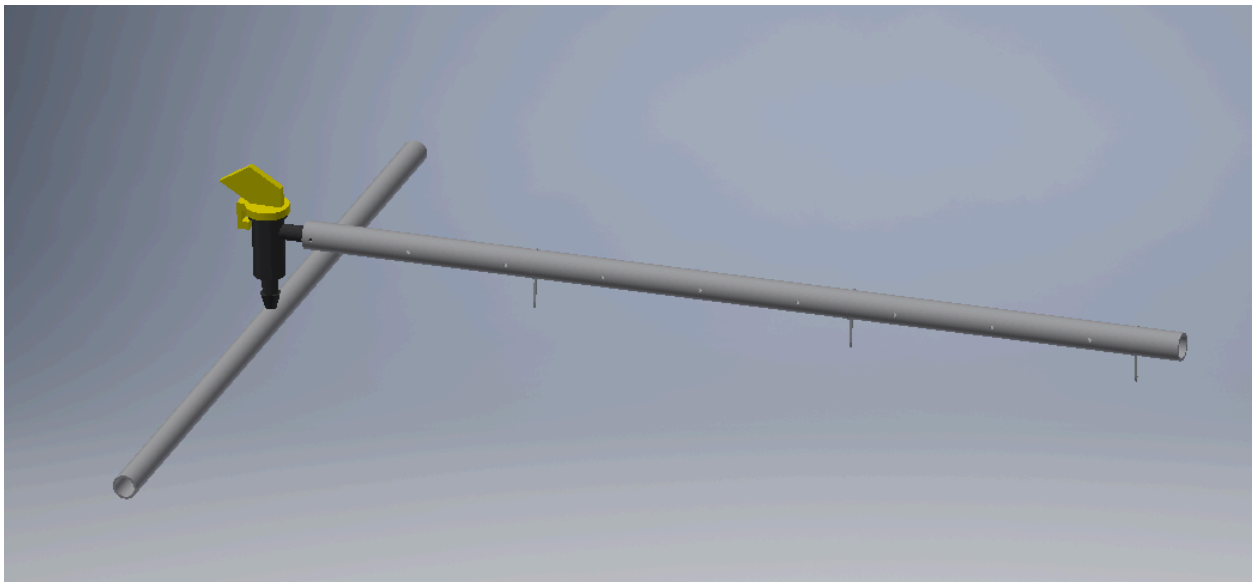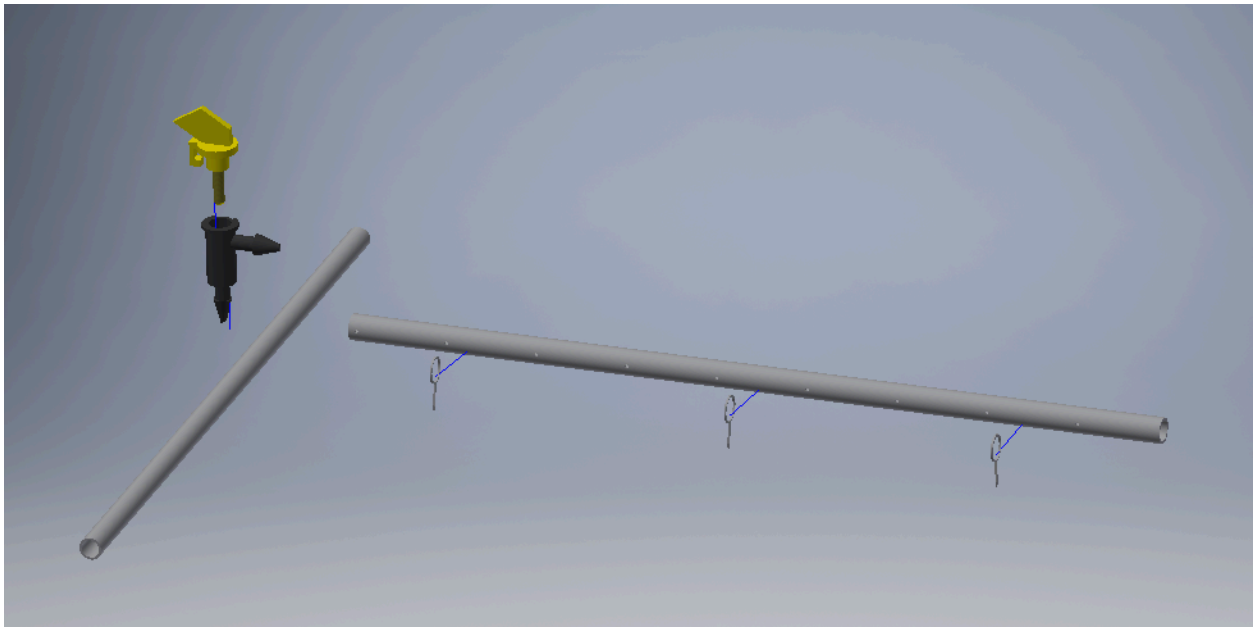
2.50
Ø.06
Ø.19
2.25
.75
.19
2.00
.19
2.25
NAME
Juliana Miker
SHEET: ___ OF ___
SCALE:
PERIOD
3
PROJECT
battery holder
DATE
5/9/2019
TEACHER
Sanuanes
WITNESS
GRADE
EDISON