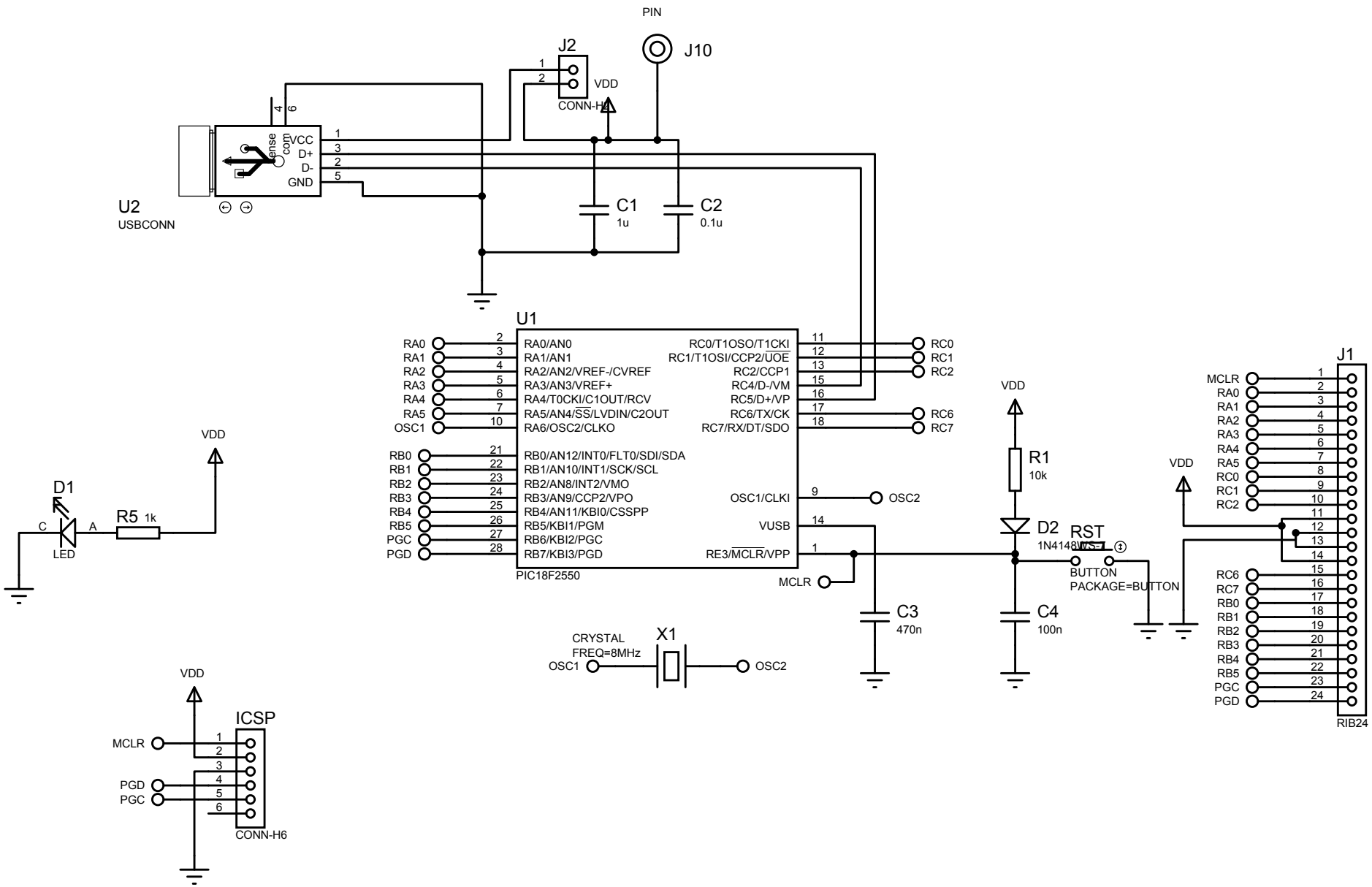
PIN
J10
J2
CONN-H4
VDD
U2
USBCONN
VCC
D+
D-
GND
C1
1u
C2
0.1u
U1
PIC18F2550
RA0/AN0
RA1/AN1
RA2/AN2/VREF-/CVREF
RA3/AN3/VREF+
RA4/T0CKI/C1OUT/RCV
RA5/AN4/SS/LVDIN/C2OUT
RA6/OSC2/CLKO
RB0/AN12/INT0/FLT0/SDI/SDA
RB1/AN10/INT1/SCK/SCL
RB2/AN8/INT2/VMO
RB3/AN9/CCP2/VPO
RB4/AN11/KBI0/CSSPP
RB5/KBI1/PGM
RB6/KBI2/PGC
RB7/KBI3/PGD
RC0/T1OSO/T1CKI
RC1/T1OSI/CCP2/UOE
RC2/CCP1
RC4/D-/VM
RC5/D+/VP
RC6/TX/CK
RC7/RX/DT/SDO
OSC1/CLKI
VUSB
RE3/MCLR/VPP
OSC1
OSC2
MCLR
RC0
RC1
RC2
RC6
RC7
D1
LED
R5 1k
R1
10k
D2
1N4148WS-7
RST
BUTTON
PACKAGE=BUTTON
C3
470n
C4
100n
CRYSTAL
FREQ=8MHz
X1
J1
RIB24
ICSP
CONN-H6
PGD
PGC