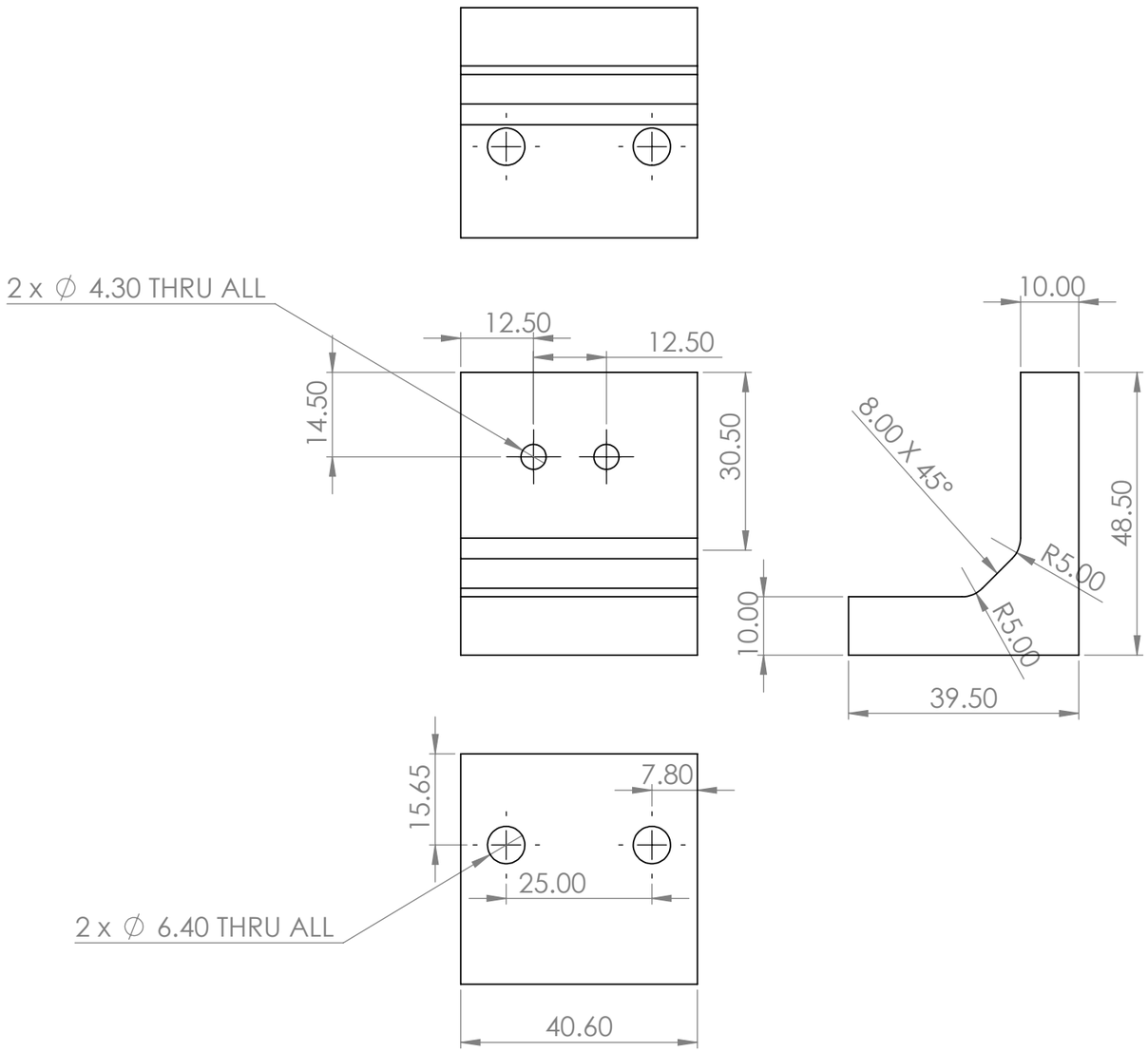

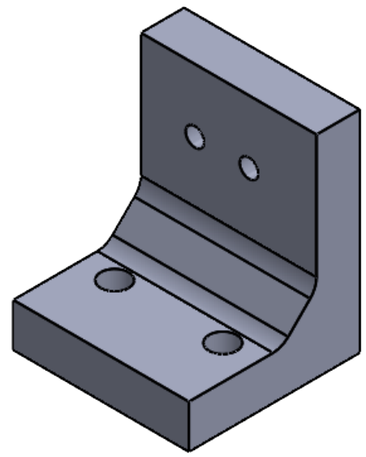

Date: 2021 08 11	LIDARIS LIDT Service
Designed by Salvijus Ulevicius	
Checked by	
Part: LID2021015	
Material: Aluminum 6082 T6 / 5083	
Coating: Anodized - Black	
Quantity: 1 Qty.	
Tolerance: H12, h12, IT 12/2	**Sheet** 1 / 1