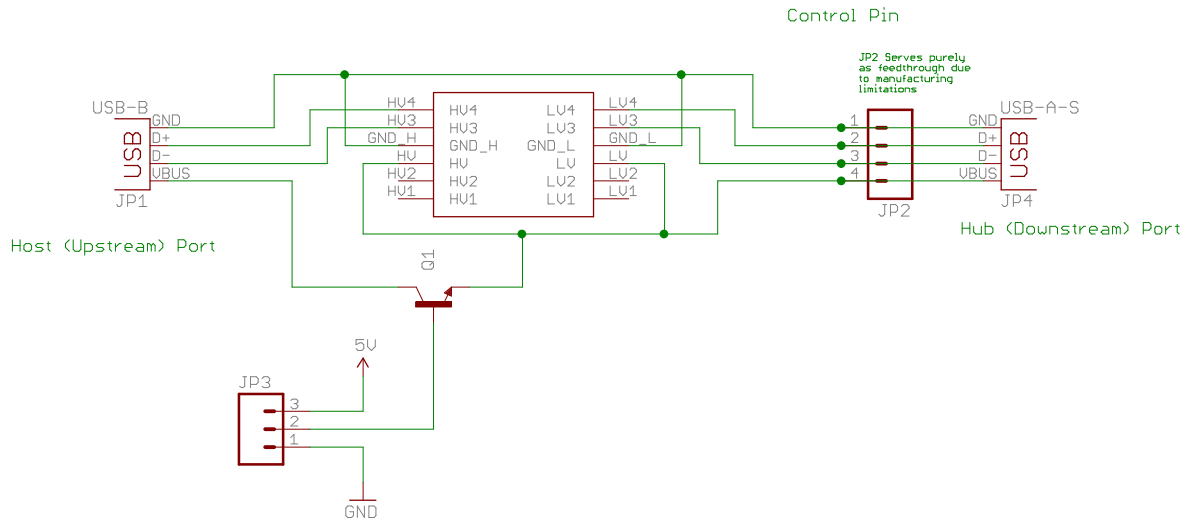

TITLE: USB_Interlock	
Document Number:	REV:
Date: 9/7/15 2:54 PM	Sheet: 1/1