ERAM
Company Ltd.

VISION رؤيـــة 2030
المملكة العربية السعودية
KINGDOM OF SAUDI ARABIA

ENGINEERING EXCELLENCE STARTS WITH THE RIGHT SUPPORT

www.eramltd.com

ABOUT OUR COMPANY

Eram Company Ltd is a dedicated provider of comprehensive scaffolding and formwork solutions, built on the pillars of safety, durability, and engineering precision. We cater to the evolving needs of the construction industry by offering a full range of services including material sales, rentals, consulting, and inspections. Our aim is to deliver high-performance systems that enhance on-site safety, reduce operational downtime, and contribute to the structural success of every project we support.

OUR VISION

To become a leading name in scaffolding and formwork solutions by fostering innovation, promoting safety, and delivering unmatched reliability in every product and service we offer.

OUR VALUES

Safety, Integrity, Transparency, and Community Relations, we at Eram make a major effort to develop an ongoing dialogue and assistance with the local residents.

OUR MISSION

Our mission is to empower construction and infrastructure projects with advanced scaffolding systems, expert technical services, and a customer-centric approach that ensures quality, safety, and operational efficiency from start to finish.

STRUCTURED FOR SUCCESS POWERED BY INNOVATION

SCAFFOLDING MATERIAL SALES & RENTAL

At Eram Company Ltd, we specialize in offering a wide selection of premium scaffolding materials designed to meet the dynamic needs of the construction industry. Whether you're managing a short-term renovation or a long-term infrastructure project, our scaffolding systems are available for both sale and rental, giving clients the flexibility to choose the most cost-effective solution without compromising on safety or quality.

Scaffolding Materials

- Standard
- Ledger
- Trasom
- Wooden Planks
- Board Clamp
- Fix Coupler
- Swivel Coupler
- Single Coupler
- Base Jack
- Base Jack
- Ladder
- Gi Pipe
- Standar Joint Connector
- Joint Box/joint Pin
- Ladder Clamp
- Lock Pin
- Prop Jack
- Aluminium Beam
- Ms Pipe
- Bracing
- Sole Plate
- Sleeve Coupler
- Grider Coupler
- Wing Nut
- Waller Plate
- Water Stopper
- Ladder Clamp
- Tie Rod Bar

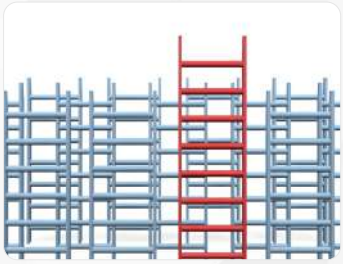

Our inventory includes versatile and durable scaffolding components that are easy to assemble and dismantle, ensuring project efficiency and worker safety. With options to suit a variety of structural configurations and site conditions, we support construction teams in achieving optimal access and performance. Every product is tested for strength, stability, and compliance with international safety standards.

SCAFFOLDING TOOLS & ACCESSORIES SUPPLY

Eram Company Ltd is your reliable source for scaffolding tools and accessories that enhance the performance and safety of your construction setups. We supply a wide array of essential items, including couplers, base jacks, ladders, clamps, and more—each carefully selected to ensure compatibility and durability across diverse scaffolding systems.

WIDE RANGE OF EXPERIENCE

EXPERTS ACROSS ALL SECTORS

COMMITTED TO OUR VALUES

EXPERIENCED PROFESSIONALS

Elevating Safety
Securing Strength

Tools You Can Trust, Performance You Can Rely On.

Eram Company Ltd is your dependable partner in providing high-quality scaffolding tools and accessories tailored to meet the demands of modern construction. Our comprehensive product range includes couplers, base jacks, clamps, ladders, and other essential components that are integral to safe and efficient scaffolding systems. Each item we offer is sourced with precision, ensuring durability, reliability, and compatibility with various scaffolding setups.

We understand that performance and safety are non-negotiable on any job site. That's why Eram Company Ltd emphasizes quality assurance and customer satisfaction in every product we deliver. Whether you're setting up for a residential project or a large-scale industrial operation, our scaffolding accessories are designed to support your structures and streamline your workflow—keeping your team secure and your project on track.

With Eram, you get trusted tools and unmatched support.

CONSULTING, DESIGN & INSPECTION SERVICES

Our in-house team of scaffolding and formwork experts at Eram Company Ltd delivers specialized consulting services to guide clients in planning and executing their access strategies with precision. We work closely with project managers to develop custom design solutions that maximize efficiency while adhering to safety regulations and engineering best practices.

In addition to design, we also offer comprehensive inspection services to ensure every scaffolding structure meets regulatory and operational standards. From pre-installation evaluations to periodic on-site inspections, our services are designed to identify risks early, reduce liabilities, and ensure structural integrity throughout the project lifecycle.

Built Right, Inspected Tight Safety from the Ground Up.

PRODUCT RANGE

CUPLOCK SYSTEM

The Cuplock System is a robust, versatile, and high-performance modular scaffolding solution engineered for rapid assembly and dismantling, offering exceptional load-bearing strength and superior structural safety for even the most demanding construction environments.

KWIKSTAGE & RINGLOCK SYSTEMS

Engineered for maximum adaptability and durability, Kwikstage and Ringlock scaffolding systems provide swift assembly and disassembly, making them the ideal choice for complex, large-scale construction projects that demand both efficiency and strength.

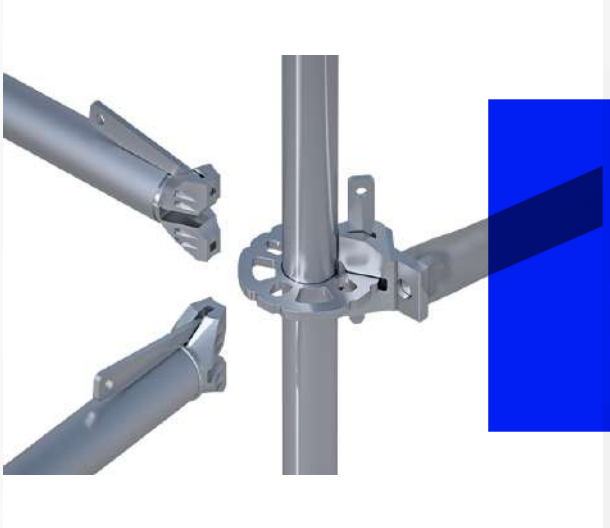

SCAFFOLDING TUBES, COUPLERS & JOINT ACCESS SYSTEMS

We supply high-strength, durable scaffolding tubes and couplers that form the backbone of safe and stable access systems, ensuring secure joints, optimal load distribution, and long-lasting structural reliability.

PRODUCT RANGE

WALKING BOARDS & PLANKS (WOODEN & STEEL)

Our selection of wooden and steel walking boards and planks is built for safety and strength, featuring slip-resistant surfaces and heavy-duty construction to provide reliable support for workers in demanding site conditions.

TABLE FORMWORK SYSTEMS

Our table formwork systems are expertly engineered for large-area slab construction, streamlining operations by minimizing repetitive assembly and disassembly, while delivering superior speed, structural strength, and high reuse efficiency.

ALUMINIUM SYSTEM SCAFFOLDS & LADDERS

Lightweight yet exceptionally strong, our aluminium scaffolding systems and ladders provide easy mobility, outstanding corrosion resistance, and reliable performance—perfect for safe and efficient use in both indoor and outdoor environments.

PRODUCT RANGE

PANEL SYSTEMS FOR WALL & COLUMN FORMWORK

Our precision-engineered panel systems streamline the construction of vertical walls and columns, delivering smooth surface finishes, uniform alignment, and enhanced efficiency for structural consistency across every project.

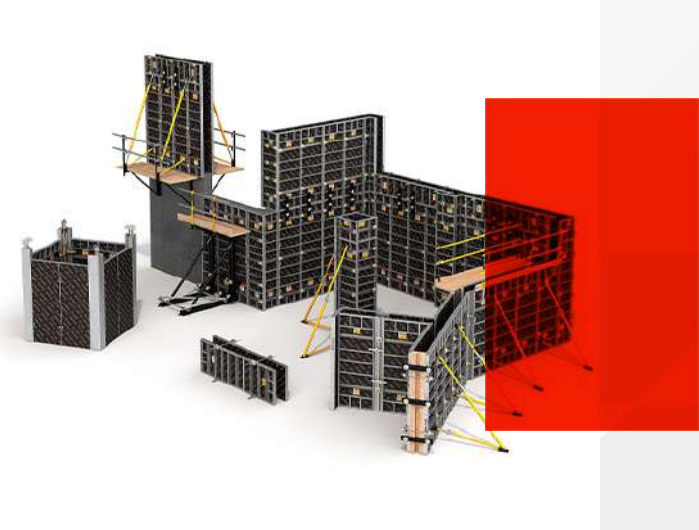

TOWER SCAFFOLDS (FIXED & MOBILE)

Our tower scaffolds, offered in both fixed and mobile designs, deliver secure and elevated work platforms that are easily adjustable, perfectly suited to meet the shifting demands of dynamic construction and maintenance tasks.

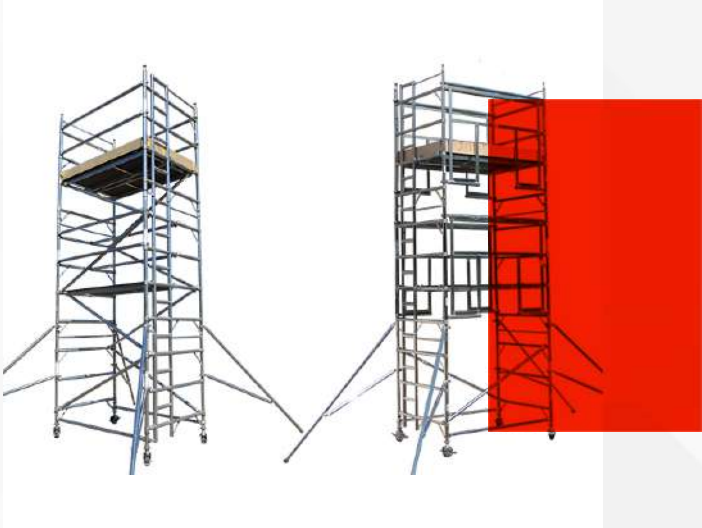

CANTILEVER FRAME & KOREAN FRAME SYSTEMS

Engineered for complex and hard-to-reach construction scenarios, our cantilever and Korean frame systems deliver robust, dependable support where conventional scaffolding solutions fall short, ensuring safety and stability in every application.

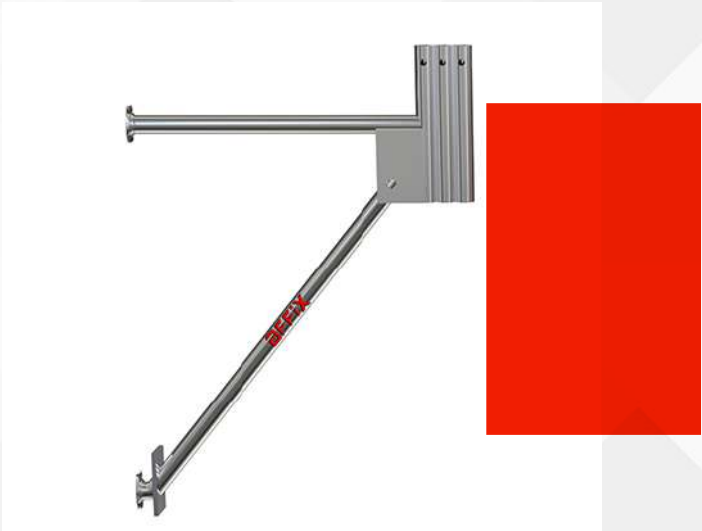

FORMING THE FUTURE WITH STRUCTURAL CONFIDENCE

VISION رؤيـــة 2030
المملكة العربية السعودية
KINGDOM OF SAUDI ARABIA

ERAM
Company Ltd.

Contact Us For **More Information**

Al Jubail, Saudi Arabia

+966 55 763 9443

info@eramltd.com

www.eramltd.com