Project #3. Semantic Analysis Symbol Table & Type Checker

Yongjun Park
Hanyang University

Project Goal

- **C-Minus Semantic Analyzer Implementation**
  - **Find All Semantic Errors** using Symbol Table & Type Checker

Symbol Table & Type Checker

- **Implement symbol table and type checker**
- **Traverse syntax tree created by parser**
- **Files to modify**
  - globals.h
  - main.c
  - util.h, util.c
  - scan.h scan.c
  - parse.h, parse.c
  - symtab.h, symtab.c
  - analyze.h, analyze.c

main.c

- **Modify NO_ANALYZE, TraceParse, and TraceAnalyze to suit your assignment**

```c
/* File: main.c                                          */
/* Main program for TINY compiler                        */
/* Compiler Construction: Principles and Practice        */
/* Kenneth C. Louden                                     */
/*******************************************************/

#include "globals.h"

/* set NO_PARSE to TRUE to get a scanner-only compiler */
#define NO_PARSE FLASE
/* set NO_ANALYZE to TRUE to get a parser-only compiler */
#define NO_ANALYZE FALSE

/* set NO_CODE to TRUE to get a compiler that does not
 * generate code
 */
#define NO_CODE FALSE

#include "util.h"
#if NO_PARSE
#include "scan.h"
#else
#include "parse.h"
#if !NO_ANALYZE
#include "analyze.h"
#if !NO_CODE
#include "cgen.h"
#endif
#endif
#endif

/* allocate global variables */
int lineno = 0;
FILE * source;
FILE * listing;
FILE * code;

/* allocate and set tracing flags */
int EchoSource = FALSE;
int TraceScan = FALSE;
int TraceParse = FALSE;
int TraceAnalyze = FALSE
int TraceCode = FALSE:
```

```c
/* set NO_PARSE to TRUE to
#define NO_PARSE FLASE
/* set NO_ANALYZE to TRUE t
#define NO_ANALYZE FALSE

/* set NO_CODE to TRUE to g
 * generate code
 */
#define NO_CODE FALSE
```

```c
/* allocate and set tracing
int EchoSource = FALSE;
int TraceScan = FALSE;
int TraceParse = FALSE;
int TraceAnalyze = FALSE;
int TraceCode = FALSE;
```


Hanyang University
Division of Computer Science & Engineering

symtab.h, symtab.c

- **Add scope and type to symbol table**
- **Implement hash table**

```
-void st_insert( char * name, int lineno, int loc );
+void st_insert( char * scope, char * name, ExpType type, int lineno, int loc );

 /* Function st_lookup returns the memory
  * location of a variable or -1 if not found
  */
-int st_lookup ( char * name );
+BucketList st_lookup ( char * scope, char * name );
+BucketList st_lookup_excluding_parent ( char * scope, char * name );
```

```
typedef struct BucketListRec
   { char * name;
     ExpType type;
     LineList lines;
     int memloc ; /* memory location for variable
     struct BucketListRec * next;
   } * BucketList;

/* The record for each scope,
 * including name, its bucket,
 * and parent scpoe.
 */
typedef struct ScopeListRec
   { char * name;
     BucketList bucket[SIZE];
     struct ScopeListRec * parent;
```

analyze.c

- **Modify symbol table generation**
  - buildSymtab(), insertNode(), traverse(), ... , scope and type concept
- **Modify the checkNode() function to check the semantics of C-Minus**
- **Insert built-in function**
  - Input(), output()

Symbol Table in Tiny

```
 1: { Sample program
 2:    in TINY language -
 3:    computes factorial
 4: }
 5: read x; { input an integer }
 6: if 0 < x then { don't compute if x <= 0 }
 7:    fact := 1;
 8:    repeat
 9:       fact := fact * x;
10:       x := x - 1
11:    until x = 0;
12:    write fact  { output factorial of x }
13: end
```

<Location>
Counter for variable memory locations.
Never overlapped in a scope.

Variable Name	Location	Line Numbers					
x	0	5	6	9	10	10	11
fact	1	7	9	9	12		

Symbol Table in C-Minus

```
 1:  /* A program to perform Euclid's
 2:    Algorithm to computer gcd */
 3:
 4:  int gcd (int u, int v)
 5:  {
 6:      if (v == 0) return u;
 7:      else return gcd(v,u-u/v*v);
 8:     /* u-u/v*v == u mod v */
 9:  }
10:
11: void main(void)
12: {
13:     int x; int y;
14:     x = input(); y = input();
15:     output(gcd(x,y));
16: }
```

Name	Type	Location	Scope	Line Numbers
output	Void	0	global	0 15
Input	Integer	1	global	0 14 14
gcd	Integer	2	global	4 7 15
main	Void	3	global	11
u	Integer	0	gcd	4 6 7 7
v	Integer	1	gcd	4 6 7 7 7
x	Integer	0	main	13 14 15
y	Integer	1	main	13 14 15

Symbol Table in C-Minus

- **Build with TraceAnalyze = TRUE; in main.c**

```
C-MINUS COMPILATION: ../../submission/2019-02/scanner/grading/testcase/gcd.cm

Building Symbol Table...


< Symbol Table >
Variable Name Variable Type  Scope Name  Location   Line Numbers
------------- -------------  ----------  --------   ------------
x              Integer       main        0           13   14   15
y              Integer       main        1           13   14   15
main           Function      global      3           16
input          Function      global      0            0   14   14
output         Function      global      1            0   15
gcd            Function      global      2            9    7   15
u              Integer       gcd         0            4    6    7    7
v              Integer       gcd         1            4    6    7    7    7
```

Symbol Table in C-Minus

- **Build with TraceAnalyze = TRUE; in main.c**

```
< Function Table >
Function Name  Scope Name  Return Type  Paramter Name  Paramter Type
-------------  ----------  -----------  -------------  -------------
main           global      Void                        Void
input          global      Integer                     Void
output         global      Void
                                                       Integer
gcd            global      Integer
                                        u              Integer
                                        v              Integer


< Function and Global Variables >
   ID Name      ID Type    Data Type
-------------  ---------  -----------
main           Function   Void
input          Function   Integer
output         Function   Void
gcd            Function   Integer
```

Symbol Table in C-Minus

- **Build with TraceAnalyze = TRUE; in main.c**

```
< Function Parameters and Local Variables >
  Scope Name     Nested Level      ID Name       Data Type
--------------  ------------  -------------  -----------
main            1             x              Integer
main            1             y              Integer

gcd             1             u              Integer
gcd             1             v              Integer
```

Built-in function

- **int input()**
  - One integer value is input from the user.
- **void output()**
  - Prints the value of arg.

- **These two functions are considered to be global functions defined by default.**

Symbol Table in C-Minus (Hint)

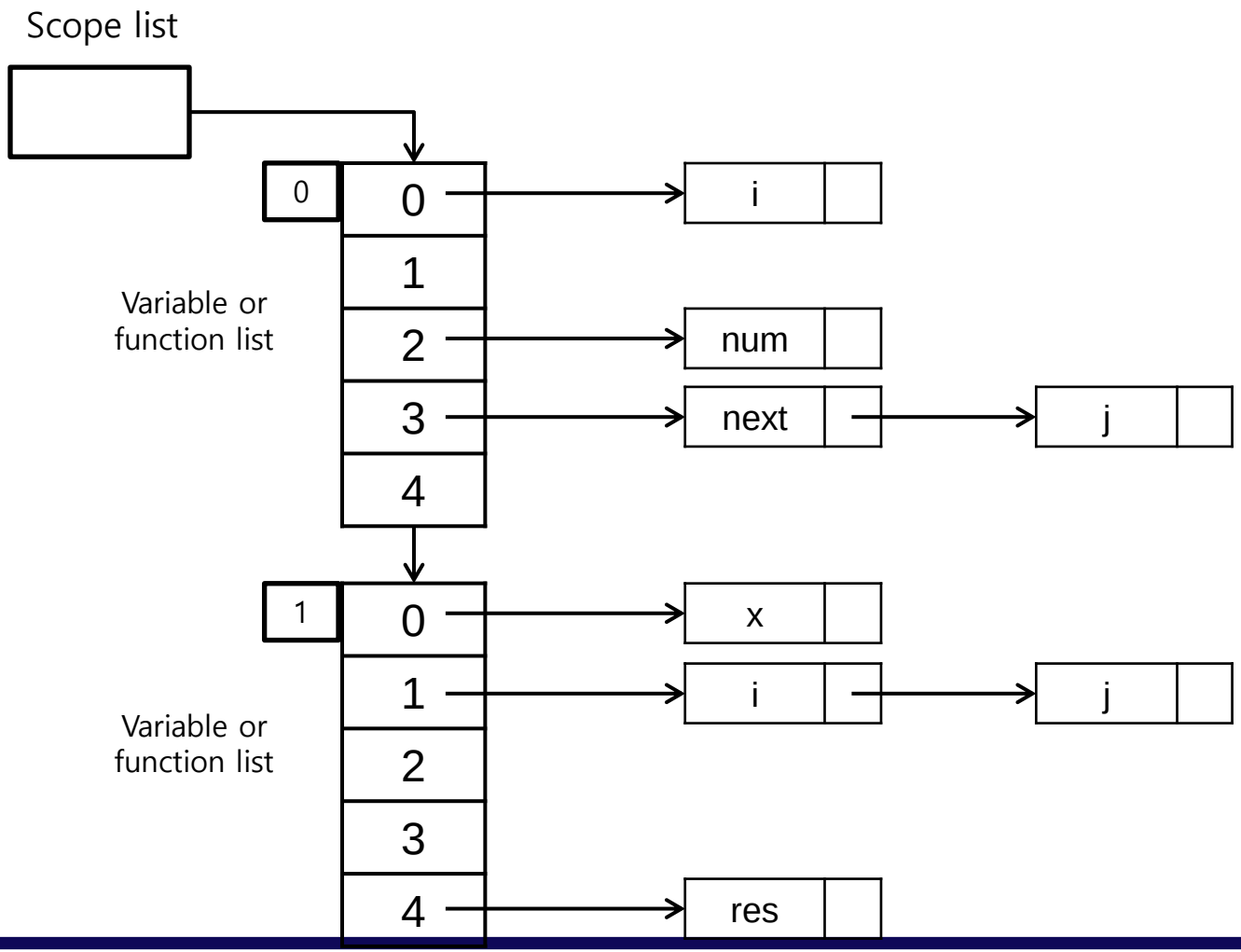

Implementation Notes

- Variables follow scope of each compound statement.
- Throws an error when an undeclared variable is used.
- Built-in functions should be always accessible.
- As long as the scope concept is implemented properly, you can use any implementation or output form. It is not our goal

Type Checker

- **Type checking for functions and variables.**
  - The type “void” is only available for functions.
  - Check return type.
  - Verify the type match of two operands when assigning.
  - Check the argument number when calling function.
  - Check if conditional of “If” or “While” has a value.
  - Check other things by referring to C-Minus syntax.
  - Note: C-minus Type → void, int, int[]

Goal: Semantic Error Detection

- **Undefined/Redefined Variables/Function**
  - Scope Rule: Same as C language
  - Function Declaration and Implementation can be separated.
  - Function Overloading is not allowed
- **Array Indexing Check**
- **Function Call Check**
- **Built-in Function Check**
- **Type Check**
  - “int[] + int[]”, “int[] + int” and “void + void” not allowed
  - Return Type, Assignment Type, Void Variable, If/While Condition, …
  - Function Arguments (Number of Parameter, Types)

- **Output Requirements: Line Number, Error Type**

Examples

```
1  int main(void)
2  {
3          int x;
4          int y[3];
5
6          x + y;
7
8          return 0;
9  }
```

```
C-MINUS COMPILATION: ./test/simple/type_error.cm
Error: Type error at line 6: invalid expression
```

Line number Error Type

```
1  int main(void)
2  {
3          void x;
4          return 0;
5  }
```

```
C-MINUS COMPILATION: ./test/simple/void_var.cm
Error: Variable Type cannot be Void at line 3 (name : x)
```

Examples

```
1  int x(int y)
2  {
3          return y + 1;
4  }
5
6  int main(void)
7  {
8          int a;
9          int b;
10         int c;
11
12         return x( a, b, c );
13 }
```

```
C-MINUS COMPILATION: ./test/simple/func.cm
Error: Type error at line 12: invalid function call
```

```
1  int main(void)
2  {
3          return x;
4  }
```

```
C-MINUS COMPILATION: ./test/simple/undeclare.cm
Error: Undeclared Variable "x" at line 3
Error: Type error at line 3: invalid return type
```

Report

- **Guideline**
  - Build environment(OS, compiler, …).
  - Semantic analysis implementation process and source code description of principal parts.

- **File format**
  - MS Word, HWP, PDF, …
  - GitLab Wiki Not Allowed
    (If you want, write report in markdown and **take screenshot** and submit in other formats(PDF, JPEG, …))

Submission

- **Submission directory in repository: 3_Semantic**
  (Please submit all your codes and reports into the submission directory)

- **Questions**
  - compiler.teachingassistant@gmail.com

- **Submission deadline**
  - Push until Sunday, **December 20, 2020, 23:59:59.**
  - Master branch will be cloned at 0:00 on Monday, December 21, 2020

Contact (Prof. Yongjun Park)

- **Submission**
  - Where: Using GitLab
    - https://hconnect.hanyang.ac.kr
    - Git Project:
      https://hconnect.hanyang.ac.kr/2020_ELE4029_11784/2020_ELE4029_Student#.git
    - Example URL: https://hconnect.hanyang.ac.kr/2020_ELE4029_11784/2020_ELE4029_2018000000.git
    - The Submission Directory is in Repo: 1_Scanner, 2_Parser, **3_Semantic**, …
  - Teaching Assistant
    - **compiler.teachingassistant@gmail.com**
    - If you don't have the GITLAB account, please let him know the account information after creation.
  - **What to submit**
    - **All the source codes and the report**

Q & A