Yet Another Provisioning Tool

Automate Provisioning Devices

19/06/2018

What YAPT is and isn't

What it's

- An open source project
- Tool to provision
  - (v)SRX / EX / (v)QFX / vMX / NFX
- Plugin based
- Extendable
- Lightweight
- Good is Good enough

What it's NOT

- A Juniper "product"
- Officially supported by Juniper (No JTAC)
- A replacement for existing Rapid Deployment solutions

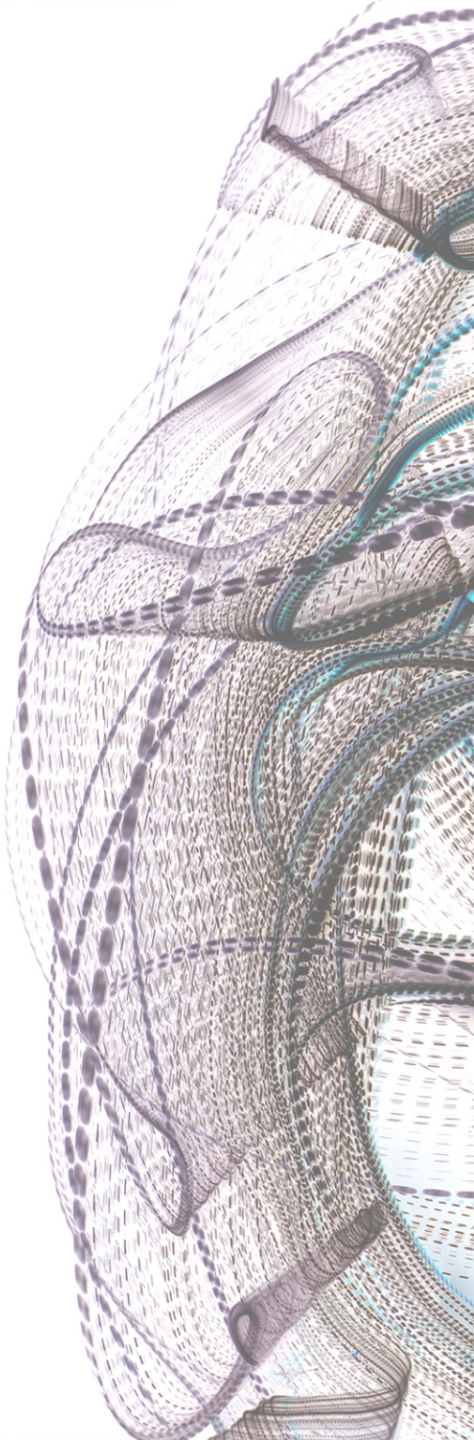

YAPT applications

PoC/Demo

Pre-configured with different plugins
Pre-configured with different tasks

PS

Juniper Professional Services

Testing/Dev

New functionalities
New devices
Multi-Vendor

JUNIPER NETWORKS

Architecture

Overview

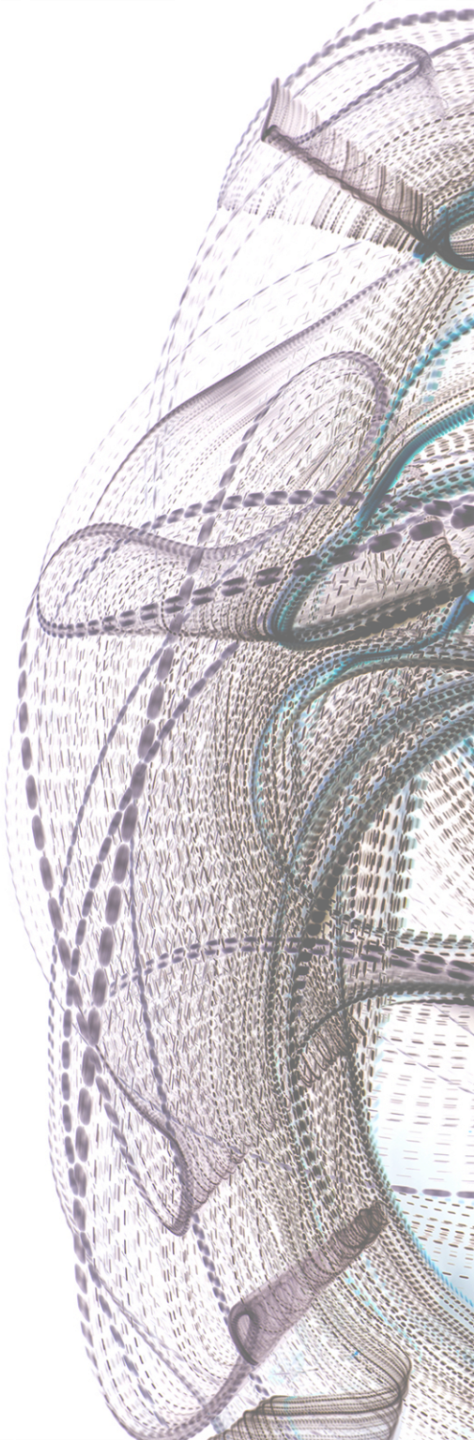

Modular Architecture

Broker Messages
Internal Messages
SSH / NetConf
Trigger Event

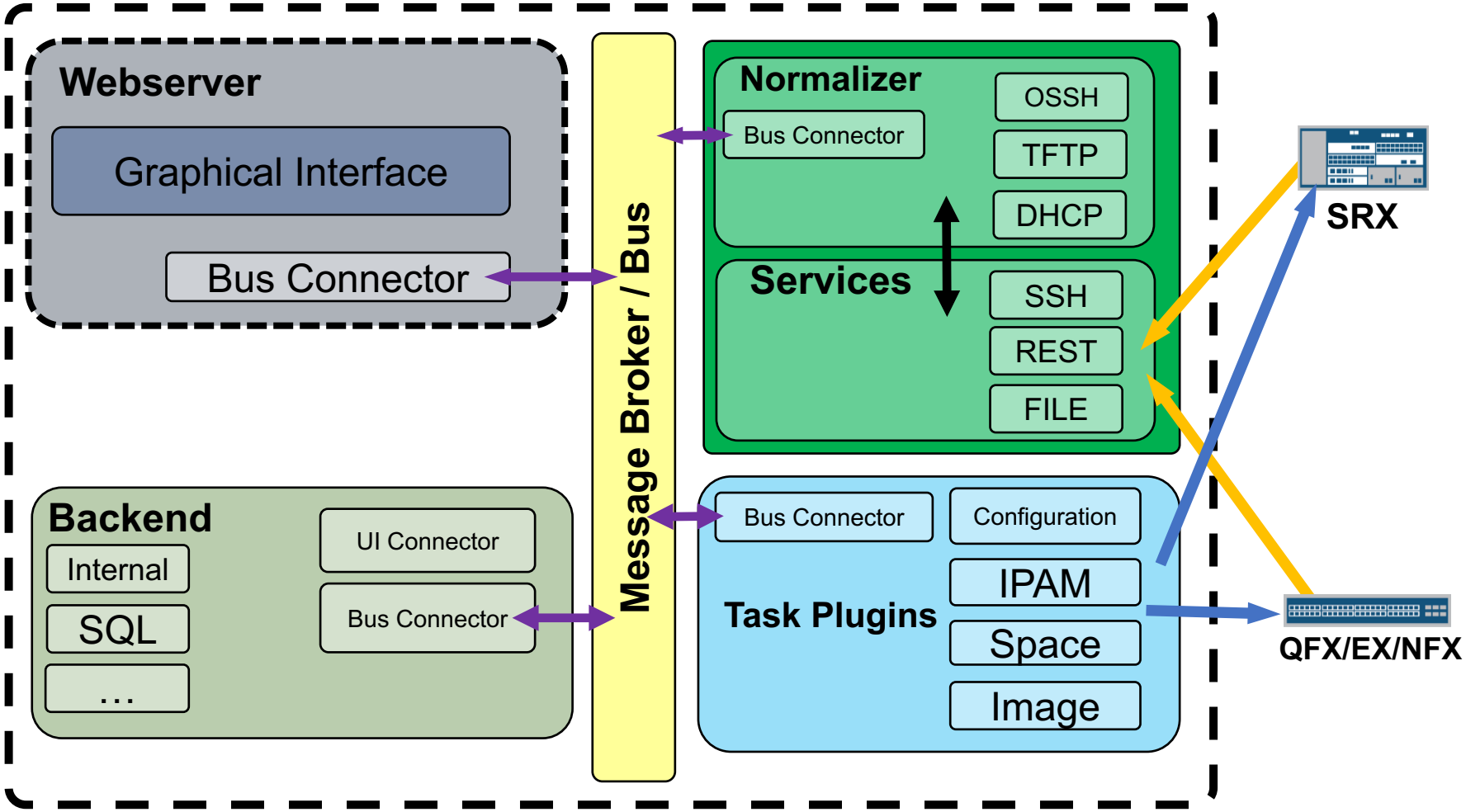

JUNIPER NETWORKS

Components

Message Broker / UI / Backend / Services

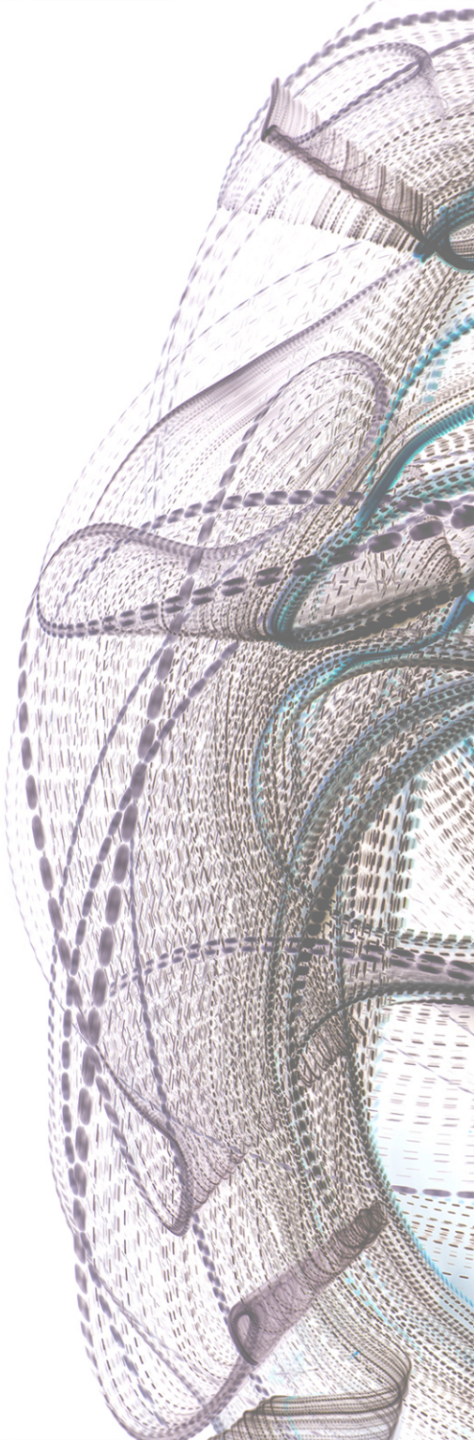

JUNIPER NETWORKS

Message Broker

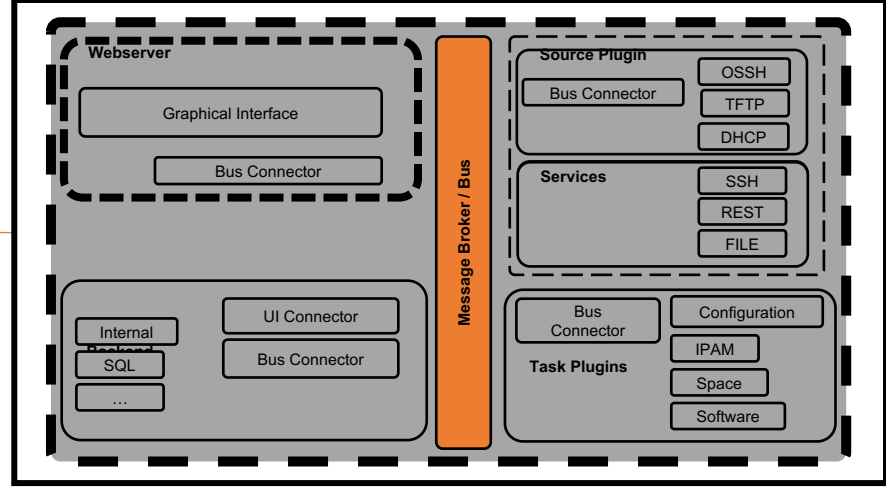

RabbitMQ

RabbitMQ is a message broker
Widely deployed
Ability to route messages in various ways

Event Driven
Tasks driven by work queues
Backend is RPC based

Could also be any other broker like ZeroMQ

JUNIPER NETWORKS

Web UI

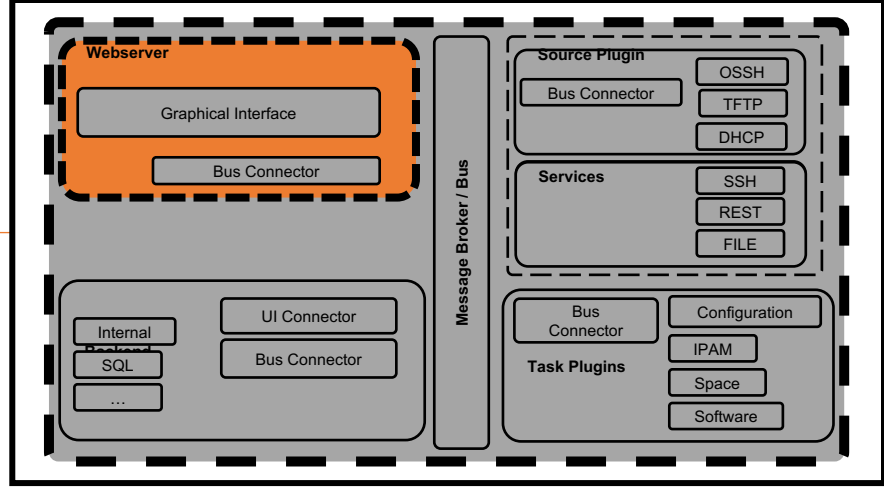

CherryPy is a Minimalist Python Web Framework
CherryPy Engine (Bus) to communicate with
CherryPy has a easy way to provide REST services

Bootstrap is a HTML, CSS, and JS framework

HTML5 WebSockets
Real time communication between Message Broker and Web UI

Web UI

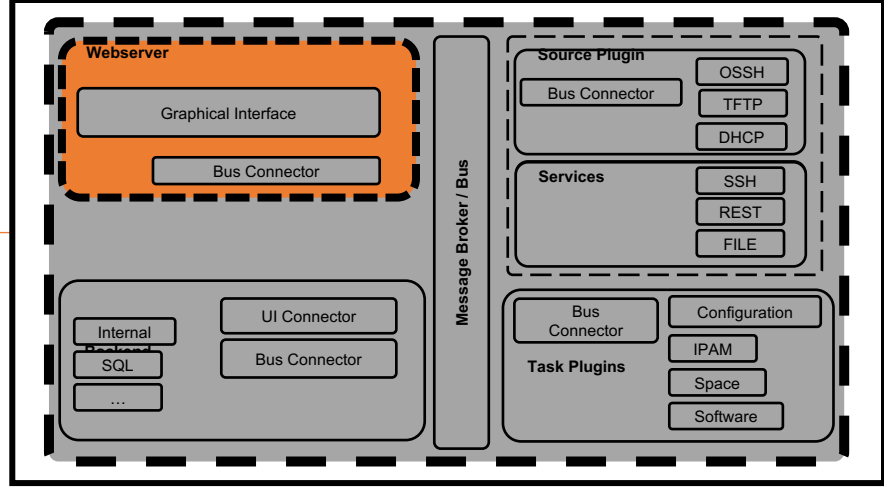

CherryPy
A Minimalist Python Web Framework

Bootstrap

HTML WebSockets

Yet Another Provisioning Tool | Jobs | Configuration | Settings | Log | About

Overview

	Name	Model	Serial	Version	IP	Last Seen	Progress
	vsrx_ztp01	FIREFLY-PERIMETER	396d80ac3713	12.1X47-D40.1	172.16.146.133	2018-05-14 13:11:06	100%

Storage: TBD | Connection: 0x10d4de110 | Service Plugin: tftp | Group: srx

Task	Status	Options
Init	Done	
Configuration	Done	
Software	Done	
Cleanup	Done	

Backend

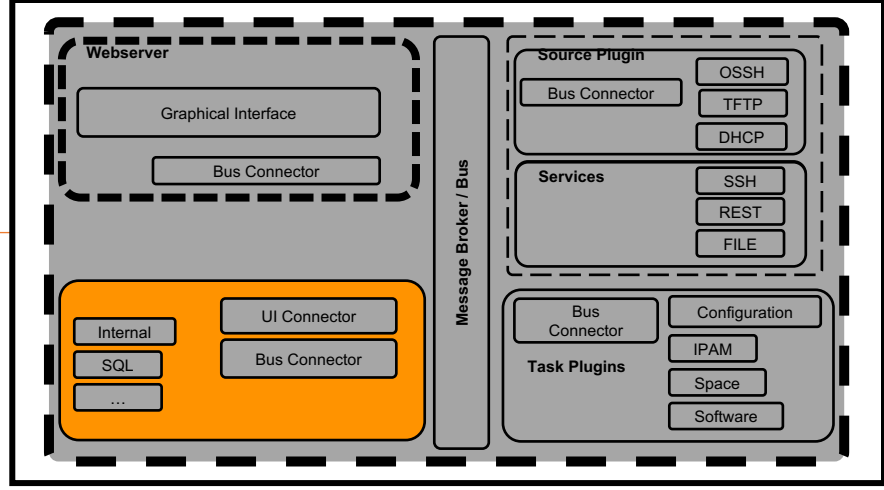

python

Internal
- Python Dict based
- No persistence
- Good for PoC

SQLITE
- Persistence
- Access historic data

Other backend types could be added due to plugin architecture
Other SQL based backend could be added (ORM)

JUNIPER NETWORKS

Services

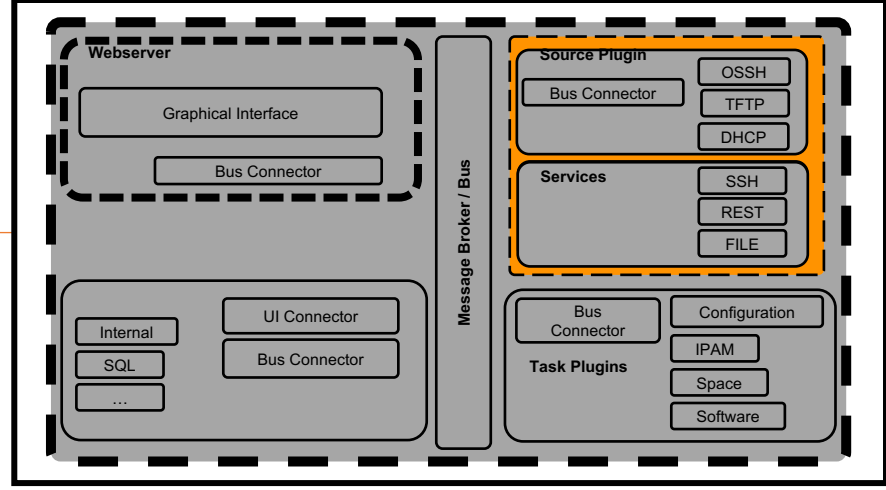

python

A Service provide a interface receiving data

Normalizer relay on services
Read information provided by services and normalize data

YAPT ships with services: WEBHOOK / FILE / OSSH / PHS
YAPT ships with normalizer: tftp / dhcp / webhook / ossh / phs

JUNIPER NETWORKS

Components

Task Plugins

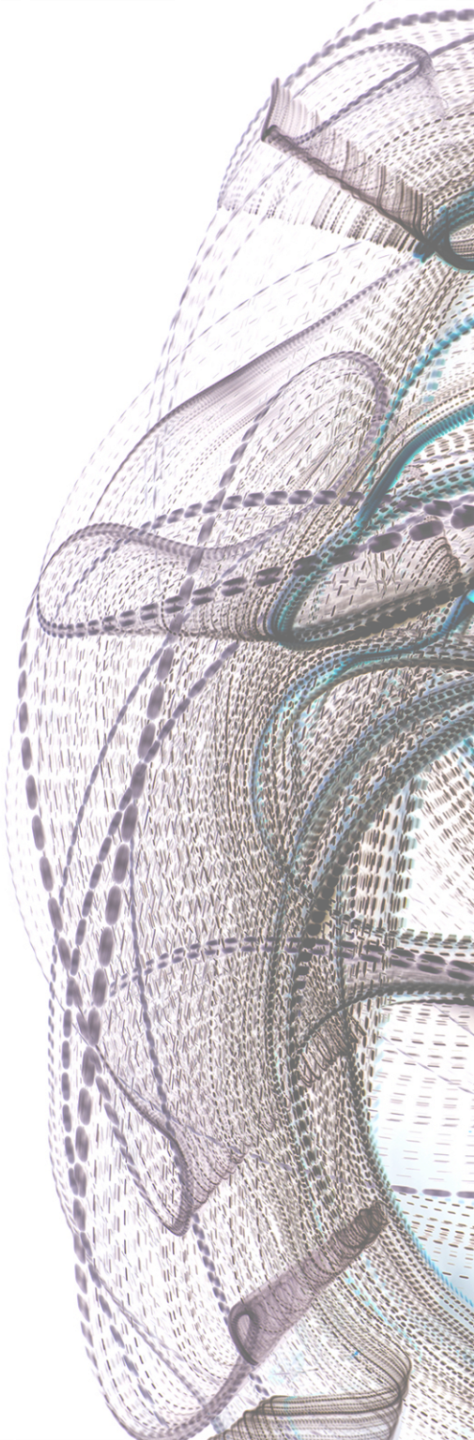

JUNIPER NETWORKS

Tasks

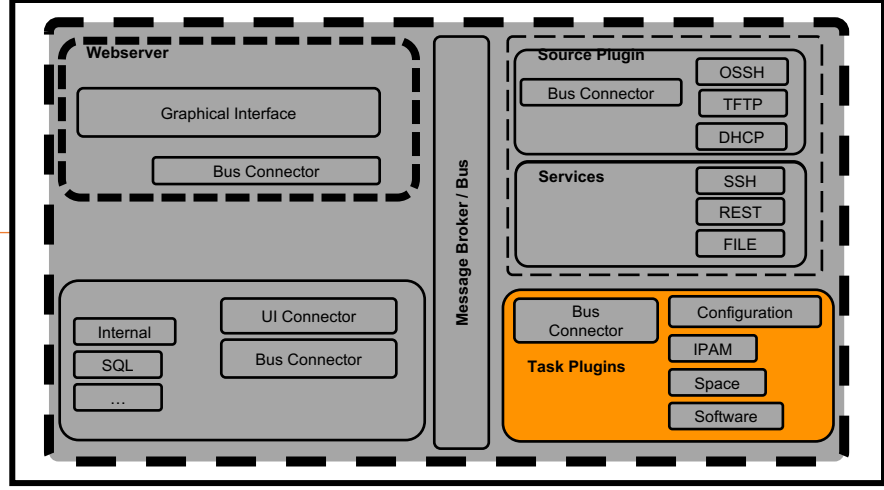

python

The workhorses
Multithreaded

Uses PyEZ or NAPALM communicating to device

Plugin Based
Types: Provisioning and Verification Tasks

JUNIPER NETWORKS

Tasks

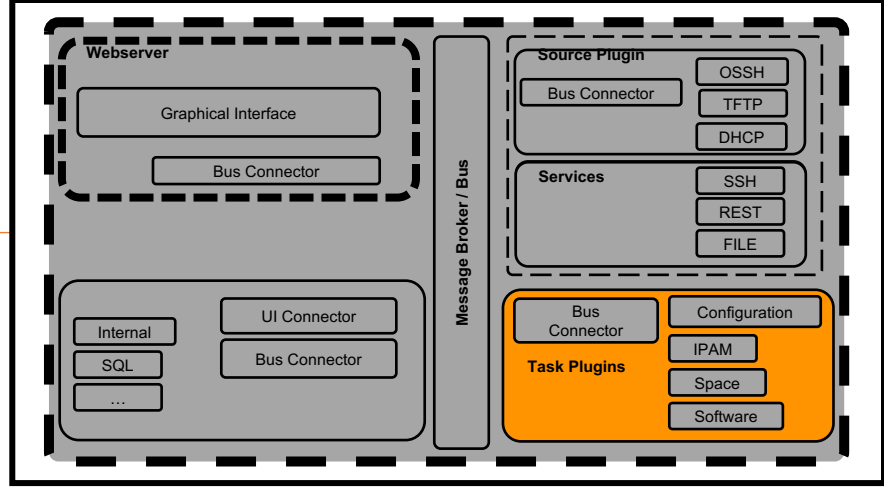

python

Provisioning tasks:

- Software
- IPAM
- Configuration
  - Internal
    - PyEZ
    - Napalm
  - External
    - Ansible
- VNFStage / VNFSpin
- Cert
- Filecopy
- Junos Space related
  - Discovery / Configlet
  - Policy
  - Rule
  - Assign
  - Publish

JUNIPER NETWORKS

Components

Logging

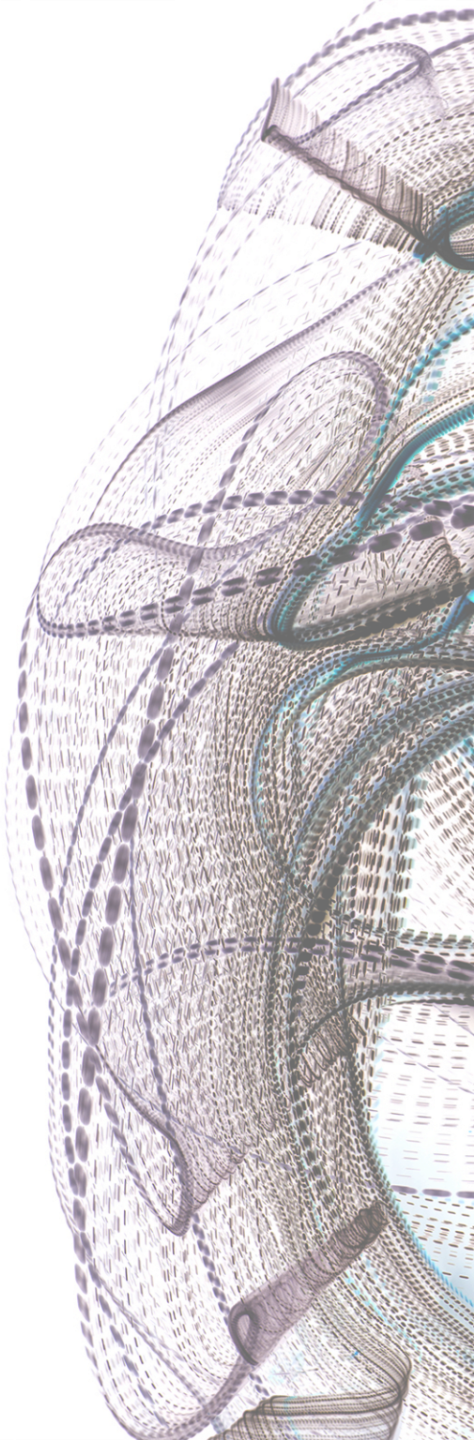

Logging

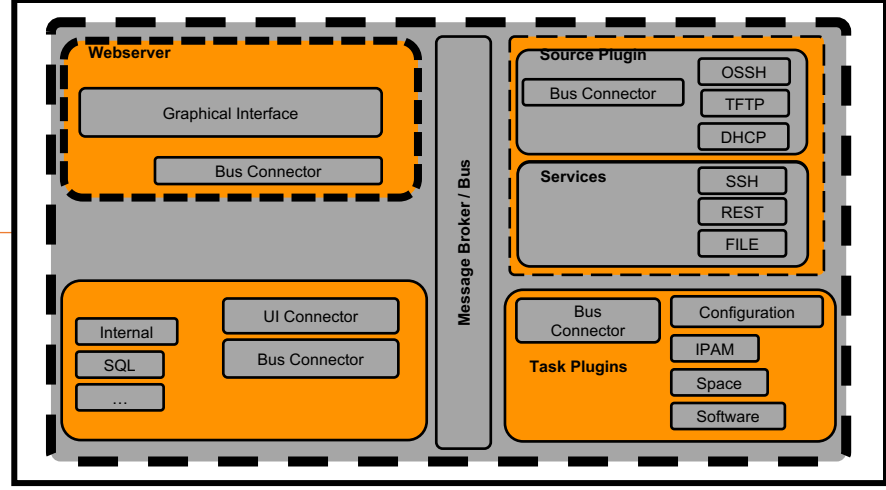

Applies to Tasks, Services, WebUI and Backend

Logs are written to “logs” directory
tail –f ./logs/info.log | grep [SERIALNUMBER]

```
2018-05-13 22:39:56 - [YAPT.INFO] --- [OSSHSERVICE        ][172.16.146.133    ][New connection from <('172.16.146.133', 54912)>]
2018-05-13 22:39:56 - [YAPT.INFO] --- [OSSHSERVICE        ][172.16.146.133    ][Received DMI DEVICE-CONN-INFO request]
2018-05-13 22:39:56 - [YAPT.INFO] --- [OSSHSERVICE        ][172.16.146.133    ][HMAC verification <Good>]
2018-05-13 22:39:56 - [YAPT.INFO] --- [OSSHSERVICE        ][172.16.146.133    ][<1> connection attempt from device <('172.16.146.133', 54912)>]
2018-05-13 22:40:11 - [YAPT.INFO] --- [OSSHSERVICE        ][172.16.146.133    ][New connection from <('172.16.146.133', 58042)>]
2018-05-13 22:40:11 - [YAPT.INFO] --- [OSSHSERVICE        ][172.16.146.133    ][Received DMI DEVICE-CONN-INFO request]
2018-05-13 22:40:11 - [YAPT.INFO] --- [OSSHSERVICE        ][172.16.146.133    ][HMAC verification <Good>]
2018-05-13 22:40:11 - [YAPT.INFO] --- [OSSHSERVICE        ][172.16.146.133    ][<2> connection attempt from device <('172.16.146.133', 58042)>]
2018-05-13 22:40:13 - [YAPT.INFO] --- [STORAGE            ][396d80ac3713      ][Checking config id mapping in asset database]
2018-05-13 22:40:13 - [YAPT.INFO] --- [STORAGE            ][396d80ac3713      ][Successfully retrieved config id mapping for 1WB6PTXYRG9Z<-->AEV3XEETHOHV]
```

JUNIPER NETWORKS

Logging

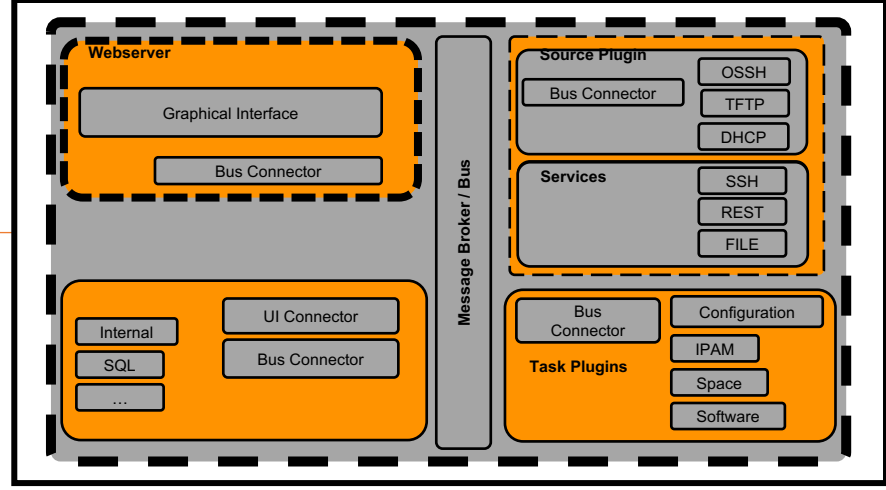

Real-time Log Viewer in UI

Yet Another Provisioning Tool | Jobs | Configuration | Settings | Log | About

```
                2018-06-19 12:59:07 - [YAPT.INFO] --- [LOGVIEWER            ][##################  ][Successfully started Logviewer service]
2018-06-19 12:59:07 - [YAPT.INFO] --- [LOGVIEWER            ][##################  ][Observing log file <logs/info.log>]
2018-06-19 12:59:07 - [YAPT.INFO] --- [BACKENDPLG           ][##################  ][Searching for backend plugin <sql>]
2018-06-19 12:59:07 - [YAPT.INFO] --- [SQLBACKEND           ][##################  ][SQL Backend service started...]
2018-06-19 12:59:08 - [YAPT.INFO] --- [TASKPROCESSOR        ][##################  ][Starting taskprocessor0]
2018-06-19 12:59:08 - [YAPT.INFO] --- [TASKPROCESSOR        ][##################  ][Starting taskprocessor1]
2018-06-19 12:59:08 - [YAPT.INFO] --- [JSPACEPLG            ][##################  ][Searching for Junos Space plugin <space151>]
2018-06-19 12:59:08 - [YAPT.INFO] --- [JSPACEPLG            ][##################  ][Plugin <15.1> successfully loaded]
2018-06-19 12:59:08 - [YAPT.INFO] --- [SERVICEPROCESSOR      ][##################  ][Starting serviceprocessor]
2018-06-19 12:59:08 - [YAPT.INFO] --- [FILESERVICE           ][##################  ][Starting file service...]
2018-06-19 12:59:08 - [YAPT.INFO] --- [FILESERVICE           ][##################  ][watched_dir = logs/testlogs]
2018-06-19 12:59:08 - [YAPT.INFO] --- [FILESERVICE           ][##################  ][patterns = logs/testlogs/tftpd.log]
2018-06-19 12:59:08 - [YAPT.INFO] --- [FILESERVICE           ][##################  ][Starting file service...]
2018-06-19 12:59:08 - [YAPT.INFO] --- [FILESERVICE           ][##################  ][watched_dir = logs/testlogs]
2018-06-19 12:59:08 - [YAPT.INFO] --- [FILESERVICE           ][##################  ][patterns = logs/testlogs/dhcpd.leases]
2018-06-19 12:59:08 - [YAPT.INFO] --- [OSSHSERVICE           ][##################  ][Starting OSSH service...]
2018-06-19 12:59:08 - [YAPT.INFO] --- [OSSHSERVICE           ][##################  ][Listening for new connections on <172.16.146.1:7804>]
```

Interaction

Overview

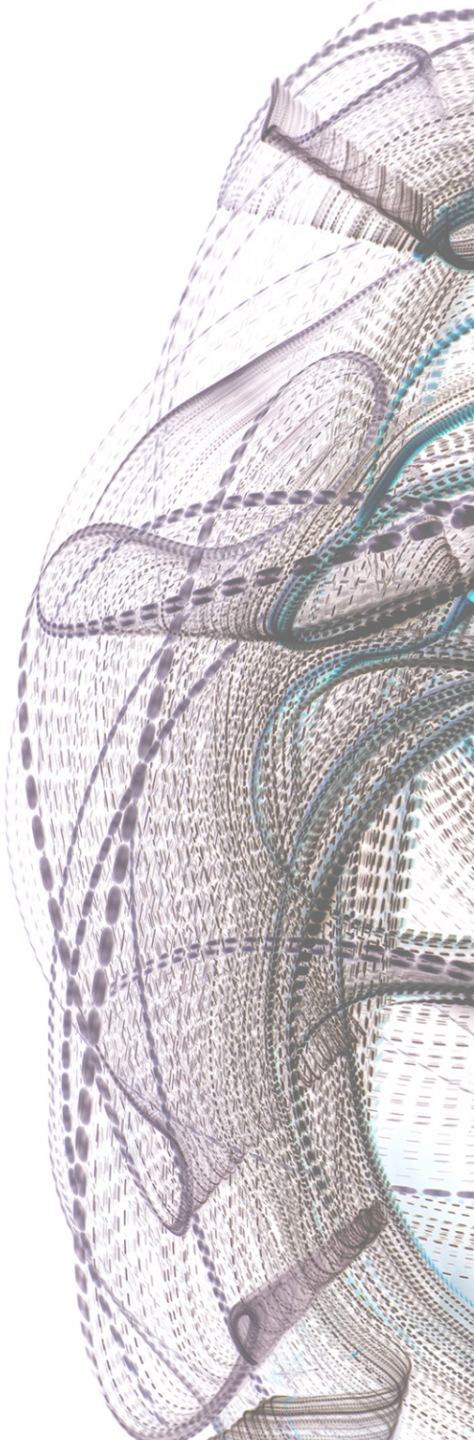

JUNIPER NETWORKS

Interfaces

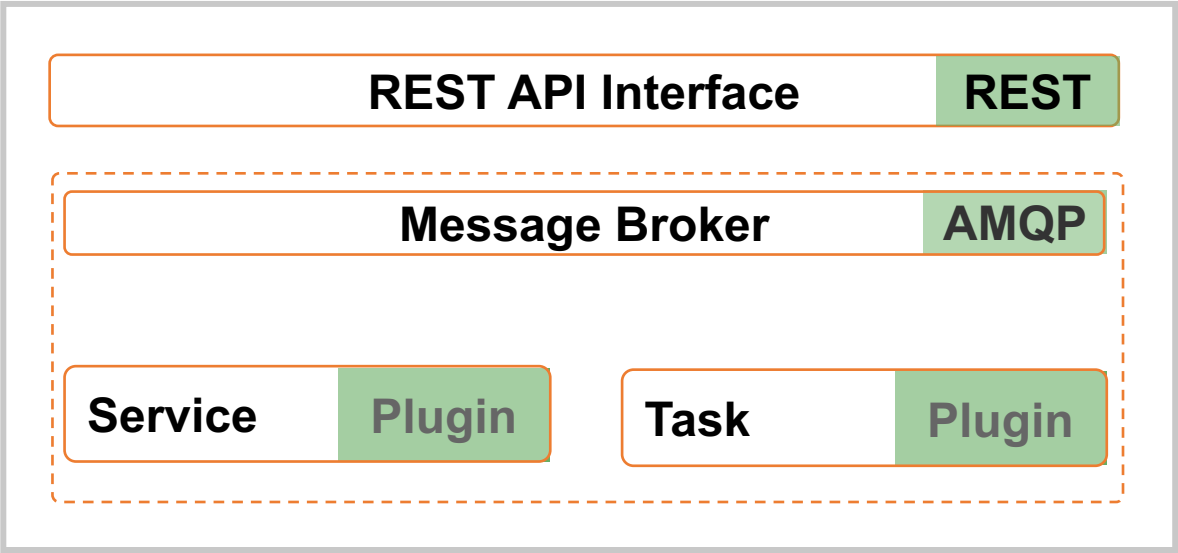

Broker Interface

Interact with YAPT using Message Broker
Send messages to bus to:

- Trigger an event
- Start a task(s)
- Obtain information

REST Interface

Interact with YAPT using REST API

- Start tasks
- Create / delete / modify objects

Service / Task Plugins

Extend YAPT by writing new plugins:

- Task
- Service
- Normalizer
- Backend

Deployment

Overview

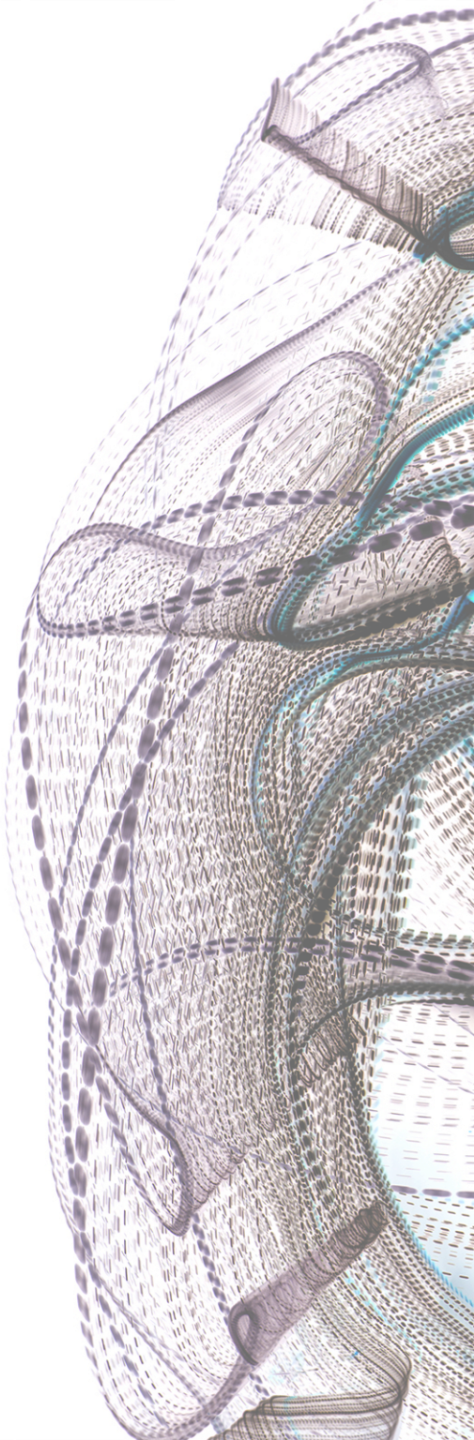

JUNIPER NETWORKS

Standalone

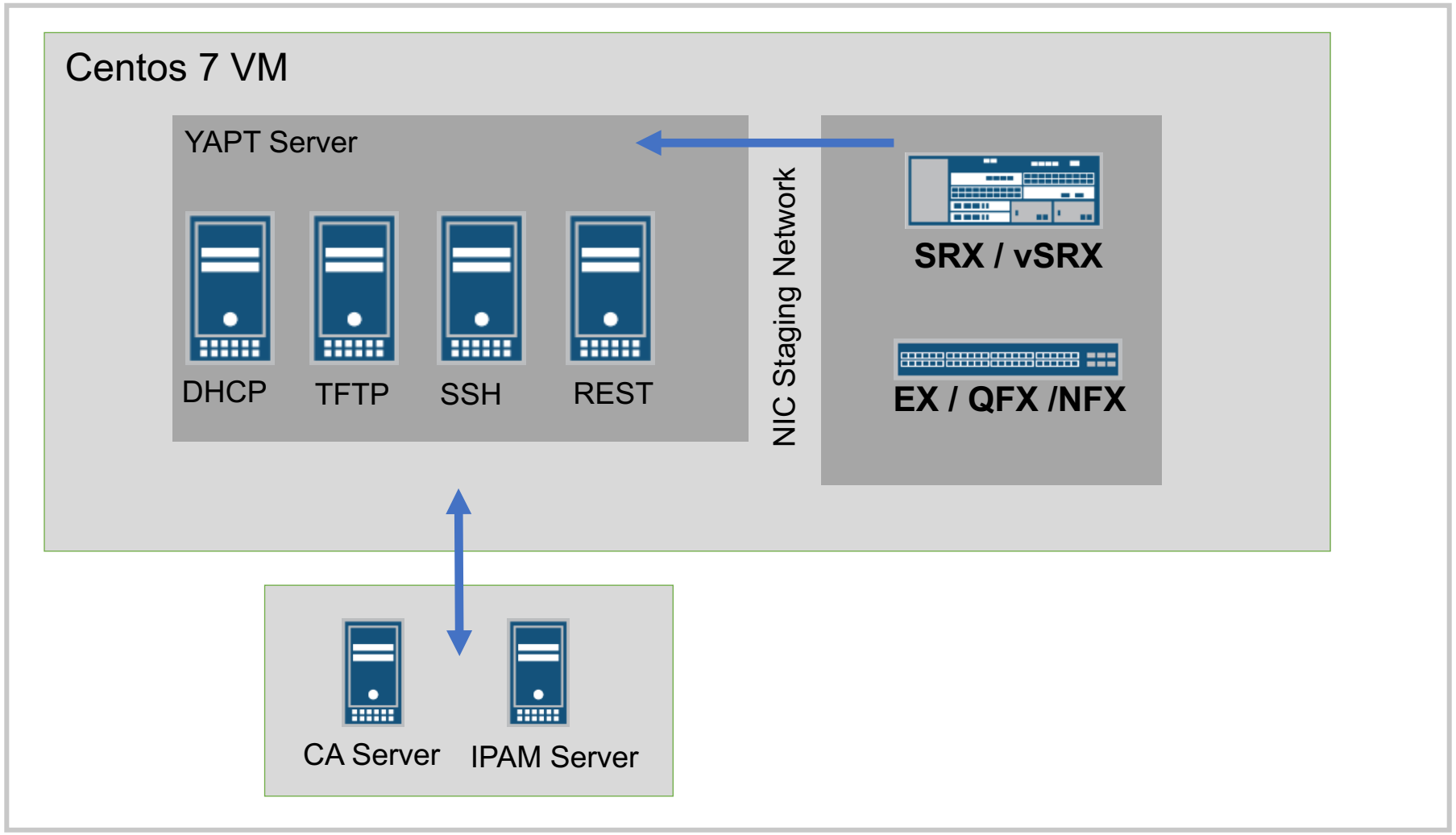
Centos 7 VM
YAPT Server
DHCP
TFTP
SSH
REST
NIC Staging Network
SRX / vSRX
EX / QFX /NFX
CA Server
IPAM Server

Container

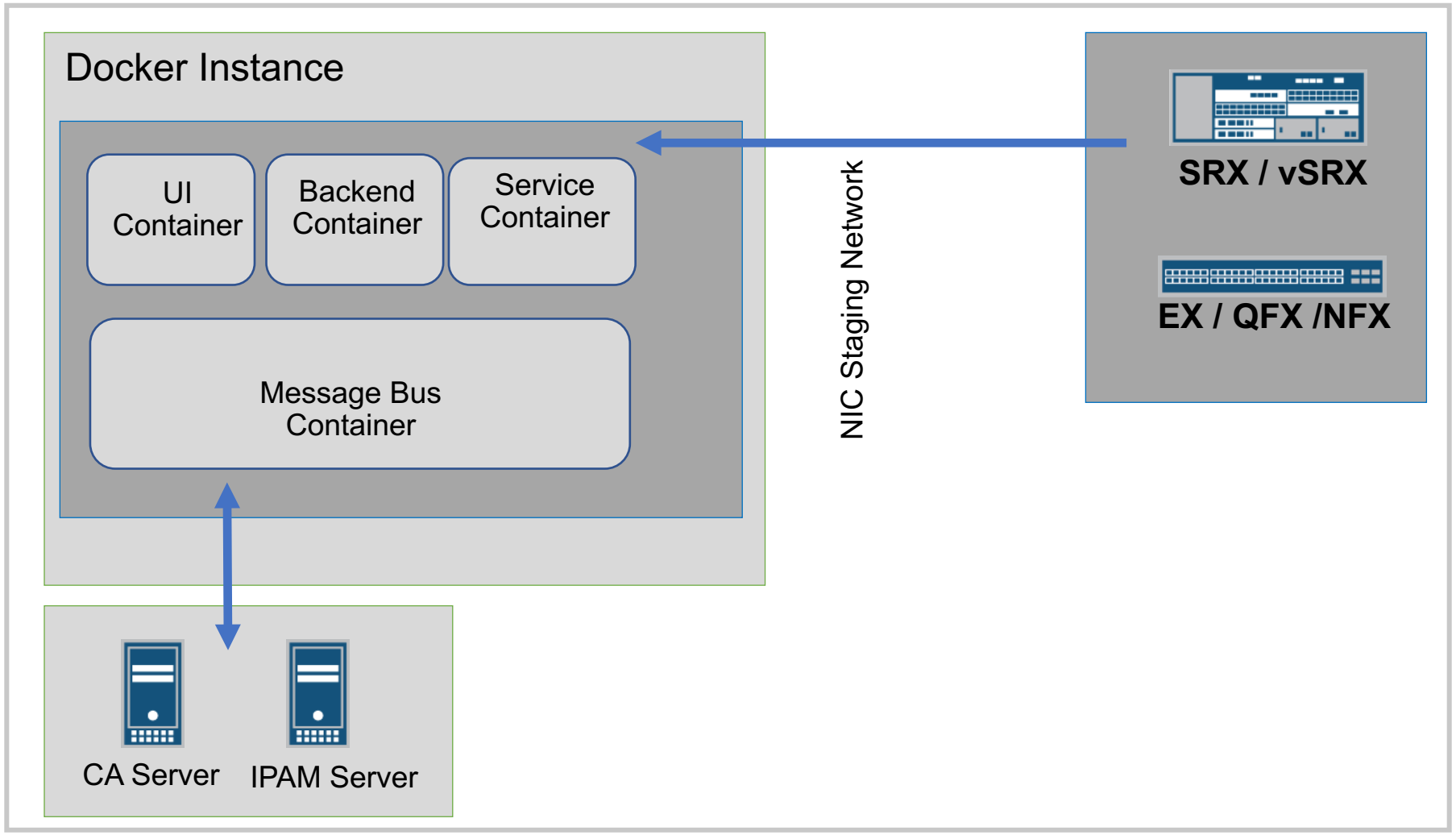
Docker Instance
UI Container
Backend Container
Service Container
Message Bus Container
NIC Staging Network
SRX / vSRX
EX / QFX /NFX
CA Server
IPAM Server

Vagrant

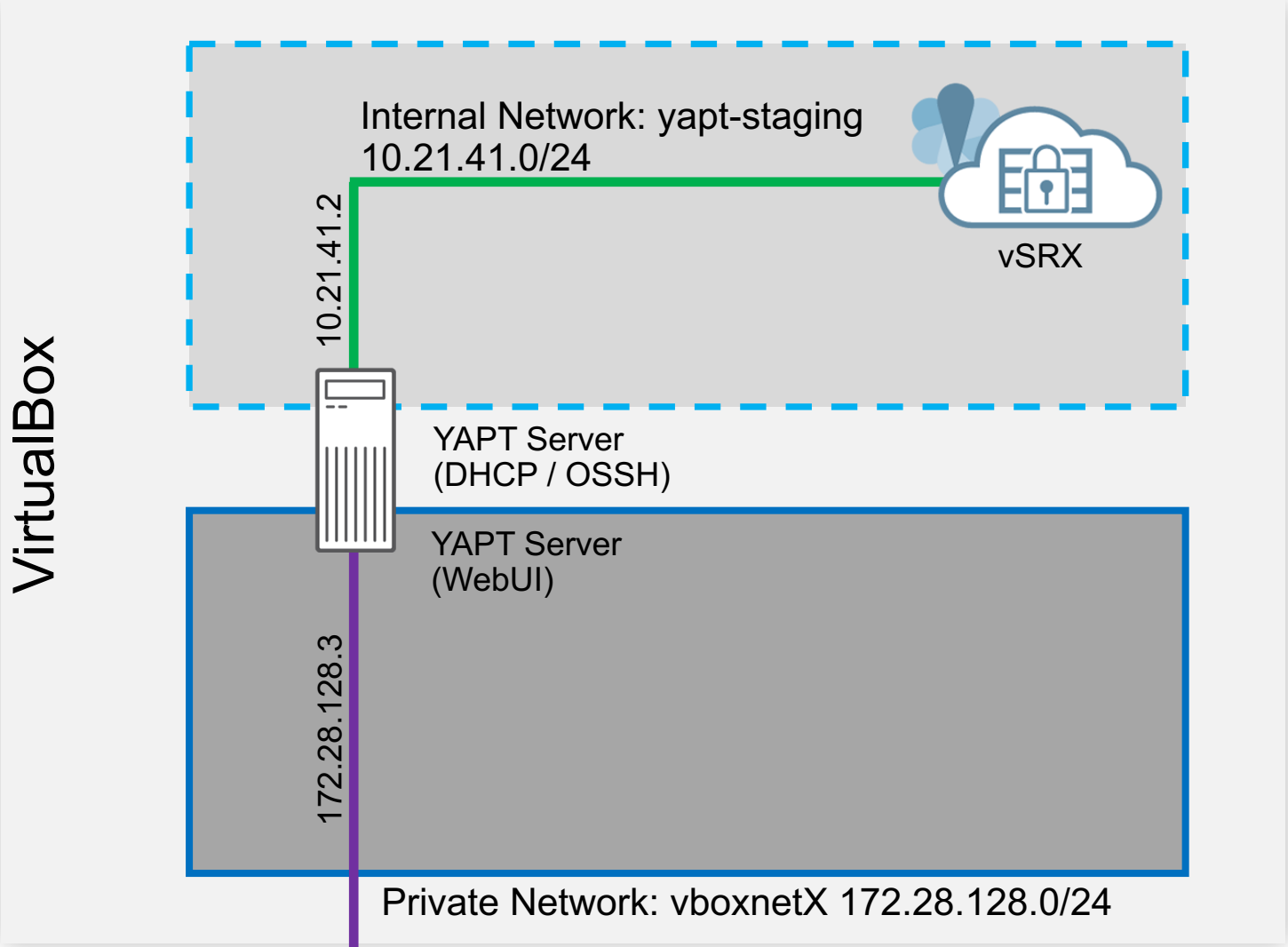
VirtualBox
Internal Network: yapt-staging
10.21.41.0/24
vSRX
10.21.41.2
YAPT Server
(DHCP / OSSH)
YAPT Server
(WebUI)
172.28.128.3
Private Network: vboxnetX 172.28.128.0/24

Platforms

Tested Hardware / Software

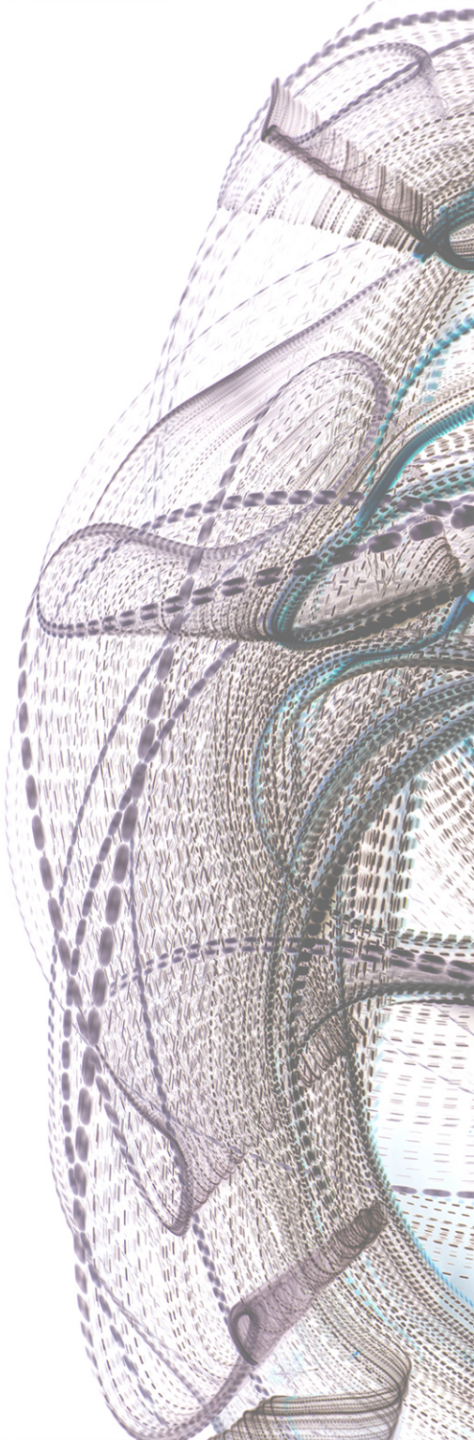

JUNIPER NETWORKS

Vagrant

SRX3xx: 15.1X49-D45 / 15.1X49-D90 / 15.1X49-D100
vSRX : 15.1X49-D45 / 15.1.X49-D80 / 15.1X49-D90 / 15.1X49-D100
FP : 12.1X47-D20
vMX : 17.1R2.1
EX4300: 17.1R1
vQFX :17.1

Junos Space SD: 15.1 /16.1

Contribute and Participate

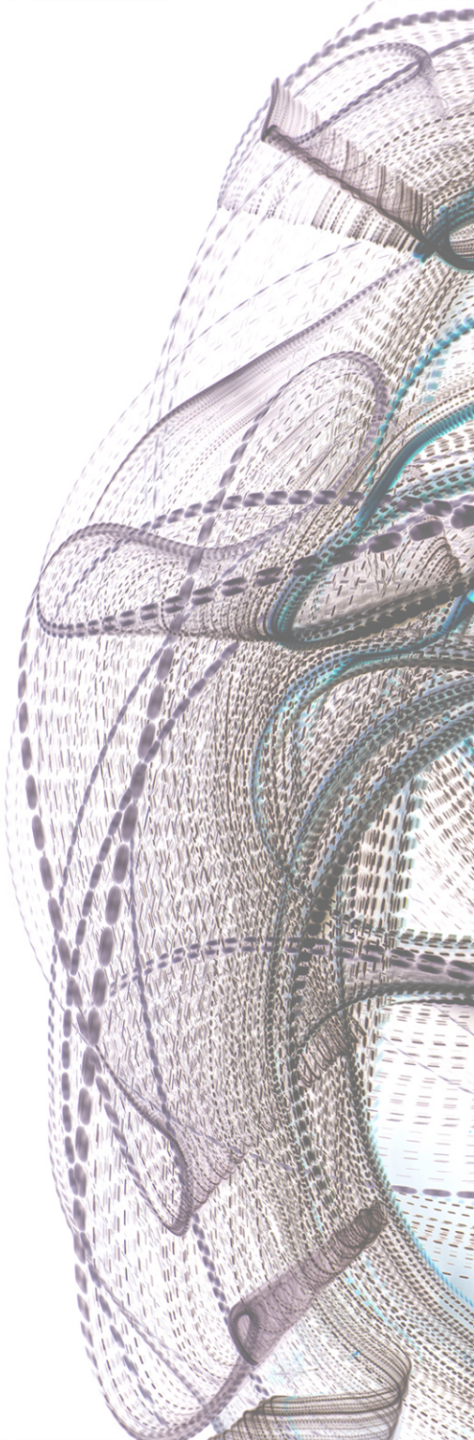

JUNIPER NETWORKS

Projects open to contribution

YAPT
https://github.com/Juniper/YAPT

YAPT Documentation
https://github.com/Juniper/YAPT/wiki

How can you contribute

- Improve documentation
- Report issue
- Improve Web UI
- Add new source plugins
- Add new services
- Suggest enhancement
- New ideas

Contribution is not just about code

YAPT – Automate Provisioning Devices

Thank you

JUNIPER NETWORKS