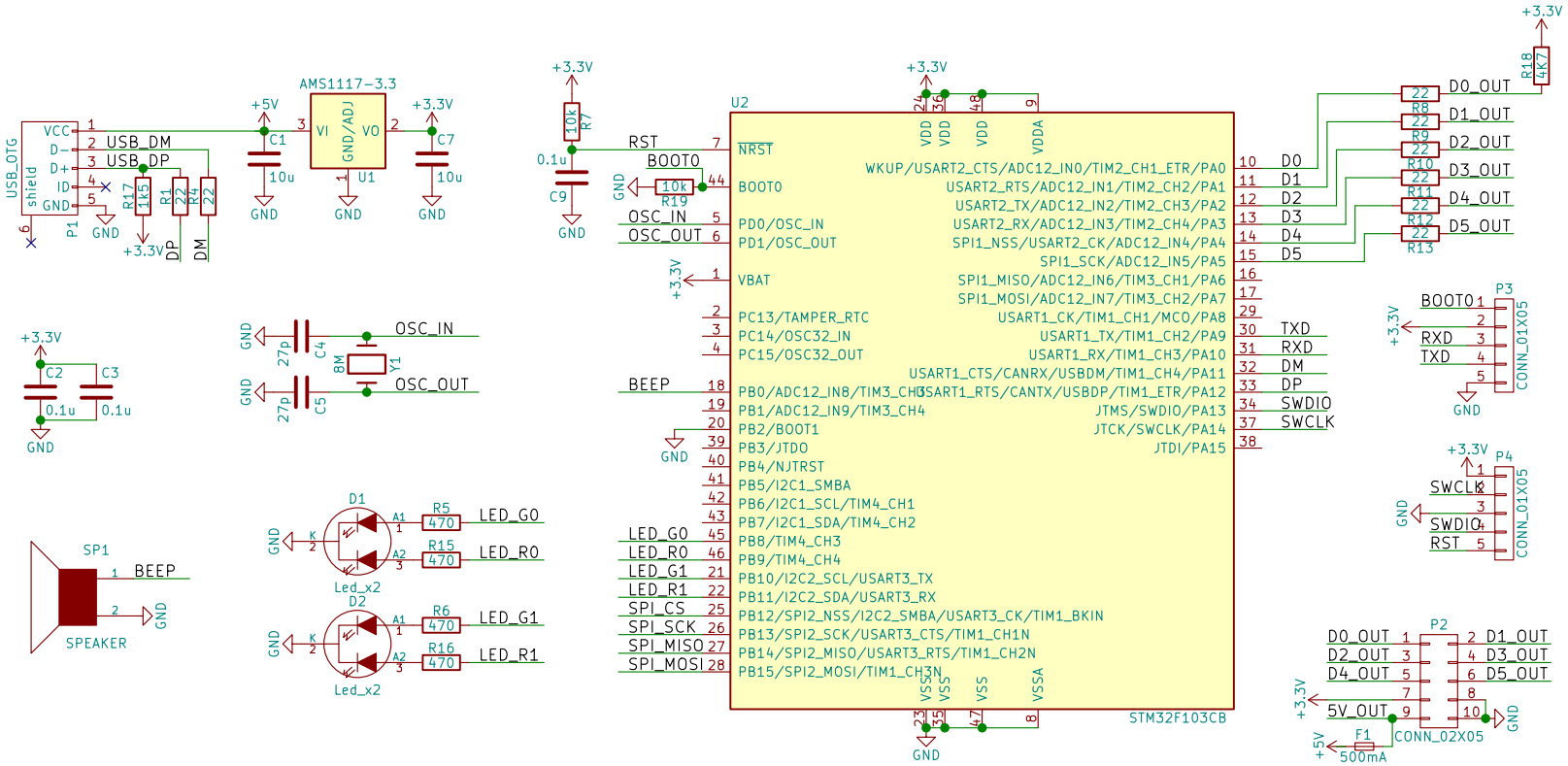

mcush designed by Peng Shulin

Sheet: /

File: tiny.sch

Title: Mcush tiny controller

Size: A4	Date: 2017-08	**Rev:**
KiCad E.D.A. kicad 4.0.2+dfsg1-stable		Id: 1/1