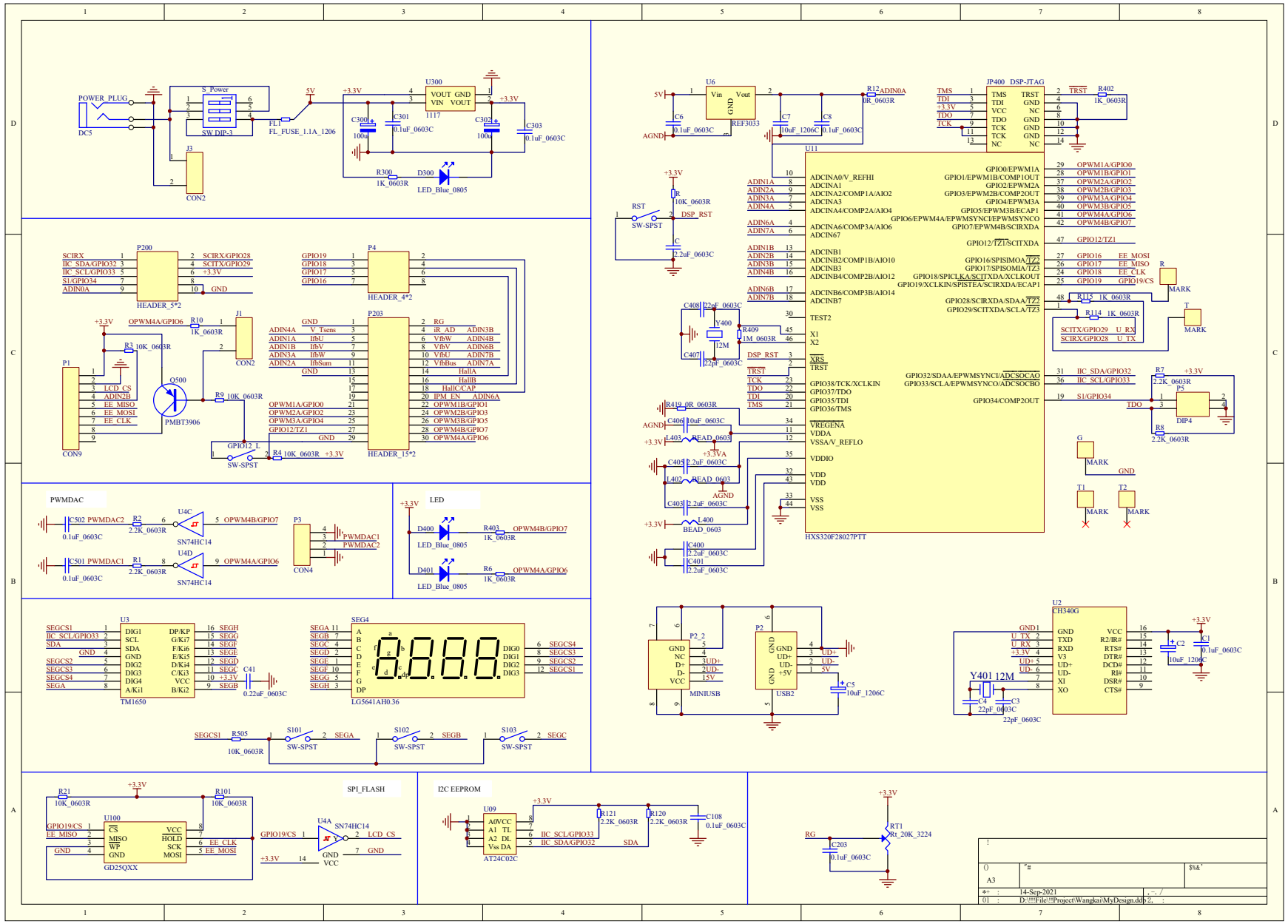
POWER_PLUG
DC5
S_Power
SW_DIP-3
J3
CON2
5V
FL1
FL_FUSE_1.1A_1206
+3.3V
U300
VOUT GND
VIN VOUT
1117
C300
100u
C301
0.1uF_0603C
C302
100u
C303
0.1uF_0603C
R300
1K_0603R
D300
LED_Blue_0805
P200
HEADER_5*2
SCIRX
IIC_SDA/GPIO32
IIC_SCL/GPIO33
S1/GPIO34
ADIN0A
SCIRX/GPIO28
SCITX/GPIO29
GND
P4
HEADER_4*2
GPIO19
GPIO18
GPIO17
GPIO16
P1
CON9
LCD_CS
ADIN2B
EE_MISO
EE_MOSI
EE_CLK
OPWM4A/GPIO6
R10
1K_0603R
R3
10K_0603R
Q500
PMBT3906
R9
10K_0603R
J1
CON2
P203
HEADER_15*2
ADIN4A
ADIN1A
ADIN1B
ADIN3A
ADIN2A
V_Tsens
IfbU
IfbV
IfbW
IfbSum
RG
iR_AD
VfbW
VfbV
VfbU
VfbBus
HallA
HallB
HallC/CAP
IPM_EN
OPWM1A/GPIO0
OPWM2A/GPIO2
OPWM3A/GPIO4
GPIO12/TZ1
OPWM1B/GPIO1
OPWM2B/GPIO3
OPWM3B/GPIO5
OPWM4B/GPIO7
GPIO12_L
SW-SPST
R4
10K_0603R
PWMDAC
C502 PWMDAC2
C501 PWMDAC1
0.1uF_0603C
R2
2.2K_0603R
R1
2.2K_0603R
U4C
U4D
SN74HC14
OPWM4B/GPIO7
OPWM4A/GPIO6
P3
CON4
PWMDAC1
PWMDAC2
LED
D400
D401
LED_Blue_0805
R403
R6
1K_0603R
U3
TM1650
SEGCS1
IIC_SCL/GPIO33
SDA
SEGCS2
SEGCS3
SEGCS4
SEGA
DIG1
SCL
SDA
GND
DIG2
DIG3
DIG4
A/Ki1
DP/KP
G/Ki7
F/Ki6
E/Ki5
D/Ki4
C/Ki3
VCC
B/Ki2
SEGH
SEGG
SEGF
SEGE
SEGD
SEGC
SEGB
+3.3V
C41
0.22uF_0603C
SEG4
LG5641AH0.36
DIG0
DIG1
DIG2
DIG3
SEGCS4
SEGCS3
SEGCS2
SEGCS1
R505
10K_0603R
S101
S102
S103
SW-SPST
U6
REF3033
Vin
Vout
GND
C6
0.1uF_0603C
C7
10uF_1206C
C8
0.1uF_0603C
R12
0R_0603R
ADIN0A
AGND
JP400_DSP-JTAG
TMS
TDI
VCC
TDO
TCK
NC
TRST
R402
1K_0603R
U11
HXS320F28027PTT
ADCINA0/V_REFHI
ADCINA1
ADCINA2/COMP1A/AIO2
ADCINA3
ADCINA4/COMP2A/AIO4
ADCINA6/COMP3A/AIO6
ADCIN67
ADCINB1
ADCINB2/COMP1B/AIO10
ADCINB3
ADCINB4/COMP2B/AIO12
ADCINB6/COMP3B/AIO14
ADCINB7
TEST2
X1
X2
XRS
TRST
GPIO38/TCK/XCLKIN
GPIO37/TDO
GPIO35/TDI
GPIO36/TMS
VREGENA
VDDA
VSSA/V_REFLO
VDDIO
VDD
VSS
GPIO0/EPWM1A
GPIO1/EPWM1B/COMP1OUT
GPIO2/EPWM2A
GPIO3/EPWM2B/COMP2OUT
GPIO4/EPWM3A
GPIO5/EPWM3B/ECAP1
GPIO6/EPWM4A/EPWMSYNCI/EPWMSYNCO
GPIO7/EPWM4B/SCIRXDA
GPIO12/TZ1/SCITXDA
GPIO16/SPISIMOA/TZ2
GPIO17/SPISOMIA/TZ3
GPIO18/SPICLKA/SCITXDA/XCLKOUT
GPIO19/XCLKIN/SPISTEA/SCIRXDA/ECAP1
GPIO28/SCIRXDA/SDAA/TZ2
GPIO29/SCITXDA/SCLA/TZ3
GPIO32/SDAA/EPWMSYNCI/ADCSOCAO
GPIO33/SCLA/EPWMSYNCO/ADCSOCBO
GPIO34/COMP2OUT
OPWM1A/GPIO0
OPWM1B/GPIO1
OPWM2A/GPIO2
OPWM2B/GPIO3
OPWM3A/GPIO4
OPWM3B/GPIO5
OPWM4A/GPIO6
OPWM4B/GPIO7
GPIO12/TZ1
EE_MOSI
EE_MISO
EE_CLK
GPIO19/CS
U_RX
U_TX
IIC_SDA/GPIO32
IIC_SCL/GPIO33
S1/GPIO34
R7
2.2K_0603R
P5
DIP4
R8
2.2K_0603R
R
MARK
T
MARK
G
MARK
T1
T2
MARK
MARK
R419
0R_0603R
C406
10uF_0603C
L403
BEAD_0603
+3.3VA
C405
2.2uF_0603C
L402
BEAD_0603
C403
2.2uF_0603C
L400
BEAD_0603
C400
2.2uF_0603C
C401
2.2uF_0603C
C408
22pF_0603C
Y400
12M
R409
1M_0603R
C407
22pF_0603C
DSP_RST
R
10K_0603R
C
2.2uF_0603C
RST
SW-SPST
P2_2
MINIUSB
P2
USB2
UD+
UD-
+5V
C5
10uF_1206C
U2
CH340G
GND1
U_TX
U_RX
+3.3V
UD+
UD-
V3
XI
XO
VCC
R2/IR#
RTS#
DTR#
DCD#
RI#
DSR#
CTS#
Y401 12M
C4
22pF_0603C
C3
22pF_0603C
C2
10uF_1206C
C1
0.1uF_0603C
R21
10K_0603R
R101
10K_0603R
U100
GD25QXX
CS
MISO
WP
GND
HOLD
SCK
MOSI
GPIO19/CS
EE_MISO
EE_CLK
EE_MOSI
SPI_FLASH
U4A
SN74HC14
LCD_CS
I2C EEPROM
U09
AT24C02C
A0VCC
A1 TL
A2 DL
Vss DA
IIC_SCL/GPIO33
IIC_SDA/GPIO32
SDA
R121
2.2K_0603R
R120
2.2K_0603R
C108
0.1uF_0603C
RG
C203
0.1uF_0603C
RT1
Rt_20K_3224
A3
14-Sep-2021
D:\!!!File\!!Project\Wangkai\MyDesign.ddb