LEHIGH UNIVERSITY

Bethlehem Bomb Squad: Payload Delivery

Design Review #1

Problem Statement.

The Bethlehem Fire Department Bomb squad needs an affordable, open-source, teleoperated solution to deploy a payload: an x-ray detector system to aid threat assessment of suspicious packages.

Relevant Background.

The Bethlehem Fire Department is equipped with a portable ~$65,000 NOVO X-ray detector that is used for identifying contents of suspicious packages on Explosive Ordnance Disposal (EOD) missions. This technology requires a bomb technician to manually deploy the system in close proximity to such packages. The budget for the bomb squad cannot immediately cover replacements, meaning that if the detector is damaged the department may be left without a way to assess risks.

Stakeholders.

Initial stakeholder research was conducted over the past two weeks. Over forty stakeholders were contacted, and over ten interviews and a site visit were completed. The interviewees included a mix of in-the-field personnel who are connected to bomb squads, and experts in the areas this capstone project will require knowledge in. From those who work with or adjacent to bomb squads, information about typical day-to-day operations, processes, and procedures was gathered. From the experts in academia, questions related to design and areas for further research were asked. Additional research on industry standards, environmental factors in Bethlehem, sensors and options for wireless connection, payload engineering and radiology integration, and electronic safety was also done.

Stakeholders were identified across the problem and projected solution space. This includes identifying parties across the industry vertical and horizontal (e.g. up the chain-of-command of the Bomb Squad vs. collaborators of the bomb squad). Within the vertical, key stakeholders such as the Bomb Squad beneficiaries (regional task force), technician trainers (FBI HDS School), and “clients” (venues) were contacted. Within the horizontal of the problem, common collaborators such as regional bomb squads, fire departments, police departments, EMS, were contacted. Within the horizontal of the solution space, stakeholders were identified who currently already use modular, open-source, affordable solutions. This largely includes computer science,

robotics, mechanics professors, and also engineers who have developed similar solutions in the past.

Target Market.

The target primary user for our project is the Bethlehem Fire Department Bomb Squad. The secondary users are other regional bomb squads that apply to some or all of the following traits:

- Low-Mid budget municipal departments
- Teams consisting of 2-10 technicians
- Moderate call volume requiring rapid deployment capability
- Urban/suburban opening environments
- Cross-trained bomb techs (personnel who cannot dedicate full-time hours to extended training)

Needs Statements.

Priority	Customer Need	Specification	Metric	Min	Max	Ideal
1	System accurately and reliably places payloads at the intended location	Position Accuracy	Millimeters	0	±10	0
		Camera Zoom Capability	Optical Zoom	10x	40x	30x
		Backlash	Degrees	0	5	0
		Tip Sag under Load	Millimeters	2	20	2
		Dynamic Damping	Seconds	0.5	5	1
		Haptic Awareness	Newton/Millimeter	0.1	10	2.5
2	System is reliable, has low-latency communication and situational awareness during operation	Wireless Latency	Milliseconds	10	500	50
		Wired Latency	Milliseconds	1	100	10
		Wireless Communication	Connections/Frequencies	1	None	3
		Control Range	Meters	15	500	150
		Range of Vision	Number of Cameras	1	6	>3
		Emergency Stop Latency	Milliseconds	10	500	10
3	System deploys and positions payload anywhwere within the required workspace	Operational Reach	Degrees of Freedom	4	7	6
		Dexterity	Angle (degrees)	90	360+	360
		Physical Reach	Meters	1	5	3
		Ground Clearance	Millimeters	75	200	150
		Runtime	Minutes	45	240	180
		Solution Effective Height*	Meters	0.5	2	0.75
		Solution Effective Width*	Millimeters	250	750	400
		Payload Weight	Kilograms	5	40	25
		Solution Weight	Kilograms	5	40	10
4	Gripper securley and effciently manipulates required payloads without damage	Gripper Load	Kilograms	10	None	25
		Opening Width	Millimeters	150	400	300
		Gripper Speed to Close	Seconds	1	10	1
		Gripper Compliance	Strain	0	1	
5	System is affordable and creating/aquiring parts is	Cost	Dollars	$250	$5,000	$1,000
		Ease of Replaceability	Number of Vendors	1	10	2
6	System is intuitive to operate and quick to deploy	Deploy/Setup Time	Minutes	2	30	5
		Onboarding Time	Days	1	7	1
		Controller Weight	Kilograms	0.5	5	1
		Ease of Controlling	Likert Scale	1	5	5
		Ease of Assembly	Likert Scale	1	5	5
7	System is easy to mantain	Ease to Clean	Likert Scale	1	5	5
		Modularity	Commercial Off-the-Shelf Ratio	75	100	100

*Based on size of US door

Interview Insights and Need Statements

Stakeholder interviews continue to be scheduled and refined. However, distillings from existing interviews have found:

- Bomb squads can make purchases under $5,000 (threshold) without explicit approval.
- Current tools lack depth perception, arm range of motion, and dependable grippers.
- Current tools interact with urban terrain the most: stairs, curbs, interior surfaces.
- Most agencies use common/standard frequencies that cannot be used for an additional solution.

More quantitative findings were compiled and by consensus, agreed upon based on research and customer discovery interviews. Specifications (dimensions) were identified and metrics (units) were found. Based on the target market, the min, max, and ideal (constraints) were elaborated.

Standards.

Agency Standards

The Federal Emergency Management Agency, or FEMA, categorizes The Bethlehem Bomb Squad as a Type III team, which is required to have at least two Bomb Technicians, an equipment vehicle, and the capability to handle small incidents. Their purchase limit without approval from higher-up authorities is $5,000. However, any equipment that becomes widely used by many agencies becomes standard issue, and approval is no longer required once a product reaches this standard.

Robot Capabilities

The Bethlehem Bomb Squad currently uses a couple robots that share similar features:

- Arm and body controllable by one person with a tablet or switchboard
- A camera on the body of the robot and arm with ability to switch between views
- Tracks AND removable tire-wheels
- 4-6 hour battery life
- 150 m communication range between controller and robot in ideal, open-space conditions
- Arm with three joints and a two-pincer claw which can rotate independent of arm

Patent Standards

Existing robots with a moving body and arm have patents that generally show an actuator at the base of each arm joint, a minimum of two cameras: one on the arm and another on the body, with some robots having a camera for each joint. A patented robot specialized in picking up a wide range of objects called the Eye in Hand Robot also utilizes more cameras in its claws to determine more information on handling.

Competitors.

MMP 30 EOD Mobile Robot System

FLIR Centaur

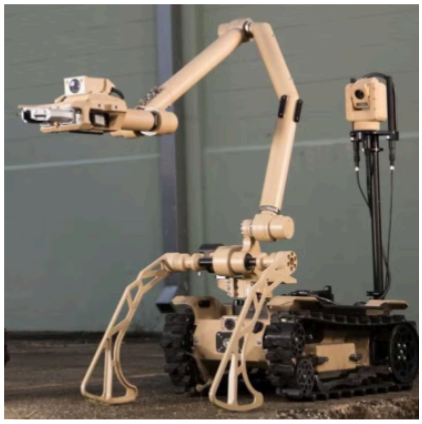

L3 Harris T4

	MMP 30 EOD Mobile Robot System	FLIR Centaur	L3 Harris T4
Price	$29,000	~$130,000	~$300,000
Weight	50 lbs	<164 lbs	226 lbs
Maximum Payload Weight	15 lbs	32 lbs near chassis 15 lbs at full extension	121 lbs near chassis 44 lbs at full extension
Arm Reach Distance	30”	75.5” vertical	80” horizontal 98” vertical
Runtime	1-2 hours	Up to 8 hours	7+ hours
Degrees of Freedom	4	5	5
Cameras	3 cameras (an inferred pan/tilt camera, a gripper camera and rear facing camera)	4 cameras (1 pan camera, 3 tilt cameras)	2 cameras (a gripper camera and a mast camera with 120x zoom)
Climbable Inclines	40° inclines and standard curb height obstacles	43° inclines and stairs and 6” obstacles	>45° inclines and stairs
Additional Features		Person detection (up to 300m in low light and 600m in daytime), modular payload system	Haptic feedback, force sensing gripper, EMI-shielded, laser rangefinder

Design Ideas.

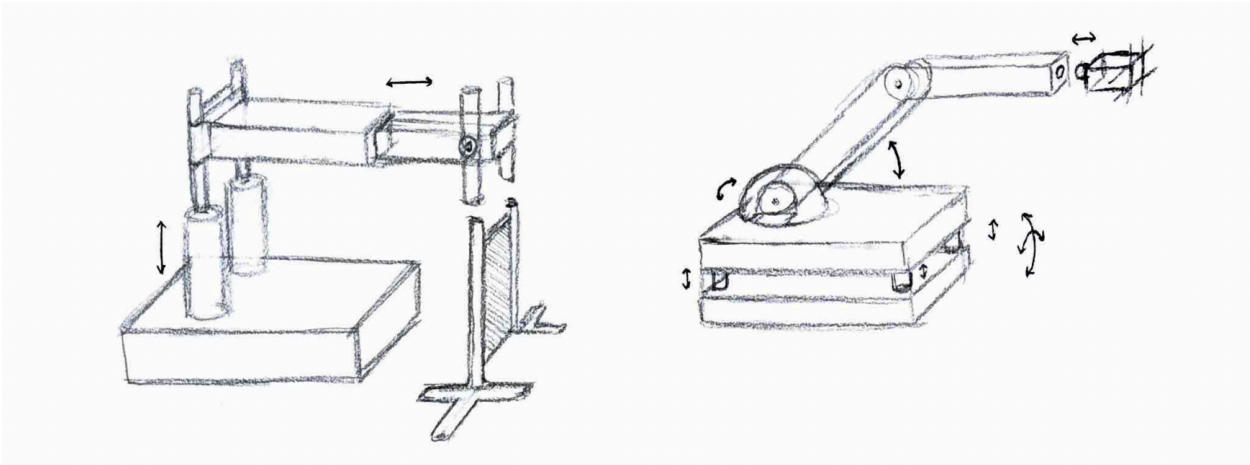

Currently, three approaches are being explored for possible solutions. One simplistic solution (left) utilizes a set of prismatic linear actuators with a total of DOF = 2 for horizontal extension and vertical elevation. Pins attached to the NOVO DR detector will allow placement in a controlled manner. Such a design would use gyroscopic effect via ball bearings or weights such that the plane of the detector is always perpendicular to the surface. The other proposed design (right) is a simple, modular robotic arm. The base would be fixed to four linear actuators that permit pitch and yaw when non-equal movements occur, and the base of the arm link would be attached to a rotating base with permitting roll. A simple link via direct drive or CAPSTAN would permit vertical translation. Then a *modular* interchangeable design for a secondary arm composed of aluminum extrusions would be attached, where each member can asynchronously design different open-source attachments.

Timeline.

The proposed timeline below is subject to change but was drafted for plans immediately after the Design Review and Spring Break (week 7). The most immediate tasks are prototyping in cheap and iterative ways the best and most scalable manner to deliver the payload. This largely means exploring mechanisms to achieve the minimum of 2DOF up to the ideal 6DOF, the pros and cons of each method, which would then be explored in greater detail for more manufactured solutions in upcoming weeks. This would line up with the coding and controls once mechanisms are identified, and then attachments and modular components would be delegated among members to permit multiple functions. Testing and debugging is critical to permit the solution to be field-eligible. Attached is the current draft for the next steps until the end of the semester (Week 15).

LEHIGH UNIVERSITY

	Week 8	**Week 9**	**Week 10**	**Week 11**	**Week 12**	**Week 13**	**Week 14**	**Week 15**
Tasks	*March 15-21*	*March 22-28*	*March 29-April 4*	*April 5-11*	*April 12-18*	*April 19-25*	*April 26-May 1*	May 2-9
Prototyping: Exploring Mechanisms								
Protyping: Base Mechanism								
Protyping: Arm Solution								
Coding and Controls								
Attachments and Modularity								
Testing/Debugging								
Integration with Chassis								
Documentation								
Presentation								

LEHIGH UNIVERSITY

Appendix A. Stakeholder List (as of Mar 5, 2026)

USBTA bomb training for technicians	socials@usbta.us (860) 685 - 8000	Kelly	Feb 12	Sent
Deep Robotics US	info@deeprobotics.us	jr	Feb 10	Sent
Northrop Grumman Remotec	Online website	jr	Feb 10	Sent
Montgomery County Sherrifs Office	cdalessandro@ncem-pa.org	jr	Feb 10	Sent
Venues: Wind Creek		jr	Feb 10	Ongoing
Lehigh Valley Airport		jr	Feb 10	Deferred
Port Authority Police Department	201 239-3500	jr		
PAPD Counterterrorism Hotline	800-828-7273	jr		
Essex County Bomb Squad	973-621-4111	jr		
Scranton Bomb Squad	Scranton311@scrantonpa.gov	jr	Feb 10	Sent
Penn State Police	https://www.police.psu.edu/contact-us	jr	Feb 10	Sent
NYPD Commisioner's Office	https://www.nyc.gov/site/nypd/about/about-nypd	jr	Feb 10	Sent
Proprioception Robotics		jr	Feb 16	Completed
Stamford CT Bomb Squad	(203) 977 -4459			
Shajahan Jagtiani - Program Manager for USBTA	sjagtiani@usbta.us	Kelly	Feb 12	Completed!
Profesor Cristi				
Simeon Krizan (Wilbur)	sik223@lehigh.edu	paige	2/16	sent
Profesor Saldaña	saldana@lehigh.edu	Ellie	3/5	Scheduled 3/5 1
Hannah Peik				
Brian Slocum				
Kelly Zona (Wilbur electronics. Has experience with military robotics)	klz222@lehigh.edu	paige	2/19	Scheduled 2/19
CS professor about alternatives to bluetooth/secure connection options				
Prof Mooi Choo Chua	mcc7@lehigh.edu	Ellie	Feb 17	Complete
Chris Posivak (CS student, asked about questions to ask Prof. Chua)		Ellie	2/12	Complete
Professor Ebru Demir				

stakeholder name	contact	who is contacting them	date	Status
capt fuller	LFuller@bethlehem-pa.gov	Patrick Tillinghast	2/9	replied
brian slocum				
Lt. Chad Ege(Allentiwn Fire Department Bomb Squad)	chad.ege@allentownpa.gov	patrick	2/16	sent
Sgt. Tim Dolena (PA state ploice hazard devices and explosives unit)	tdolena@pa.gov	Patrick	2/16	sent
Sgt. Mike Agnes(New Jersey State police bomb squad)	6391@njspabu.org	patrick	2/16	sent
Special Agent Bomb Techinican Jard Witmeir (FBI)	jwwitmier@gbi.gov	Patrick	2/11	sent
bomb squad allentown				
sgt. Rob Flores, K9 Niko (allentown)	robert.flores@allentownpa.gov, (610) 437-7713	paige	2/10	sent
Ofc. Andrew Fegely, K9 Jax (allentown)	andrew.fegely@allentownpa.gov , (610) 437-7713	Patrick		
Ofc, Austin Ortwein, K9 Athena (allentown)	austin.ortwein@allentownpa.gov, (610) 437-7713			
Ofc. Robert Carbaugh, K9 Romke (allentown)	robert.carbaugh@allentownpa.gov, (610) 437-7713			
Ofc. Neil Battoni, K9 Luka (allentown)	neil.battonijr@allentownpa.gov, (610) 437-7713	Ellie (wait on)		
cheif of police, Gregory Gottschall (bethlehem)	ggottschall@bethlehemtownship.org (610)-814-6410			
captain Shaun Powell (bethlehem police)	spowell@bethlehemtownship.org 610-8140-6410,			
sgt. joseph Iannetta (allentown emergency response team)	joseph.iannetta@allentownpa.gov, (610) 437-7753 x2431			
Director Robert Novatnack (bethlehem emergency response	610-865-7000			
officer joespeh freer	jcf325@lehigh.edu	paige	2/20	zoom
Philadephia police department commisioner's office	police.commissioner@phila.gov (215) 686-3280	Ellie	2/10	sent
FBI Philadelphia Office		jr		
FBI Newark Office	(973) 792-3000	jr		
NEPRCTTF	(570)-877-4082	jr	Feb 10	Completed
Venues: Steel Stacks		jr	Feb 10	Ongoing
Professor of Radiology (Northhampton commnunity college)	tlenhart@northampton.edu	Ellie		
Indianapolis Police Dept contact	IMPD.PublicAffairs@indy.gov.	Ellie	2/13	got a response,
USBTA bomb training for technicians	socials@usbta.us (860) 685 - 8000	Kelly	Feb 12	Sent

Appendix B. NOVO DR X-ray Imaging System Dimensions.

- NOVO 15WN: – Imaging area: 231mm x 284mm (9.1″ x 11.2″) – Detector Thickness: 15.6mm (0.6″) – Detector Size: 269mm x 330mm (10.6″ x 13″) – Imaging Area / Detector Size: 74% Active Area – Detector Weight: ~2.5 kg (5.5 lbs) – Bit Depth: 16 bit latest generation – Pixel Size: 148 µm – Detector Maximum Load: 150kg (330 lbs)
- NOVO 22WN: – Imaging area: 355mm x 426mm (14” x 16.8”) – Detector Thickness: 15.6mm (0.6″) – Detector Size: 385mm x 462mm (15.2″ x 18.2″) – Imaging Area / Detector Size: 85% Active Area – Detector Weight: ~4.5 kg (9.92 lbs) – Bit Depth: 16 bit latest generation – Pixel Size: 148 µm – Detector Maximum Load: 150kg (330 lbs)