LEHIGH UNIVERSITY

Bethlehem Bomb Squad: Payload Delivery

Design Review #1

Problem Statement.

The Bethlehem Fire Department Bomb squad needs an affordable, open-source, teleoperated solution to deploy a payload: an x-ray detector system to aid threat assessment of suspicious packages.

Relevant Background.

The Bethlehem Fire Department is equipped with a portable ~$65,000 NOVO X-ray detector that is used for identifying contents of suspicious packages on Explosive Ordnance Disposal (EOD) missions. This technology requires a bomb technician to manually deploy the system in close proximity to such packages. The budget for the bomb squad cannot immediately cover replacements, meaning that if the detector is damaged the department may be left without a way to assess risks.

Stakeholders.

The stakeholders of our project are as follows: Captain Lucus Fuller, Bethlehem Fire Department Bomb Squad; Lt. Chad Edge, Allentown Fire Department Bomb Squad, Joseph Freer, LUPD & former NYPD robotics technician; Sgt. Mike Anges, New Jersey State Police Bomb Squad.

Target Market.

The target primary user for our project is the Bethlehem Fire Department Bomb Squad. The secondary users are other regional bomb squads that apply to some or all of the following traits:

- Low-Mid budget municipal departments
- Teams consisting of 2-10 technicians
- Moderate call volume requiring rapid deployment capability
- Urban/suburban opening environments
- Cross-trained bomb techs (personnel who cannot dedicate full-time hours to extended training)

LEHIGH UNIVERSITY

Needs Statements.

Priority	Customer Need	Specification	Metric	Min	Max	Ideal
5	System deploys and positions payload anywhwere within the required workspace	Operational Reach	Degrees of Freedom	4	7	6
		Dexterity	Angle (degrees)	90	360+	360
		Physical Reach	Meters	1	5	3
		Ground Clearance	Millimeters	75	200	150
		Runtime	Minutes	45	240	180
		Solution Effective Height*	Meters	0.5	2	0.75
		Solution Effective Width*	Millimeters	250	750	400
		Payload Weight	Kilograms	5	40	25
		Solution Weight	Kilograms	5	40	10
2	System is intuitive to operate and quick to deploy	Deploy/Setup Time	Minutes	2	30	5
		Onboarding Time	Days	1	7	1
		Controller Weight	Kilograms	0.5	5	1
		Ease of Controlling	Likert Scale	1	5	5
		Ease of Assembly	Likert Scale	1	5	5
7	System is easy to mantain	Ease to Clean	Likert Scale	1	5	5
		Modularity	Commercial Off-the-Shelf Ratio	75	100	100
1	System is reliable, has low-latency communication and situational awareness during operation awareness during operation	Wireless Latency	Milliseconds	10	500	50
		Wired Latency	Milliseconds	1	100	10
		Wireless Communication	Connections/Frequencies	1	None	3
		Control Range	Meters	15	500	150
		Range of Vision	Number of Cameras	1	6	>3
		Emergency Stop Latency	Milliseconds	10	500	10
3	System is affordable and creating/aquiring parts is simple	Cost	Dollars	$250	$5,000	$1,000
		Ease of Replaceability	Number of Vendors	1	10	2
6	Gripper securley and effciently manipulates required payloads without damage	Gripper Load	Kilograms	10	None	25
		Opening Width	Millimeters	150	400	300
		Gripper Speed to Close	Seconds	1	10	1
		Gripper Compliance	Strain	0	1	
4	System accurately and reliably places payloads at the intended location	Position Accuracy	Millimeters	0	±10	0
		Camera Zoom Capability	Optical Zoom	10x	40x	30x
		Backlash	Degrees	0	5	0
		Tip Sag under Load	Millimeters	2	20	2
		Dynamic Damping	Seconds	0.5	5	1
		Haptic Awareness	Newton/Millimeter	0.1	10	2.5

Standards. **Standards: The target specifications are informed by science/competitive products/standards, etc. While there is likely some guesswork involved, the rationale is reasonable.**

Patented Robot designs:
Robots with arms usually have an actuator at the base of each joint of the arm
Have at minimum a camera on the body of the robot and on the arm
Claw OR base of arm can rotate

Agency Standards

The Federal Emergency Management Agency, or FEMA, categorizes The Bethlehem Bomb Squad as a Type III team, which is required to have at least two Bomb Technicians, an equipment vehicle, and the capability to handle small incidents. Their purchase limit without approval from higher-up authorities is $5,000. However, any equipment that becomes widely

used by many agencies becomes standard issue, and approval is no longer required once a product reaches this standard.

Robot Capabilities

The Bethlehem Bomb Squad currently uses a couple robots that share similar features:

- Arm and body controllable by one person with a tablet or switchboard
- A camera on the body of the robot and arm with ability to switch between views
- Tracks AND removable tire-wheels
- 4-6 hour battery life
- 150 m communication range between controller and robot in ideal, open-space conditions
- Arm with three joints and a two-pincer claw which can rotate independent of arm

Patent Standards

Existing robots with a moving body and arm have patents that generally show an actuator at the base of each arm joint, a minimum of two cameras: one on the arm and another on the body, with some robots having a camera for each joint. A robot specialized in picking up a wide range of objects (__) also utilizes more cameras in its claws to determine depth, size

LEHIGH UNIVERSITY

Competitors

MMP 30 EOD Mobile Robot System

FLIR Centaur

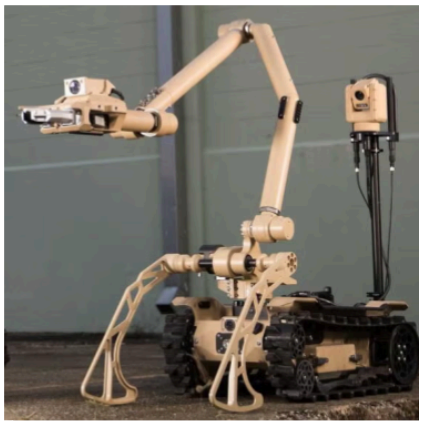

L3 Harris T4

	MMP 30 EOD Mobile Robot System	FLIR Centaur	L3 Harris T4
Price	$29,000	~$130,000	~$300,000
Weight	50 lbs	<164 lbs	226 lbs
Maximum Payload Weight	15 lbs	32 lbs near chassis 15 lbs at full extension	121 lbs near chassis 44 lbs at full extension
Arm Reach Distance	30”	75.5” vertical	80” horizontal 98” vertical
Runtime	1-2 hours	Up to 8 hours	7+ hours
Degrees of Freedom	4	5	5
Cameras	3 cameras (an inferred pan/tilt camera, a gripper camera and rear facing camera)	4 cameras (1 pan camera, 3 tilt cameras)	2 cameras (a gripper camera and a mast camera with 120x zoom)
Climbable Inclines	40° inclines and standard curb height obstacles	43° inclines and stairs and 6” obstacles	>45° inclines and stairs
Additional Features		Person detection (up to 300m in low light and 600m in daytime), modular payload system	Haptic feedback, force sensing gripper, EMI-shielded, laser rangefinder

Design Ideas

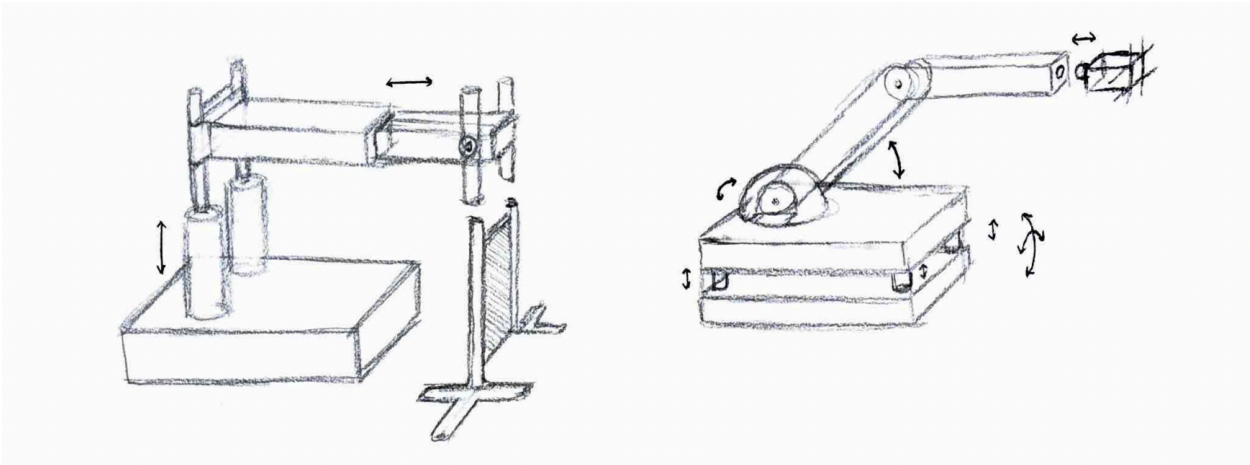

Currently, three approaches are being explored for possible solutions. One simplistic solution (left) utilizes a set of prismatic linear actuators with a total of DOF = 2 for horizontal extension and vertical elevation. Pins attached to the NOVO DR detector will allow placement in a controlled manner. Such a design would use gyroscopic effect via ball bearings or weights such that the plane of the detector is always perpendicular to the surface. The other proposed design (right) is a simple, modular robotic arm. The base would be fixed to four linear actuators that permit pitch and yaw when non-equal movements occur, and the base of the arm link would be attached to a rotating

Timeline

The proposed timeline below is subject to change but was drafted for plans immediately after the Design Review and Spring Break (week 7). The most immediate tasks are prototyping in cheap and iterative ways the best and most scalable manner to deliver the payload. This largely means exploring mechanisms to achieve the minimum of 2DOF up to the ideal 6DOF, the pros and cons of each method, which would then

	Week 8	**Week 9**	**Week 10**	**Week 11**	**Week 12**	**Week 13**	**Week 14**	**Week 15**
Tasks	*March 15-21*	*March 22-28*	*March 29-April 4*	*April 5-11*	*April 12-18*	*April 19-25*	*April 26-May 1*	May 2-9
Prototyping: Exploring Mechanisms								
Protyping: Base Mechanism								
Protyping: Arm Solution								
Coding and Controls								
Attachments and Modularity								
Testing/Debugging								
Integration with Chassis								
Documentation								
Presentation								

Design Ideas

Timeline.