The D-workx 234 is an easy to assemble Core XYZ design DIY 3D printer using GT2 – 6 mm belts only. Check first if all XYZ V-slot profiles for the cube have the exact same length and the ends are tapped with M5 thread. The cube is the base of the printer and relies on precision in squareness!

Enjoy the building.

D-workx 234 building manual by Jupa Creations

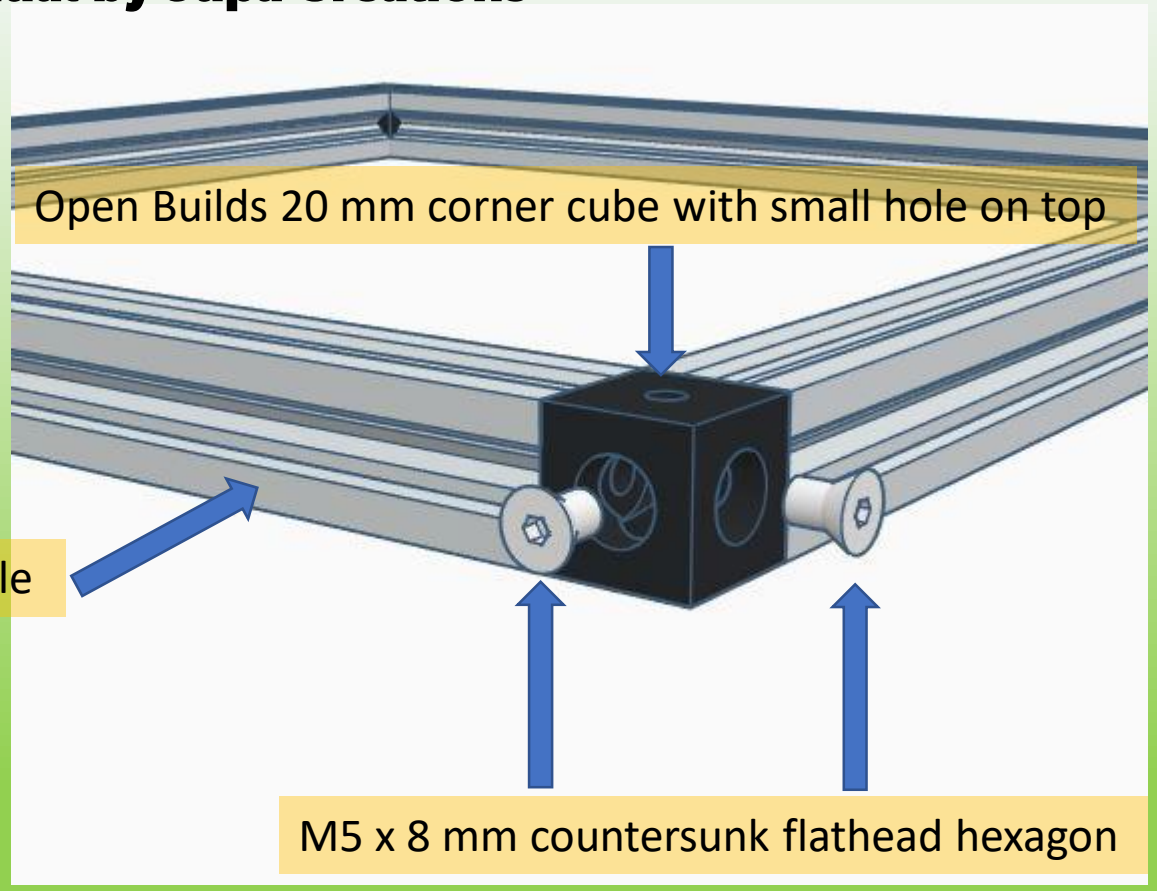

On a flat surface make 2 x a square from 4 x 2020 V-slot profiles and 4 x 20 mm corner cubes.
The small hole of the corner cubes should point upwards.
V-slot profiles ends need to be tapped with M5 thread.
V-slot profiles need to be of exact same length and perfectly cut straight @ 90 degree angles

Step 1

Open Builds 20 mm corner cube with small hole on top

On a flat surface add 2 x 2020 V-slot profiles with M5 x 8 mm countersunk flathead hexagon screws.
Turn the structure 90 degrees and add 1 x 2020 V-slot profile with M5 x 8 mm countersunk flathead hexagon screws.
Turn the structure 90 degrees and add 1 x 2020 V-slot profile with M5 x 8 mm countersunk flathead hexagon screws.

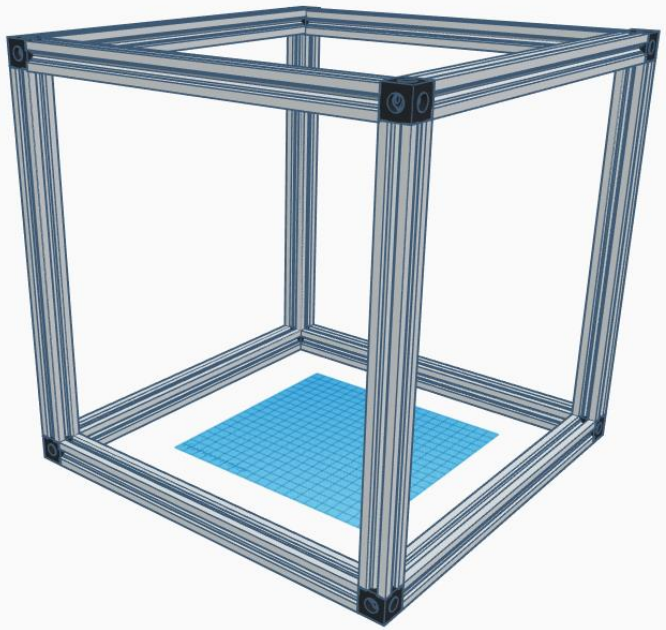

On a flat surface add the square prepared in Step 1 with M5 x 8 mm countersunk flathead hexagon screws. Turn the structure each time 90 degrees so it is on a flat surface when adding the M5 x 8 mm countersunk flathead hexagon screws. Now the cube is ready. Retighten all corner screws once again.

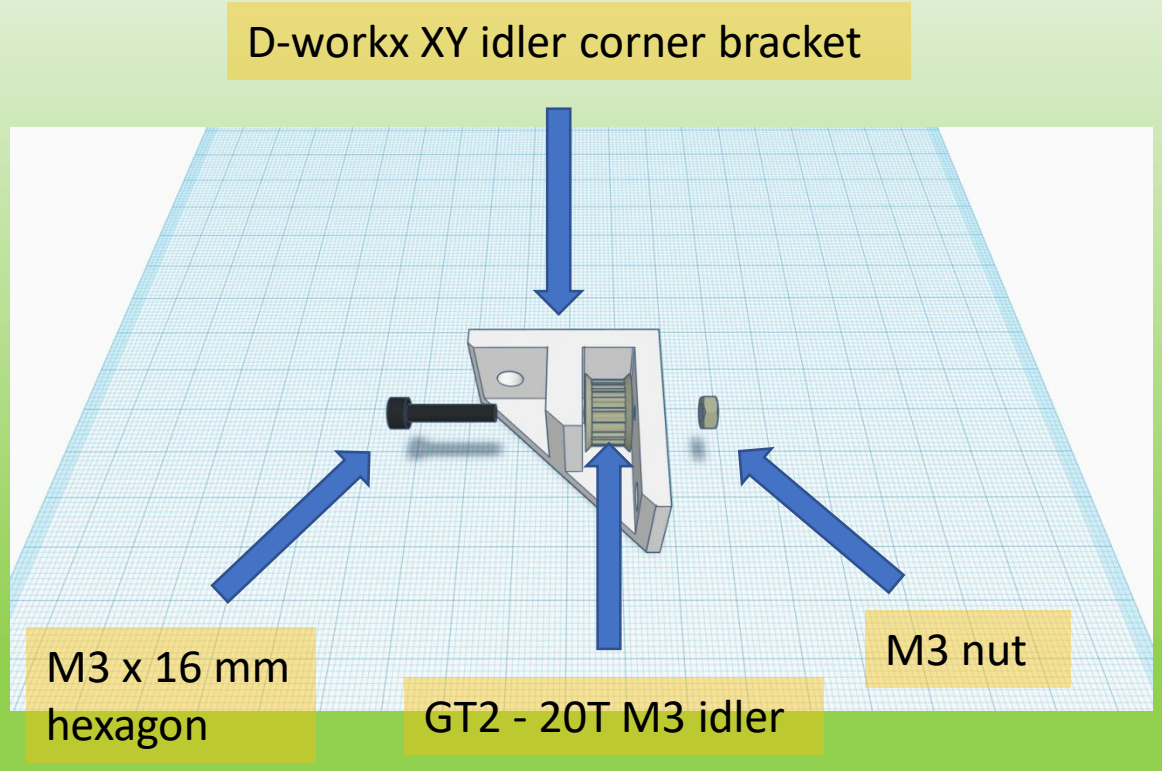

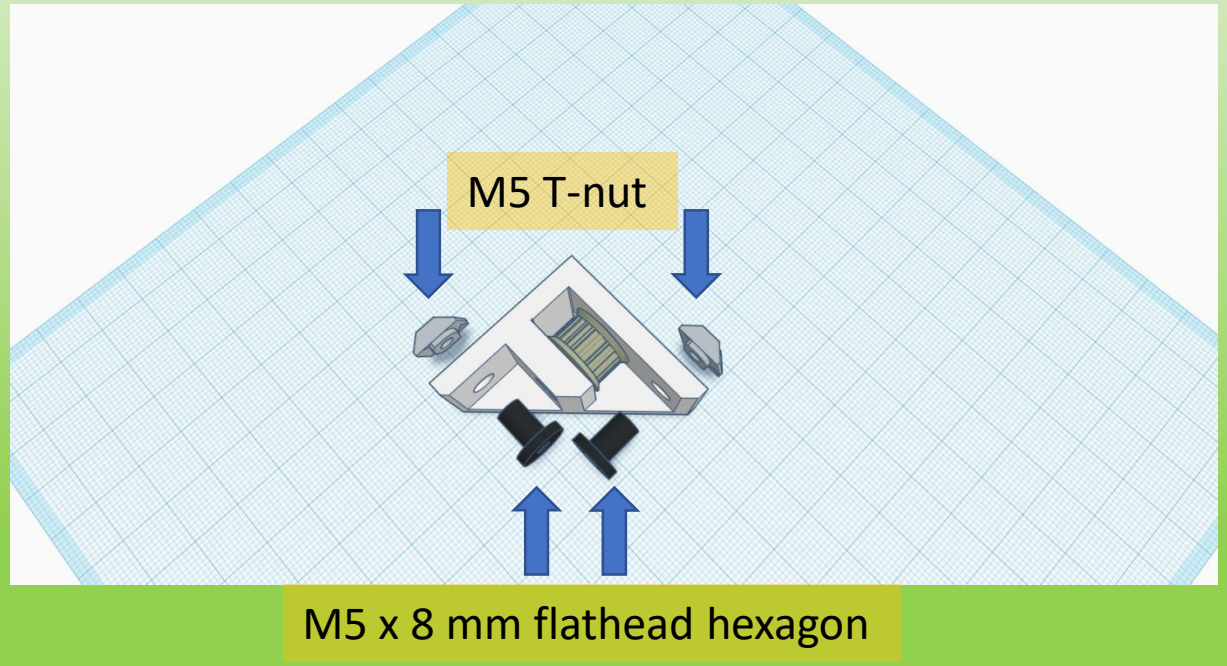

Fit the GT2 – 20T 6 mm M3 idler in the XY idler corner bracket and secure it with a M3 x 16 mm hexagon screw and a M3 nut. Do not overtighten the screw. The idler must run free. Fit the M5 x 8 mm flathead hexagon screws onto the M5 T-nuts.

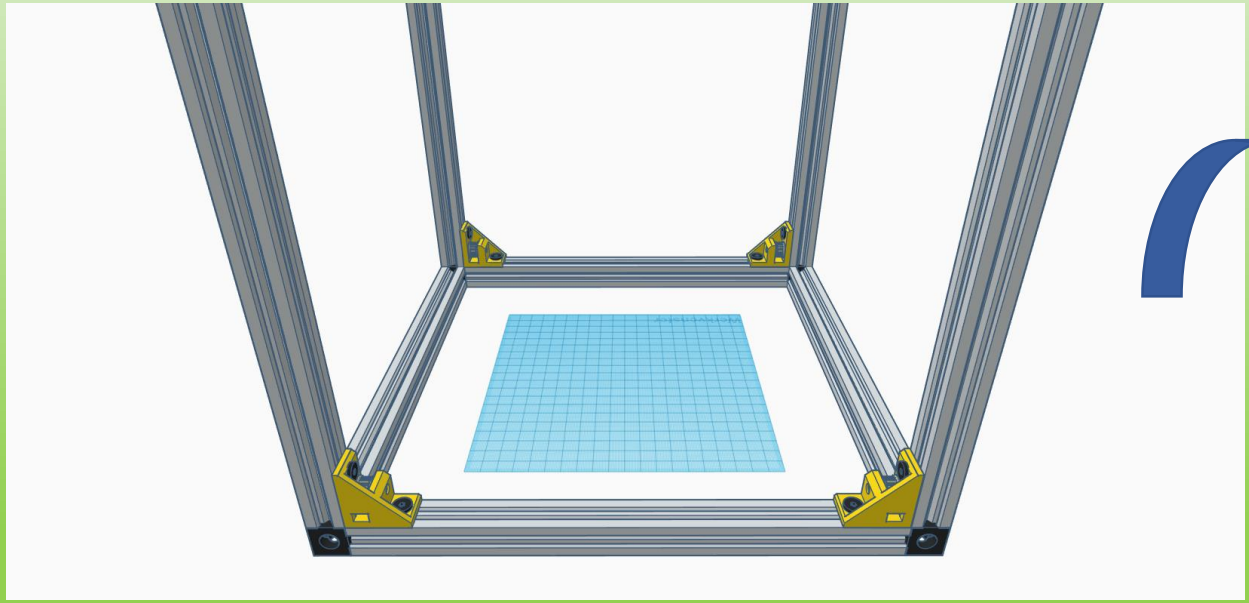

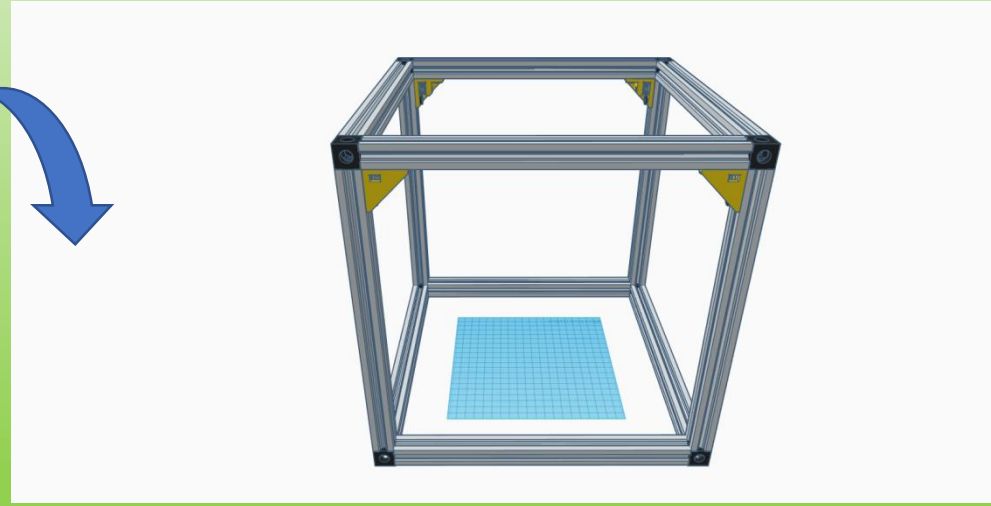

Fit the XY idler corner bracket in each of the 4 corners and secure the M5 x 8 mm flathead hexagon screws. Then turn the cube 180 degrees so the XY idler brackets are on top.

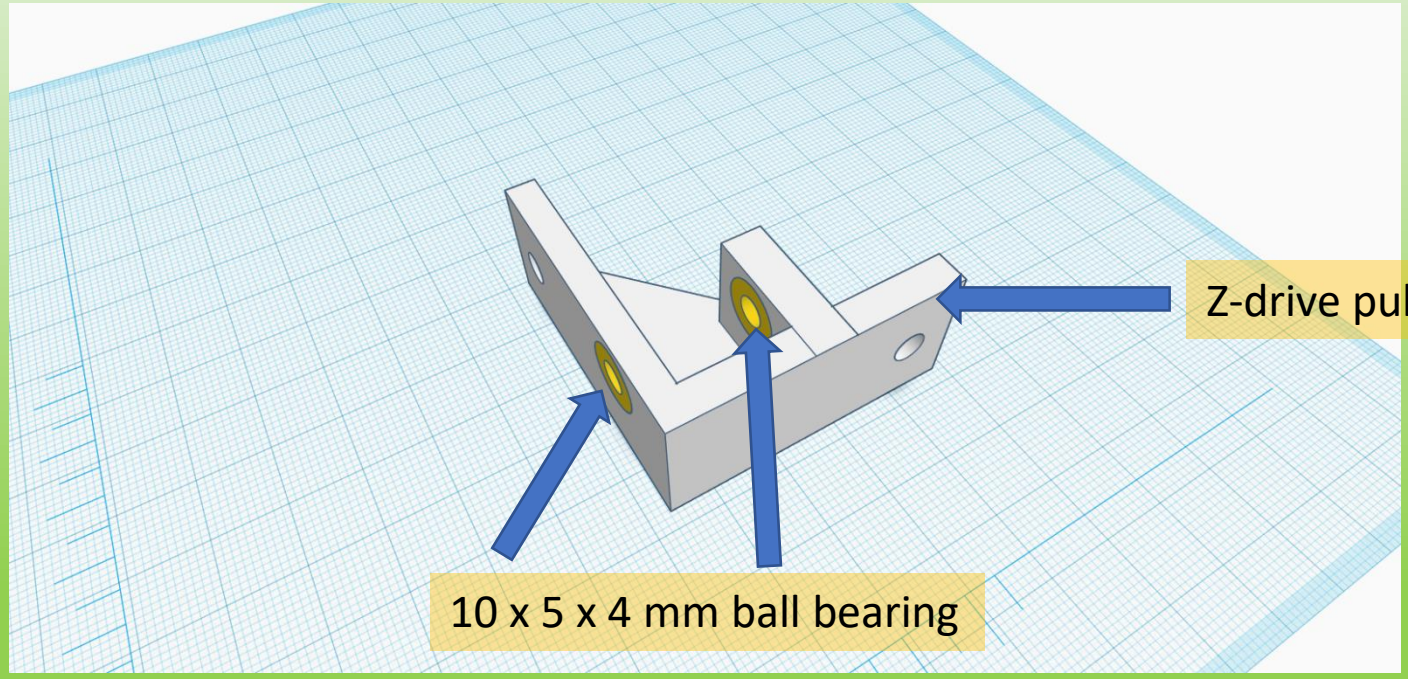

Place the 10 x 5 x 4 mm ball bearings in the Z-drive pulley bracket.

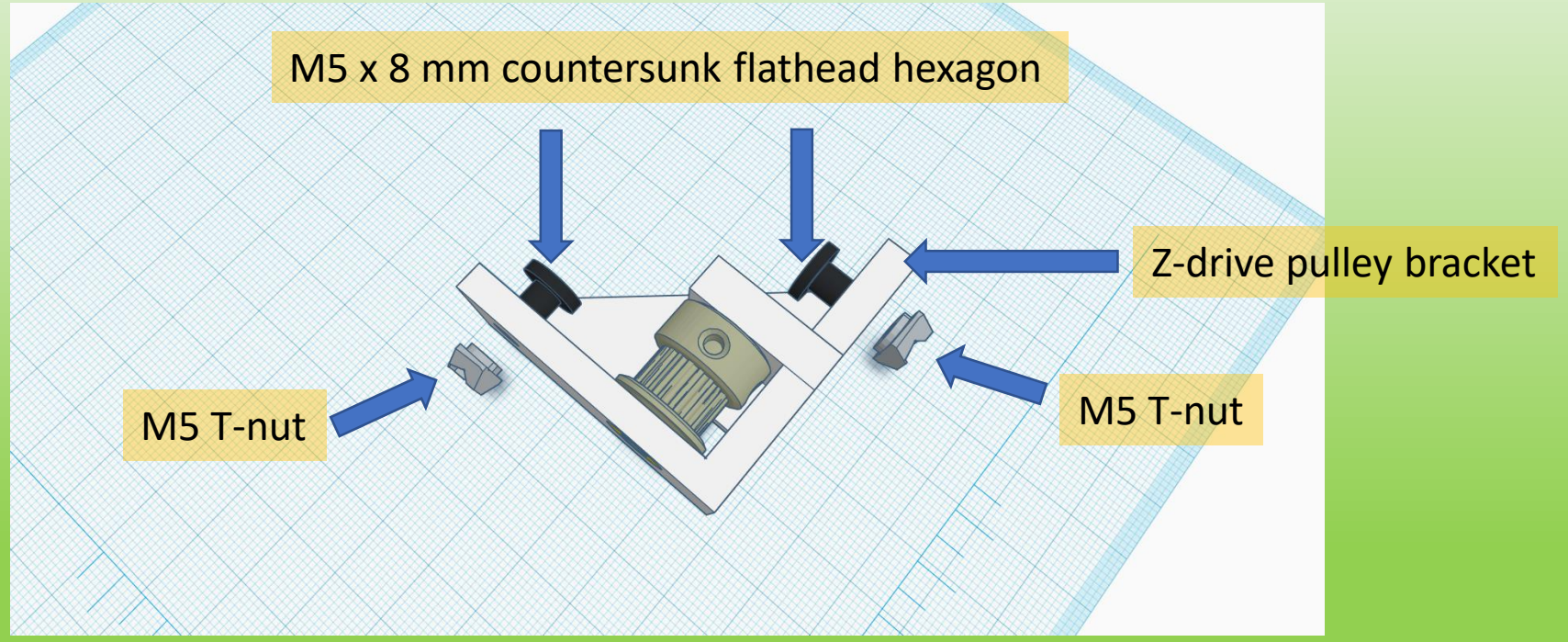

Place the GT2 20T 6 mm drive pulley in the Z-drive pulley bracket.
Fit the M5 x 8 mm flathead hexagon screws onto the M5 T-nuts.
Do this for all 4 –drive pulley brackets.

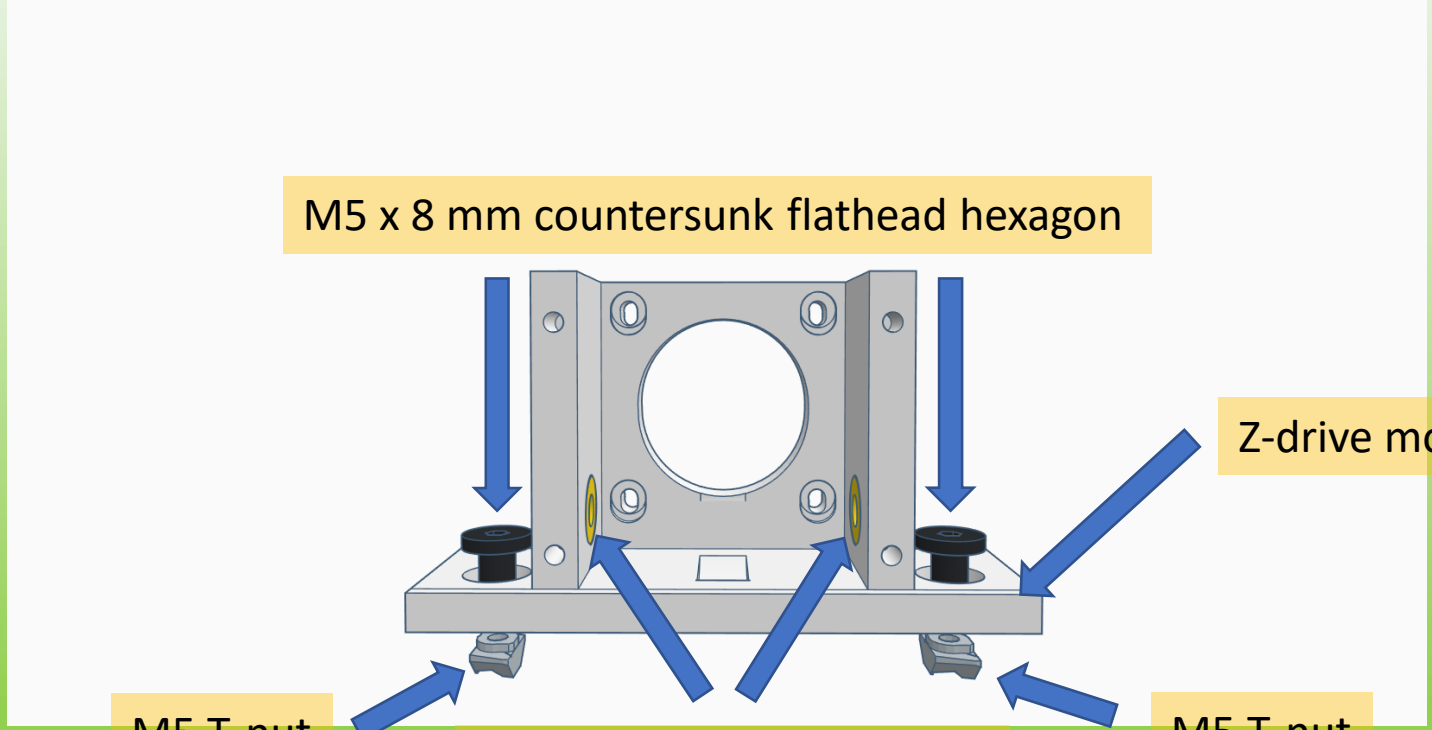

Fit the 10 x 5 x 4 mm ball bearings in the Z-drive motor bracket
Fit the M5 x 8 mm flathead hexagon screws onto the M5 T-nuts.

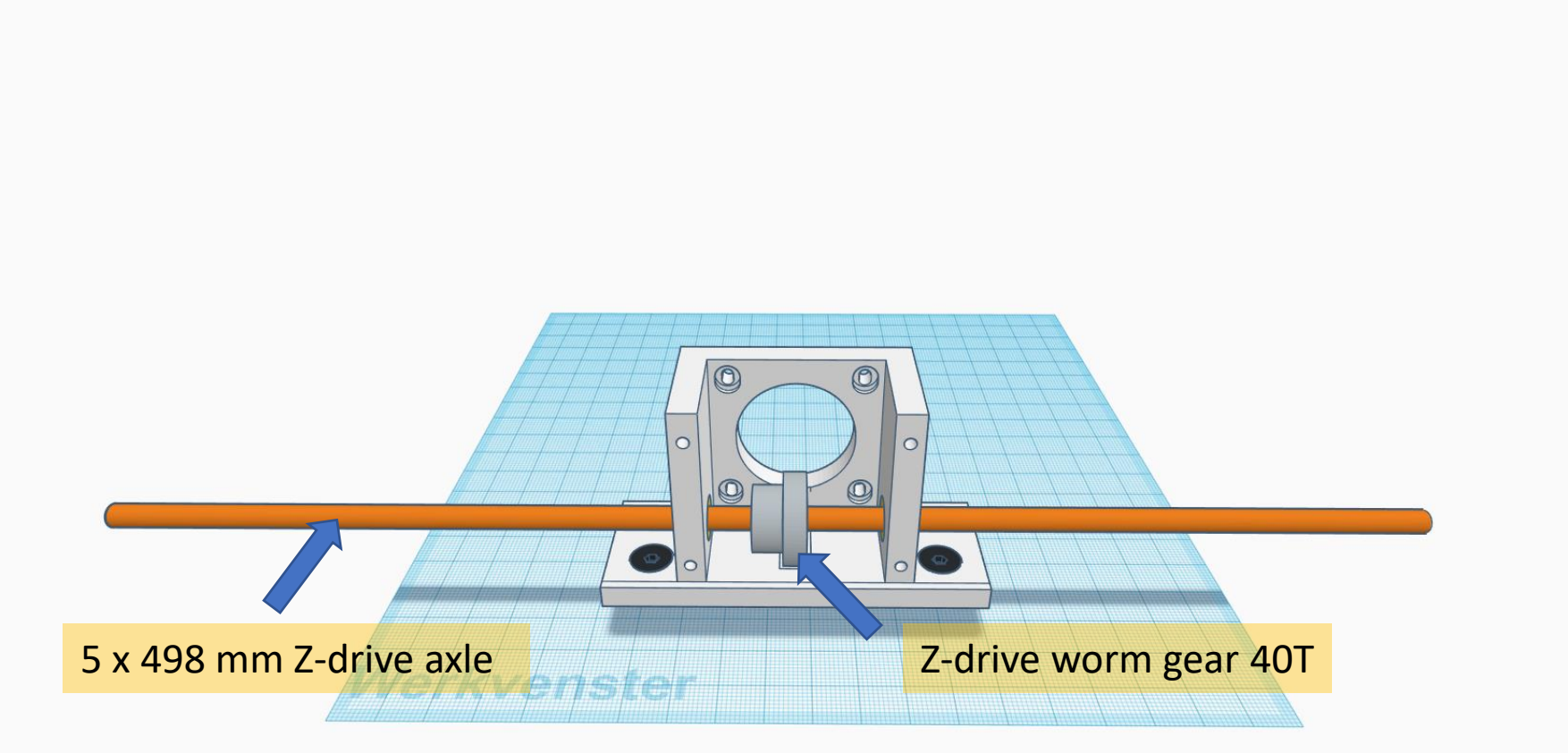

Place the Z-drive worm gear in the center of the Z-drive motor bracket.
Slide the Z-drive axle through the bearings and the Z-drive worm gear.

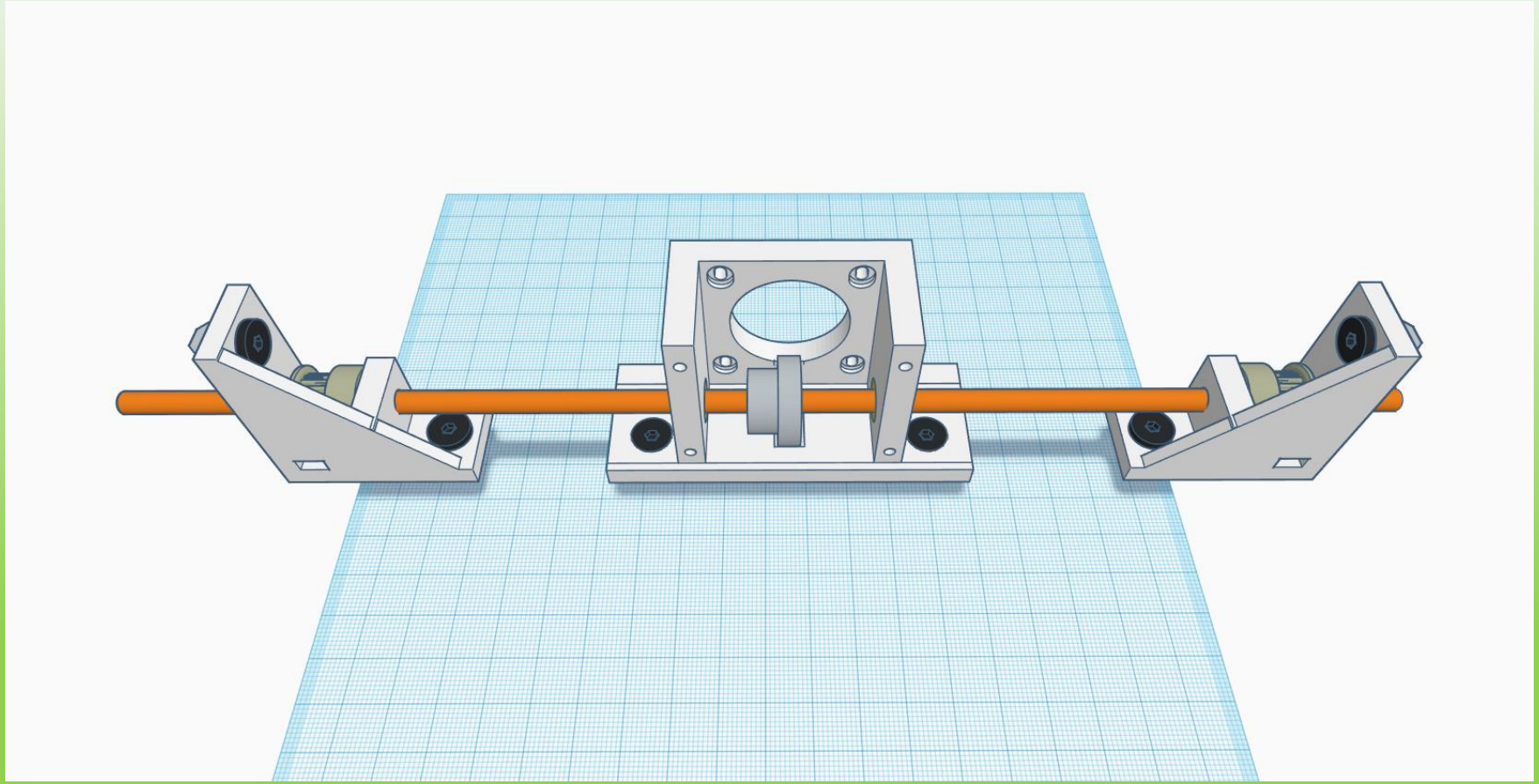

Slice at each side of the Z-drive axle a prepared Z-drive pulley over the axle.
Perform this step 2 x one for the front and the rear.

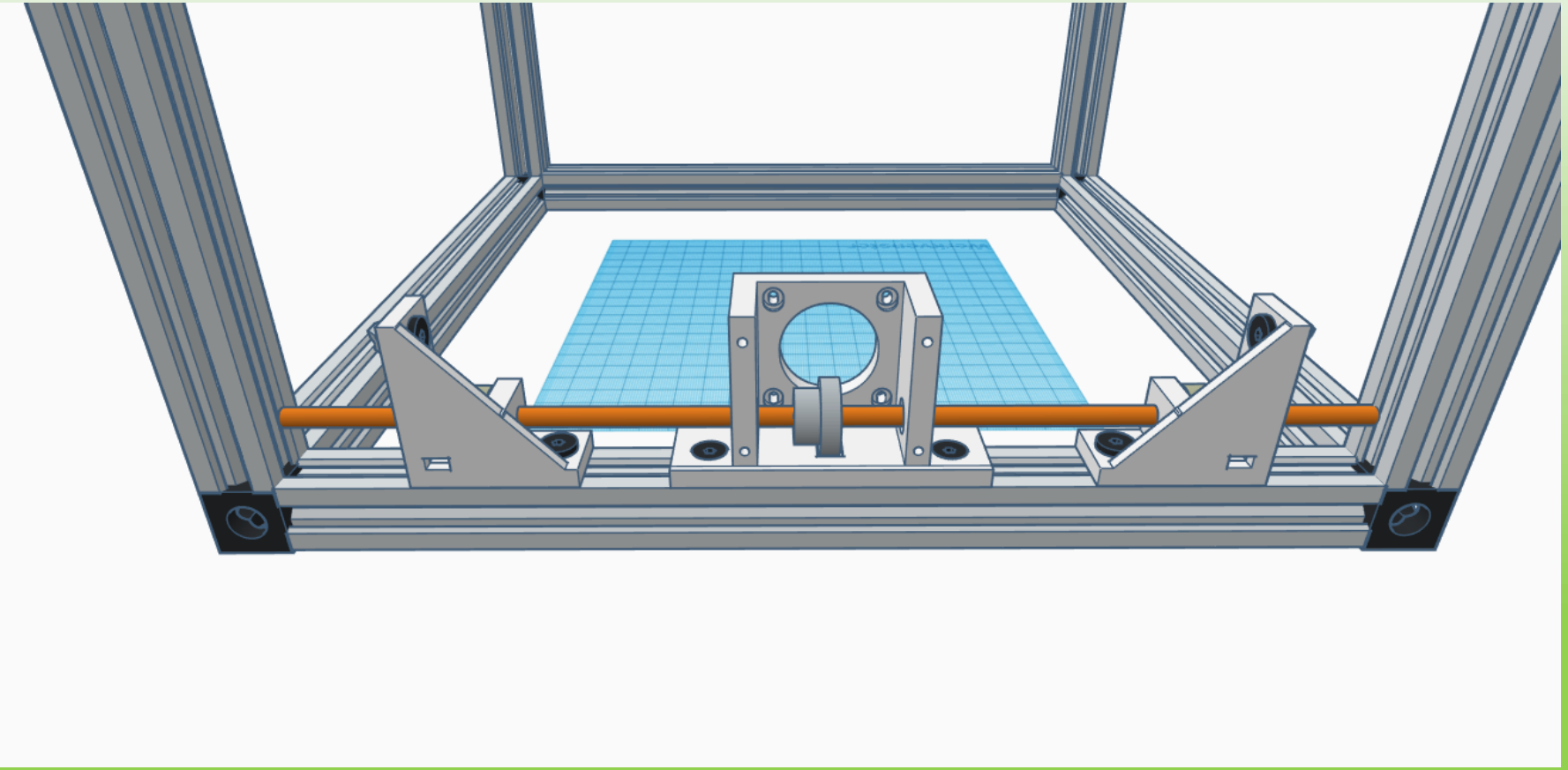

Place the whole Z – drive section on the front X- bottom V-slot prolife.
Center the Z-drive motor bracket and secure the M5 x 8 mm countersunk flathead hexagon screws

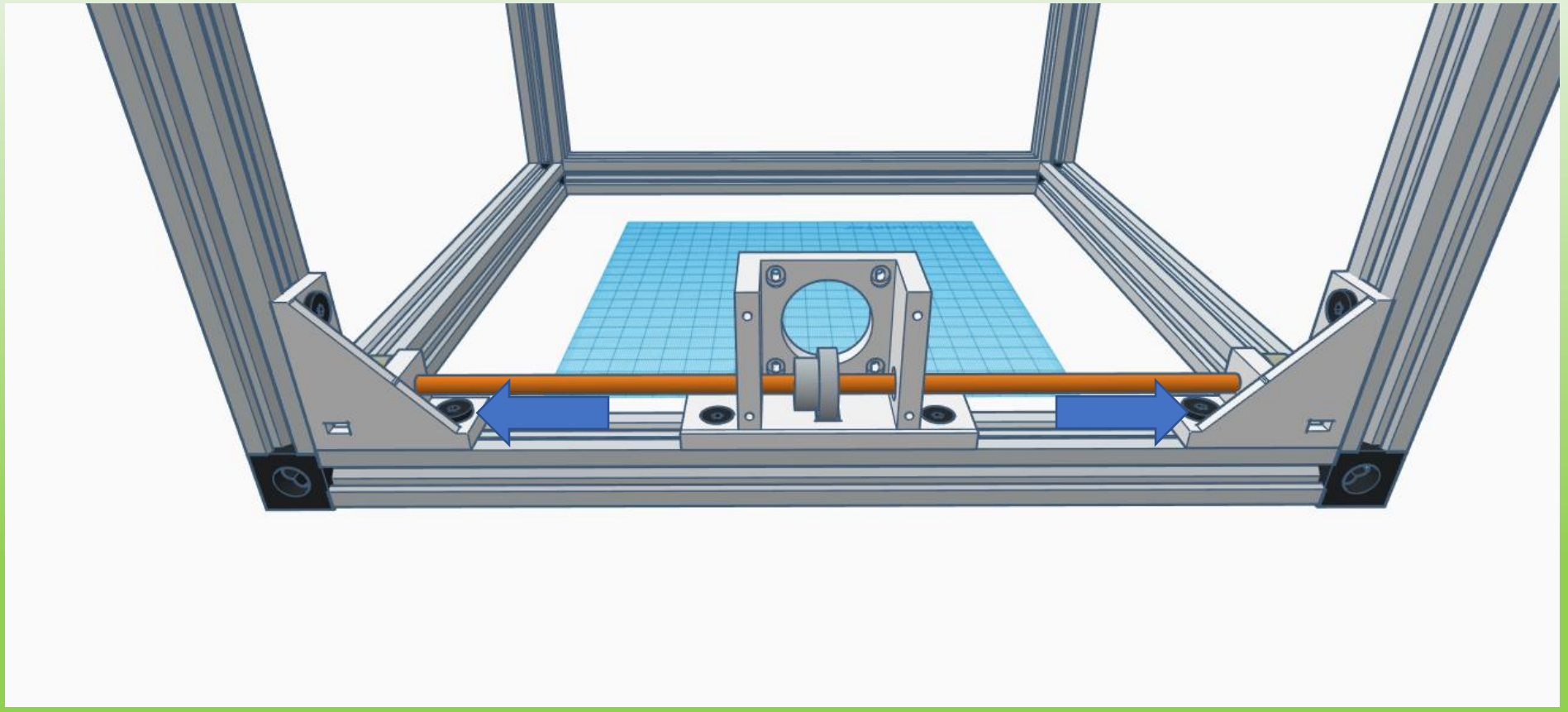

Slide each Z-drive pulley bracket to the corner.
secure the M5 x 8 mm countersunk flathead hexagon screws

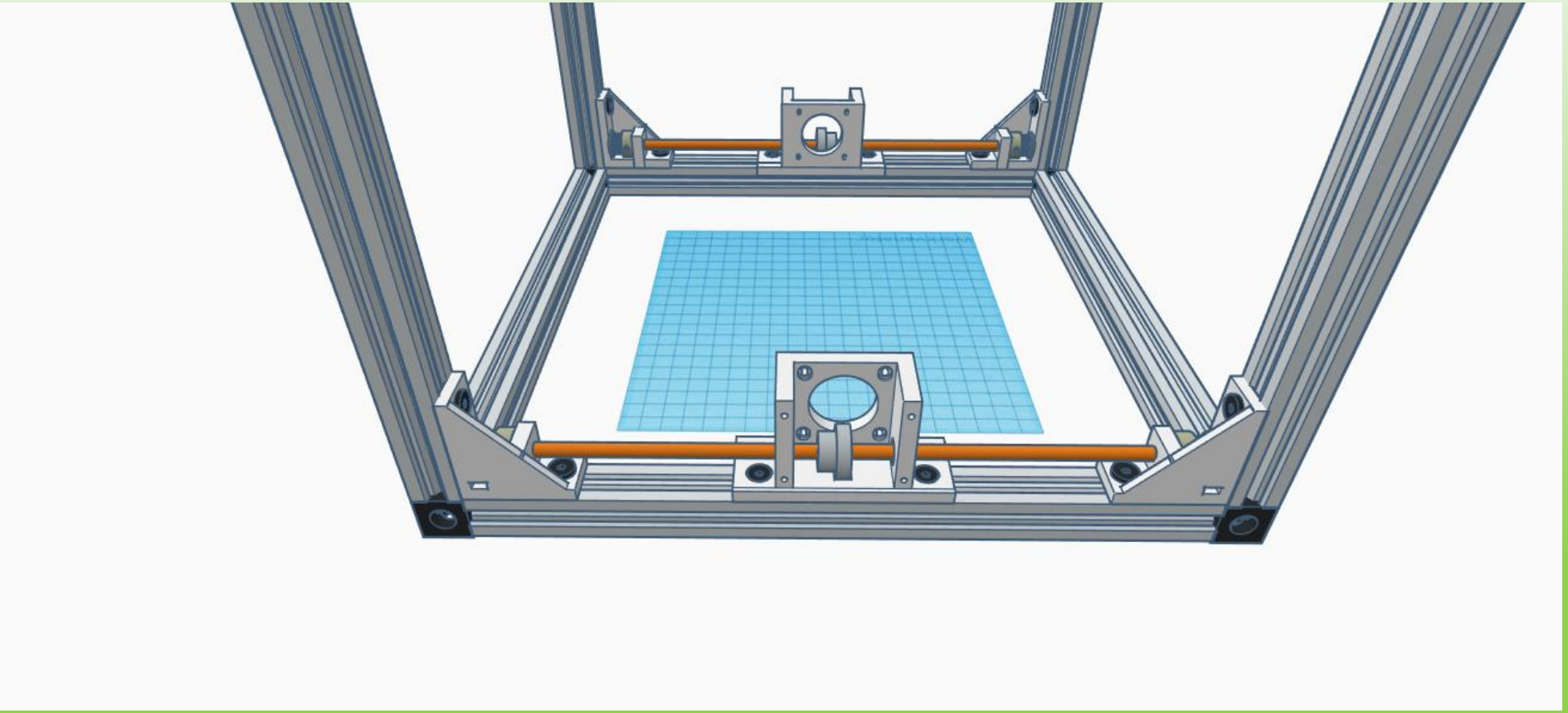

Perform the same steps for the rear.

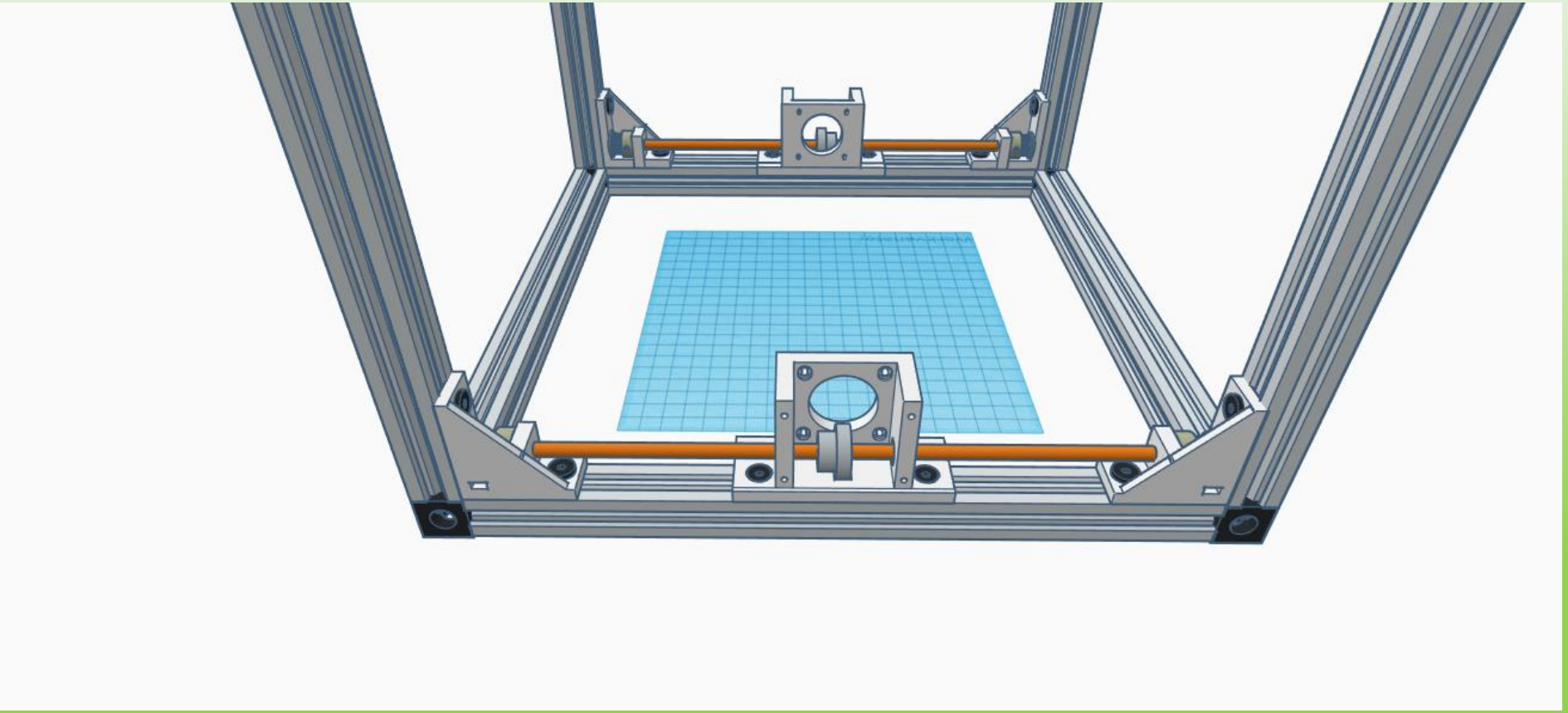

Perform the same steps for the rear.

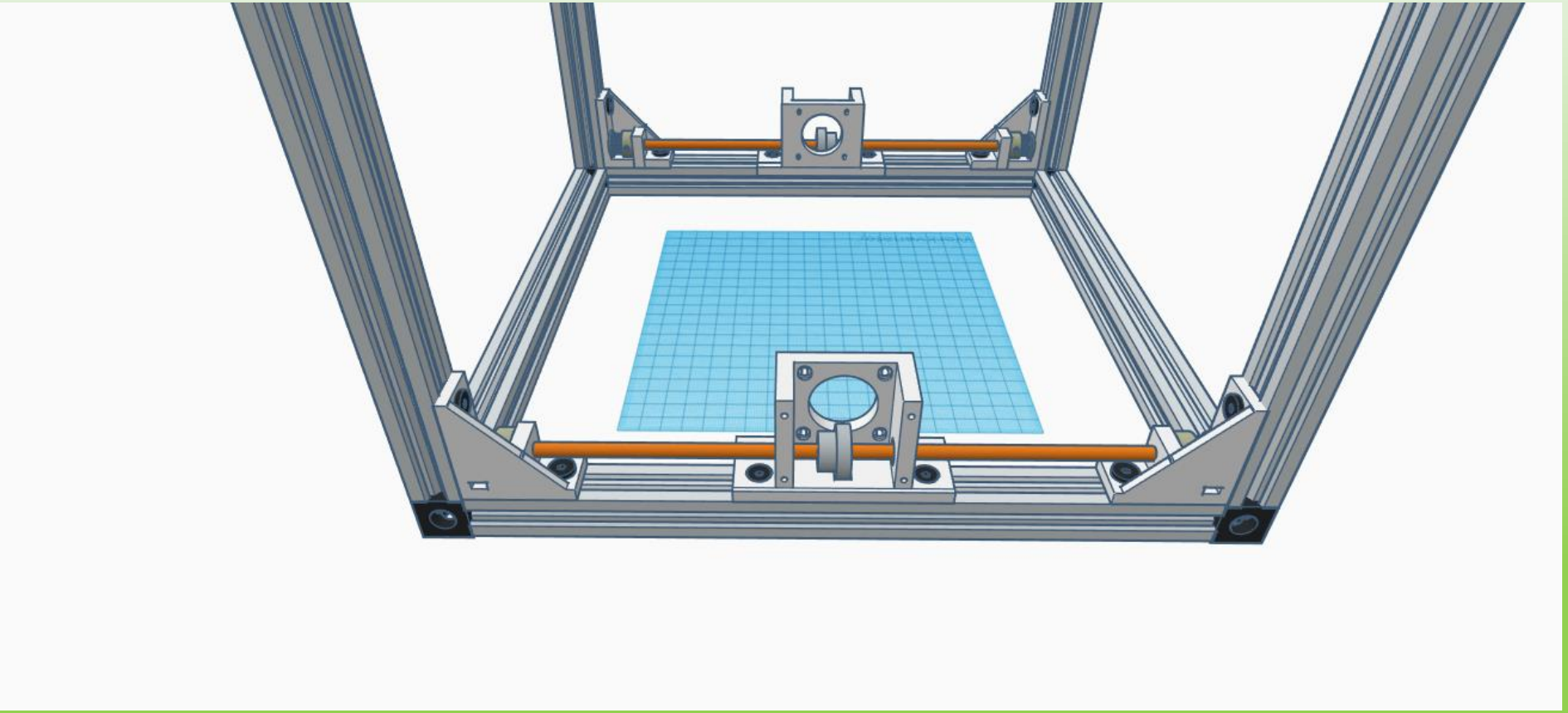

Perform the same steps for the rear.

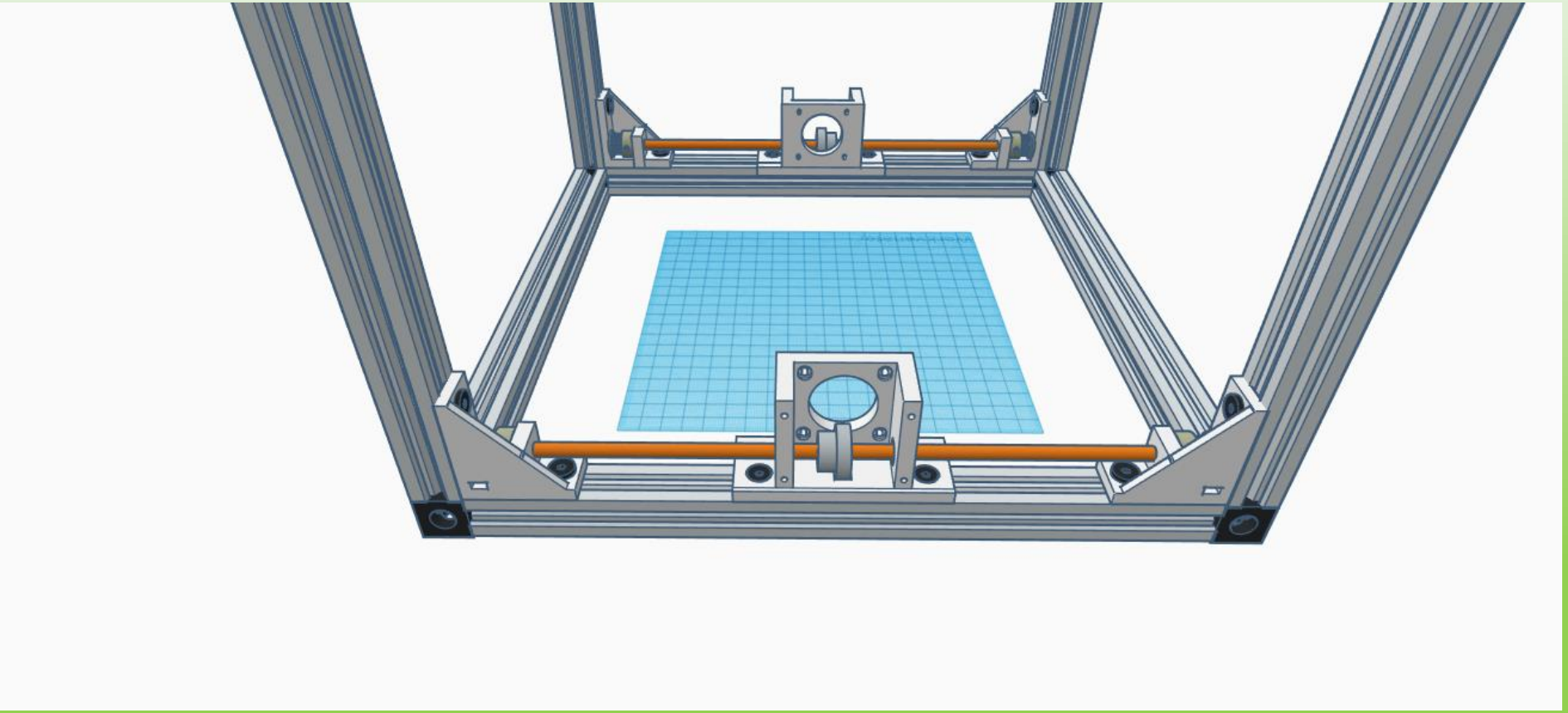

Perform the same steps for the rear.

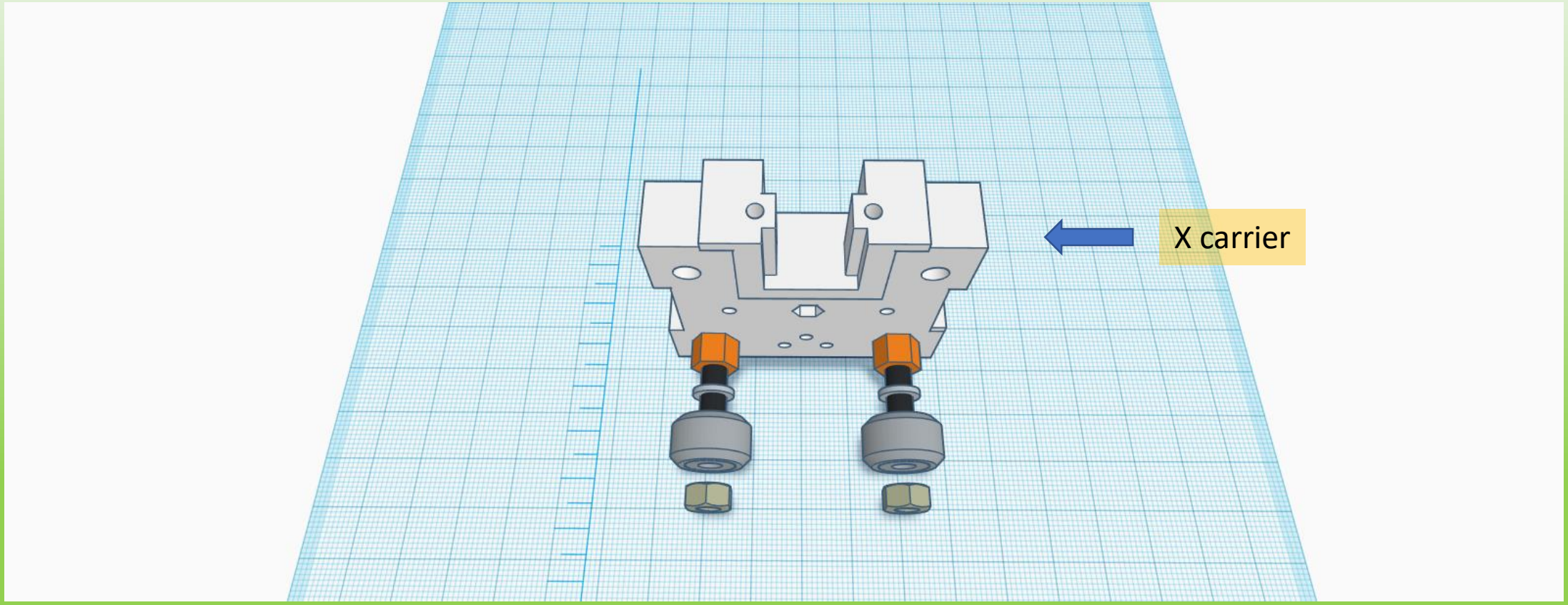

Press fit the excenter bushing first in the X carrier bracket.
Then slide the M5 x 30 mm flathead hexagon screw through the excenter bushing.
Fit the 5 x 8 x 1 mm shimwasher wheel and nut.
Thighten the M5 x 30 mm flathead hexagon screw and M5 nut untill all play is gone but the wheel still runs free.

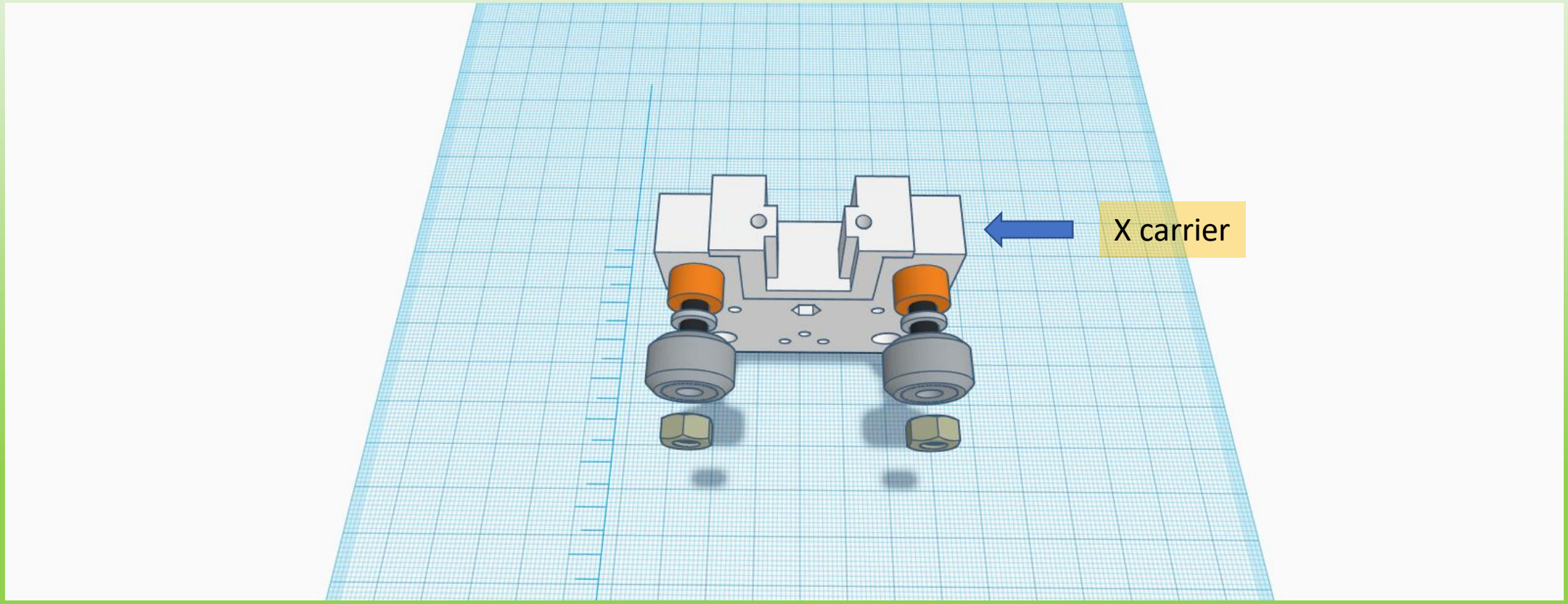

Then slide the M5 x 30 mm flathead hexagon screw through the bushing.
Fit the 5 x 8 x 1 mm shimwasher wheel and nut.
Thighten the M5 x 30 mm flathead hexagon screw and M5 nut untill all play is gone but the wheel still runs free.

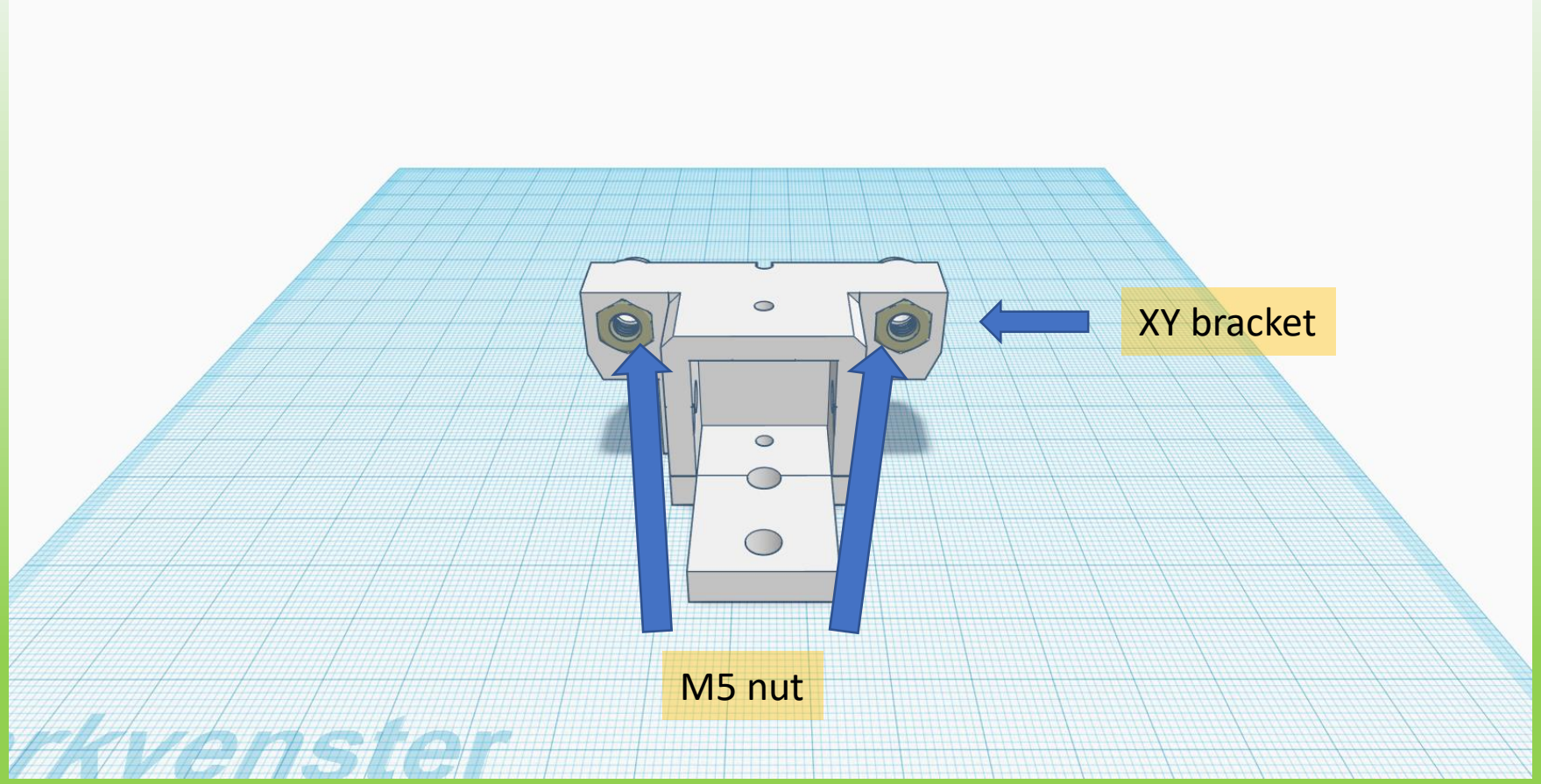

Fit 2x the M5 nut first in the XY lower bracket.

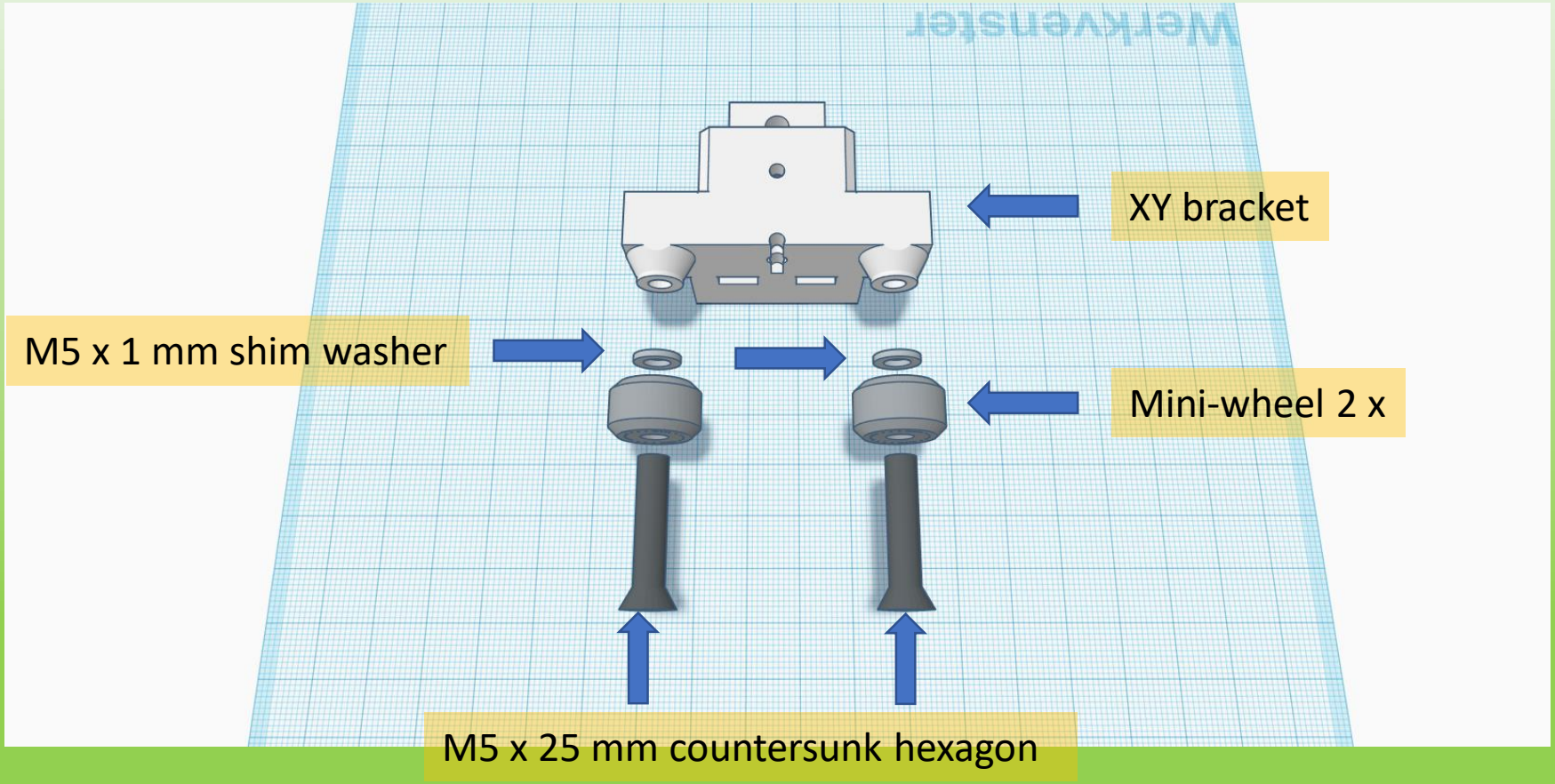

Fit the M5 x 1 mm shimwasher, mini-wheel and M5 x 25 mm countersunk hexagon screw.
Thighten the M5 x 25 mm countersunk hexagon screw and M5 nut untill all play is gone.
The mini-wheels still should run free.

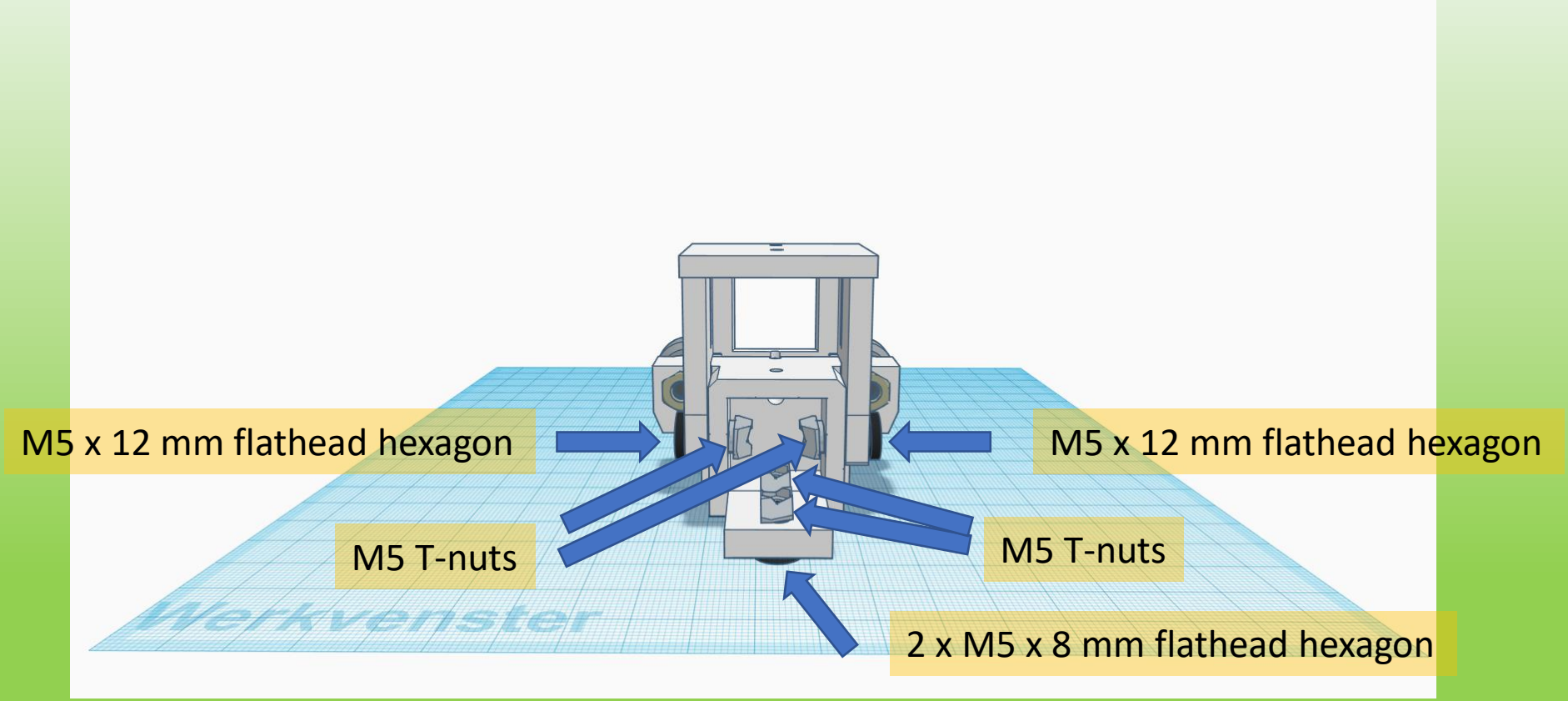

Place the XY upper bracket and secure it with M5 x 12 mm flathead hexagon screws and M5 T-nuts.
Just loosely fit as we have to tighten in a later step.
Then fit M5 x 8 mm flathead hexagon screws and M5 T-nuts in the XY bottom part.
Just loosely fit as we have to tighten in a later step.

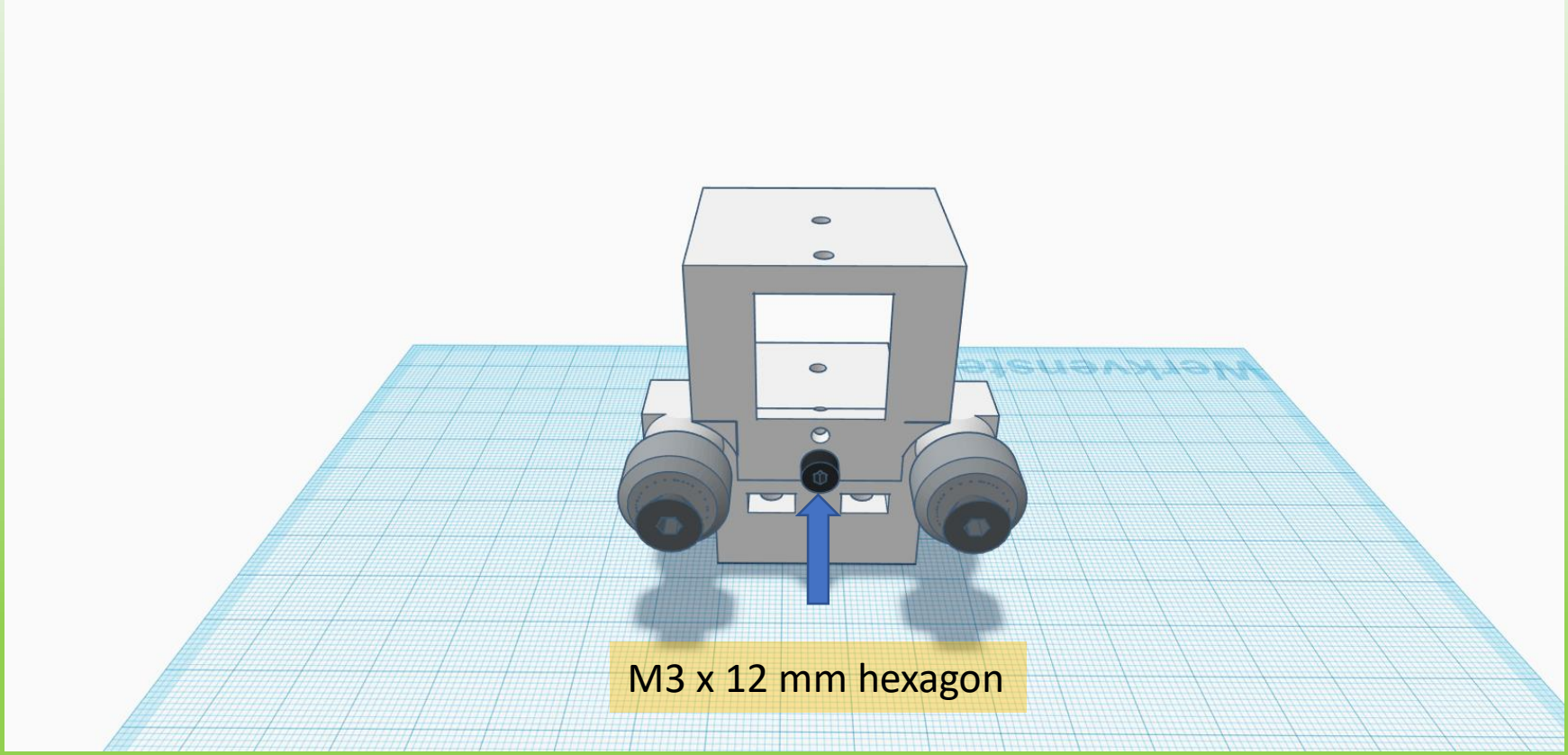

Fit a M3 x 12 mm hexagon screw.

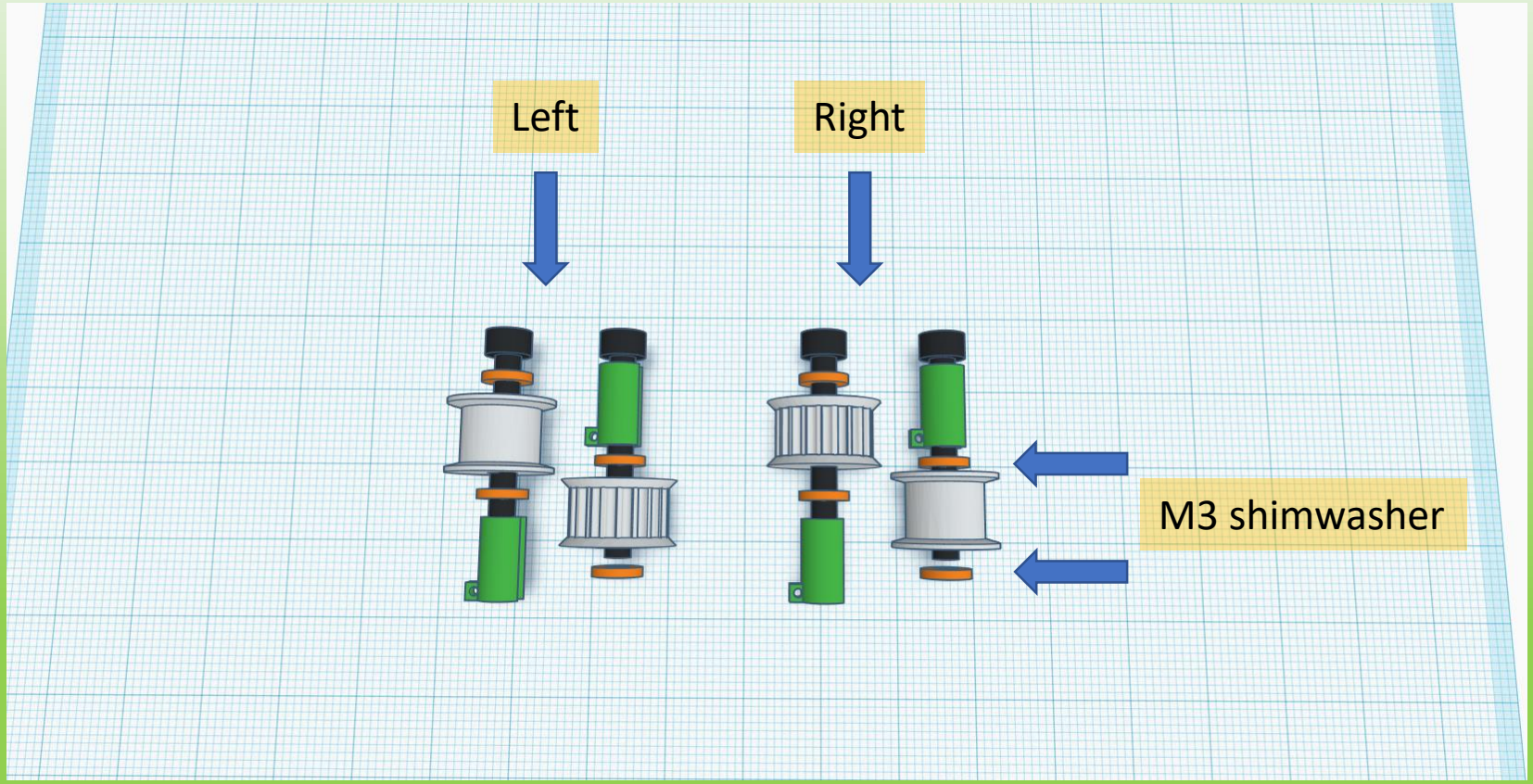

This is the assembly order for the XY idlers. Left and rigth seen from the front of the printer.
Fit these parts in the coresponding XY left and right upper bracket.

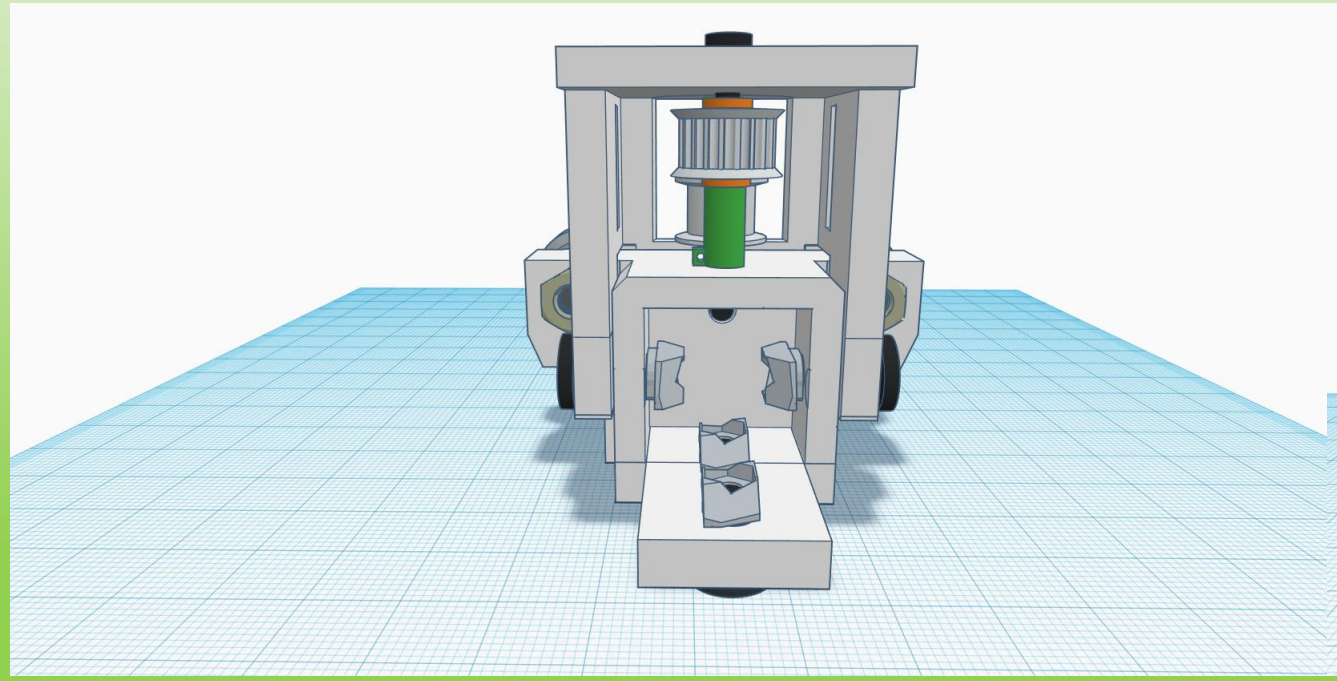

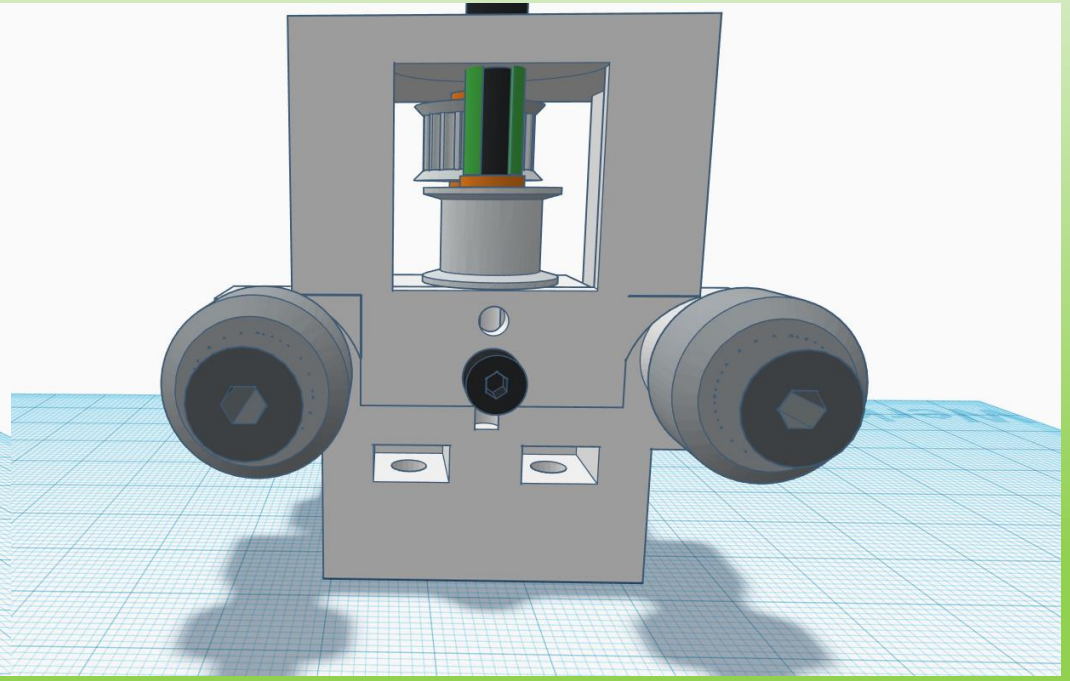

Right hand side XY bracket with idlers installed.

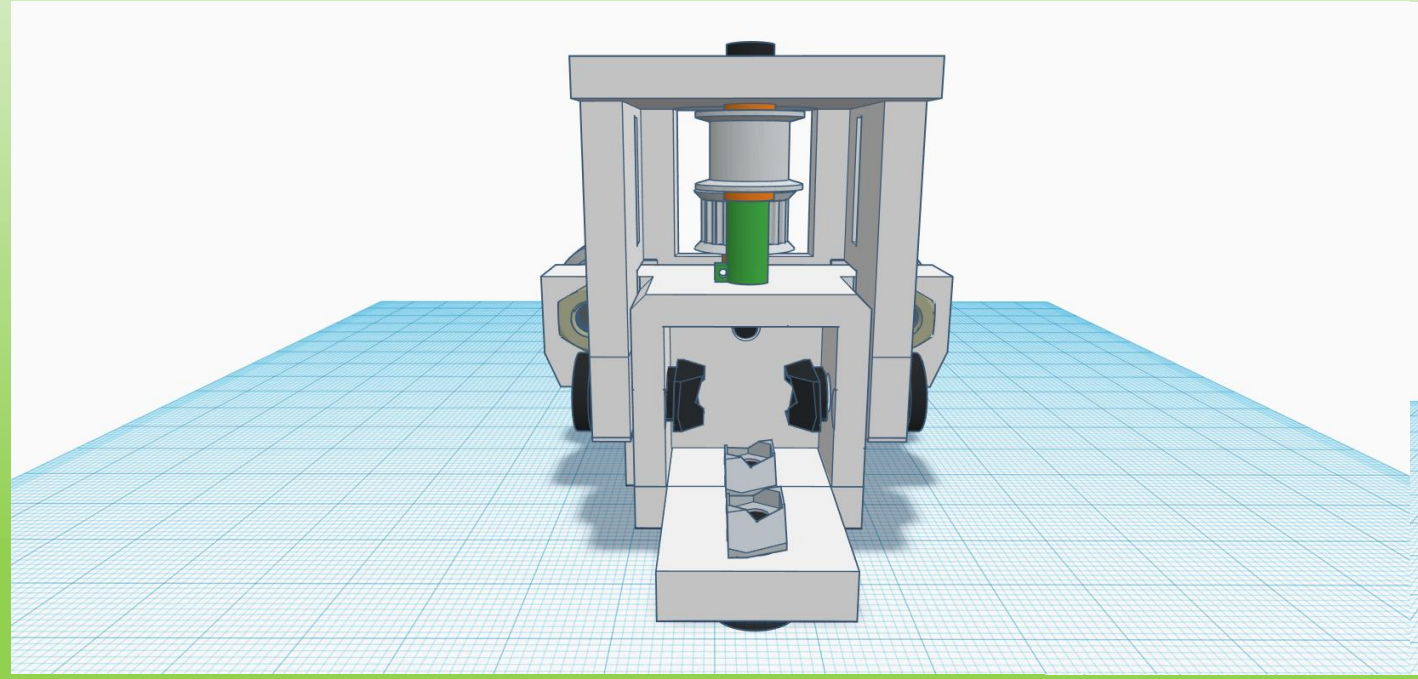

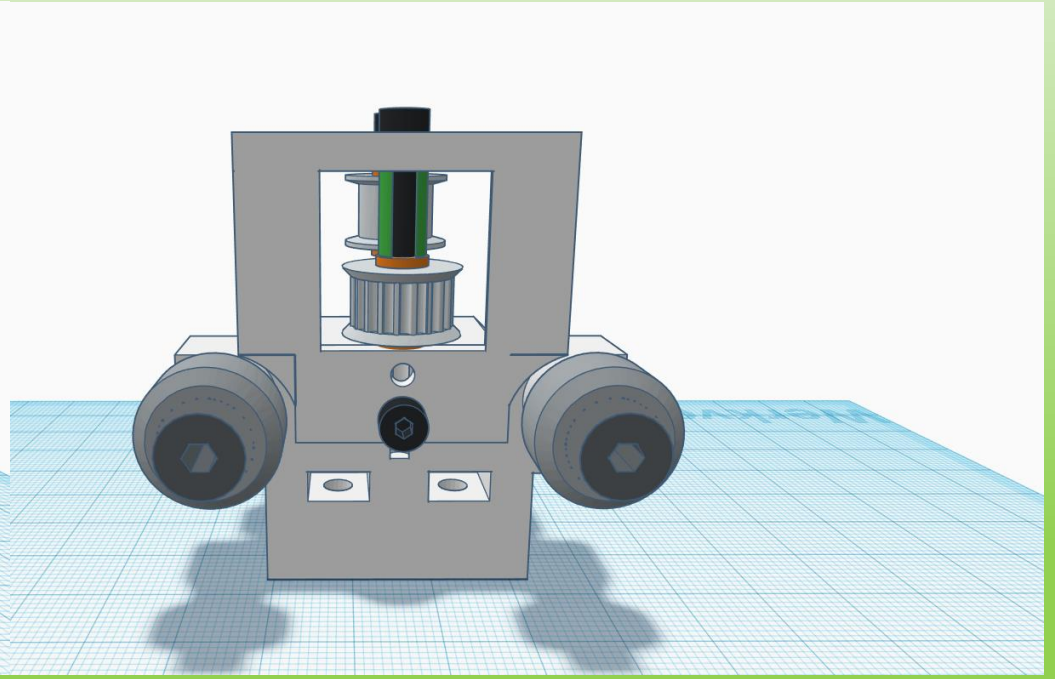

Left hande side XY bracket with idlers installed.

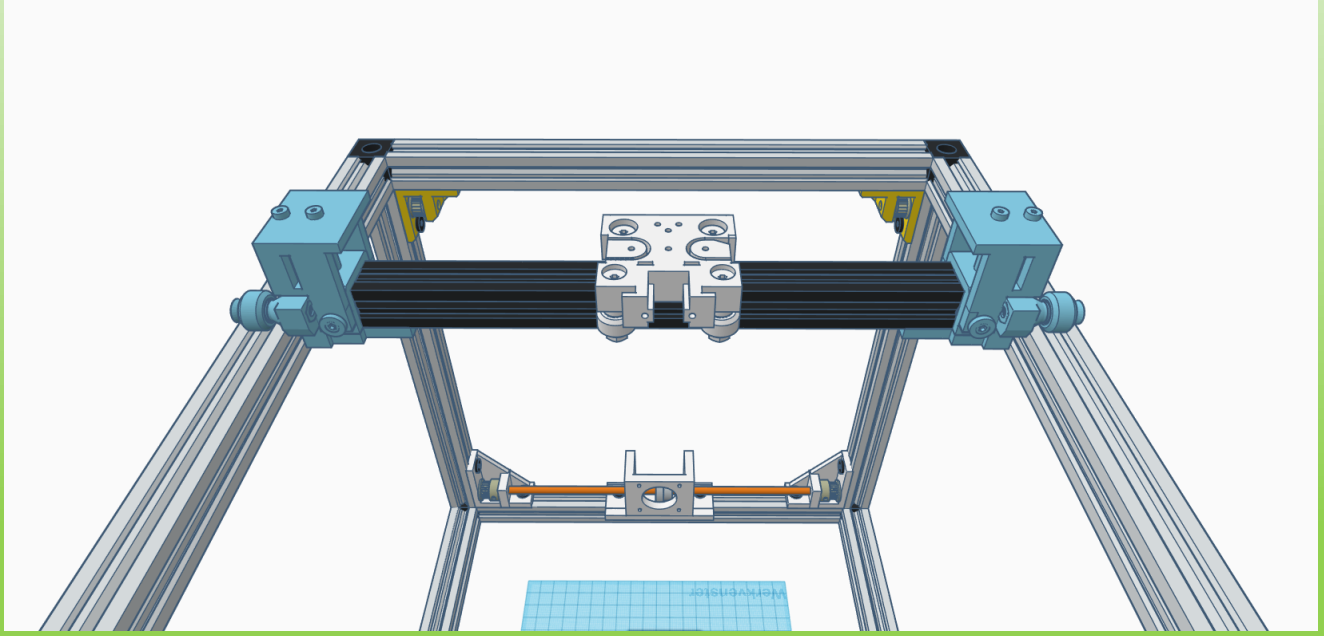

Slide de X carriage on the X V-profile.

Fit the left and right XY bracket at each end of the X V-profile.

Align the wheels in the V-slot left and right.

Thighten the M5 screws in the XY brackets so the parts are just a little tight.

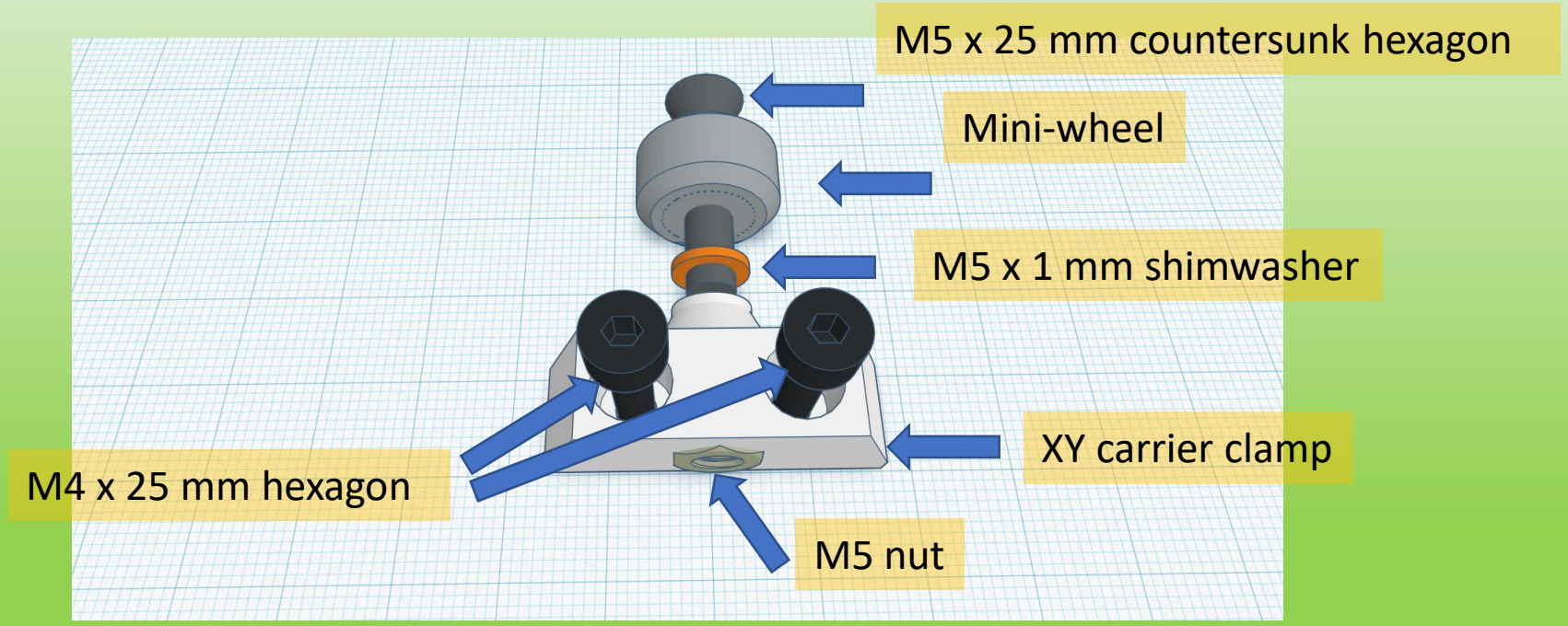

Fit the M5 nut.
Fit the M5 x 1 mm shimwasher, mini-wheel and M5 x 25 mm countersunk hexagon screw.
Thighten the M5 x 25 mm countersunk hexagon screw and M5 nut untill all play is gone.
The mini-wheel still need to run free. Fit the M4 x 25 mm hexagon screws.
Perform these step 2x for left and right.

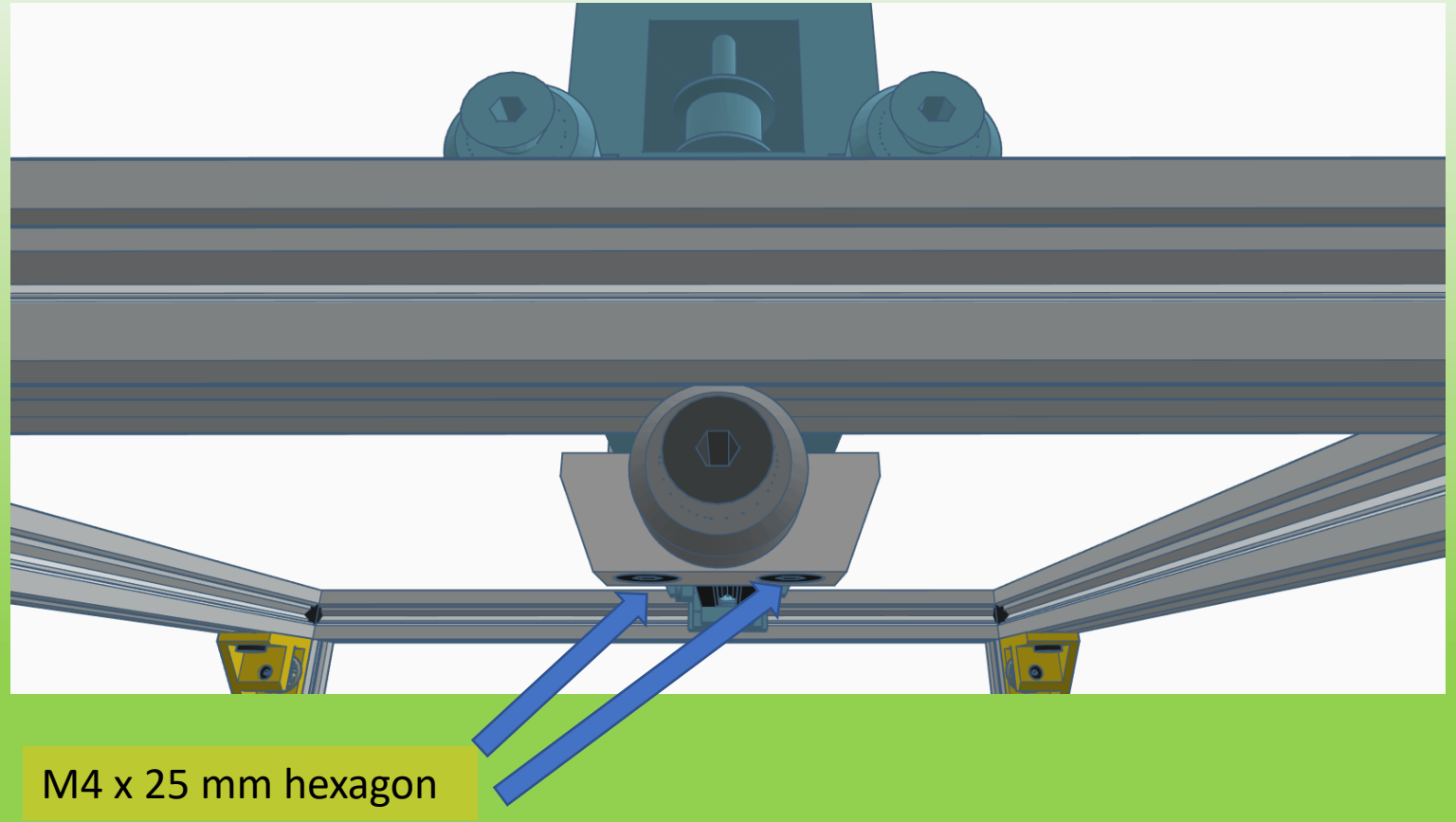

Fit the XY carrier clamp by tightening the M4 x 25 hexagon screws.
Make sure all play is gone in the XY carrier.
Perorm the same step for the left hand side XY carrier.
Now tighten up all M5 screws in the XY carriers.
Check for free motion of the whole X carrier over the whole travel.

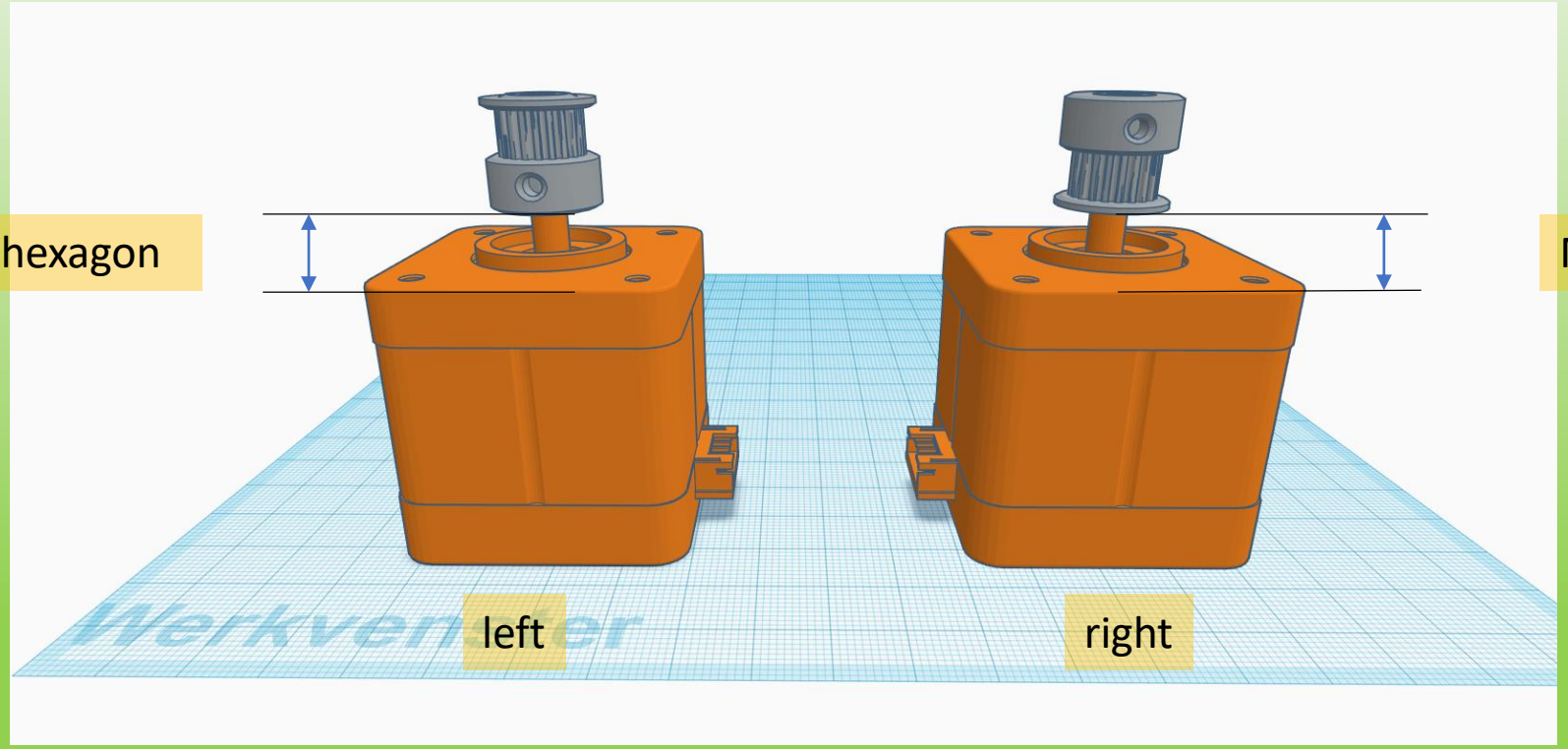

Fit on each motor a GT-2 20T drive pulley at the marked distance.
Take notice of the position of the motors.

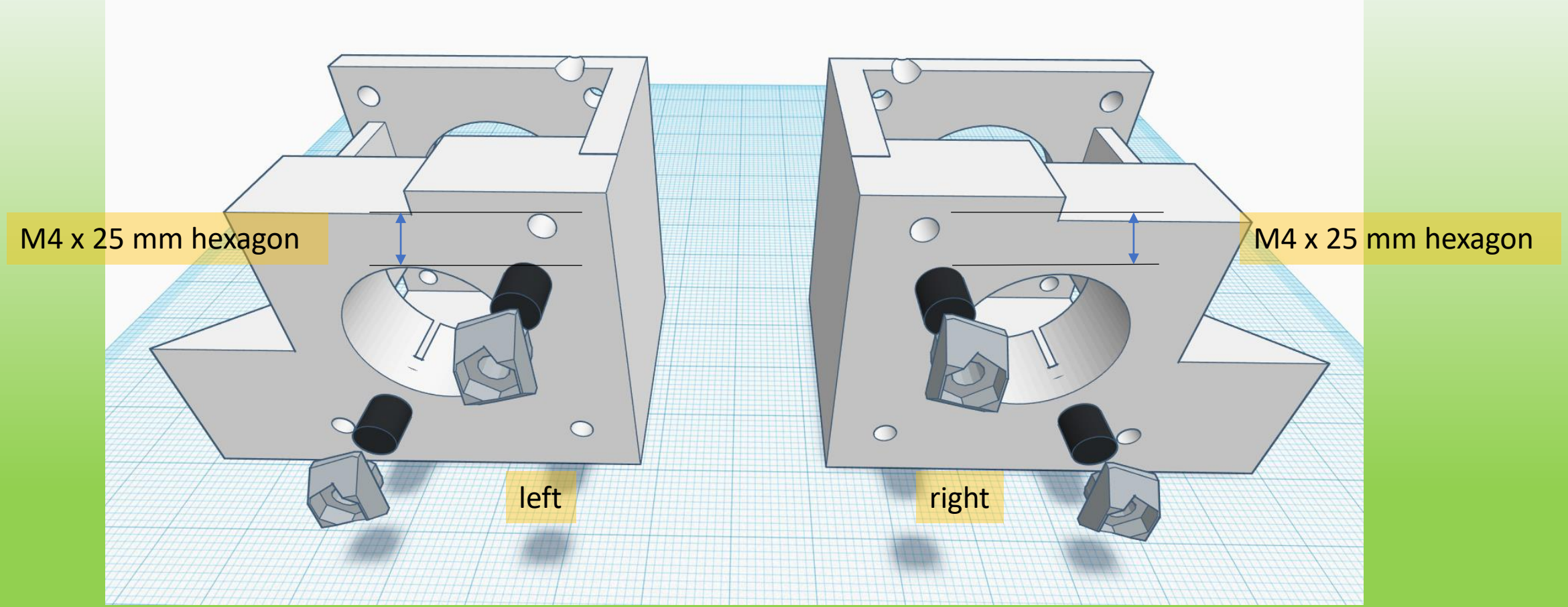

Fit on each motor a GT-2 20T drive pulley at the marked distance.
Take notice of the position of the motors.

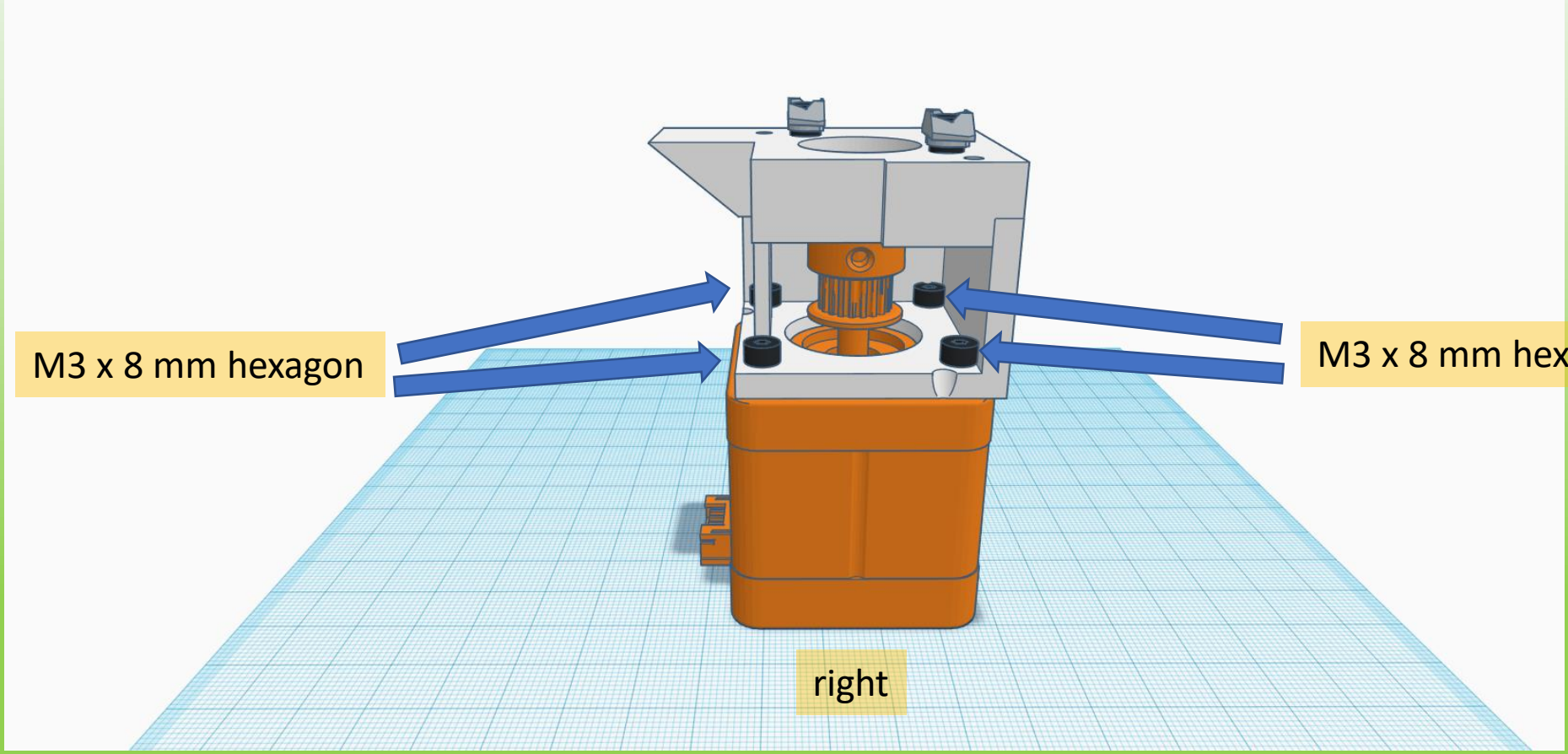

Fit the motor on the XY motor corner bracket with M3 x 8 mm hexagon screws.

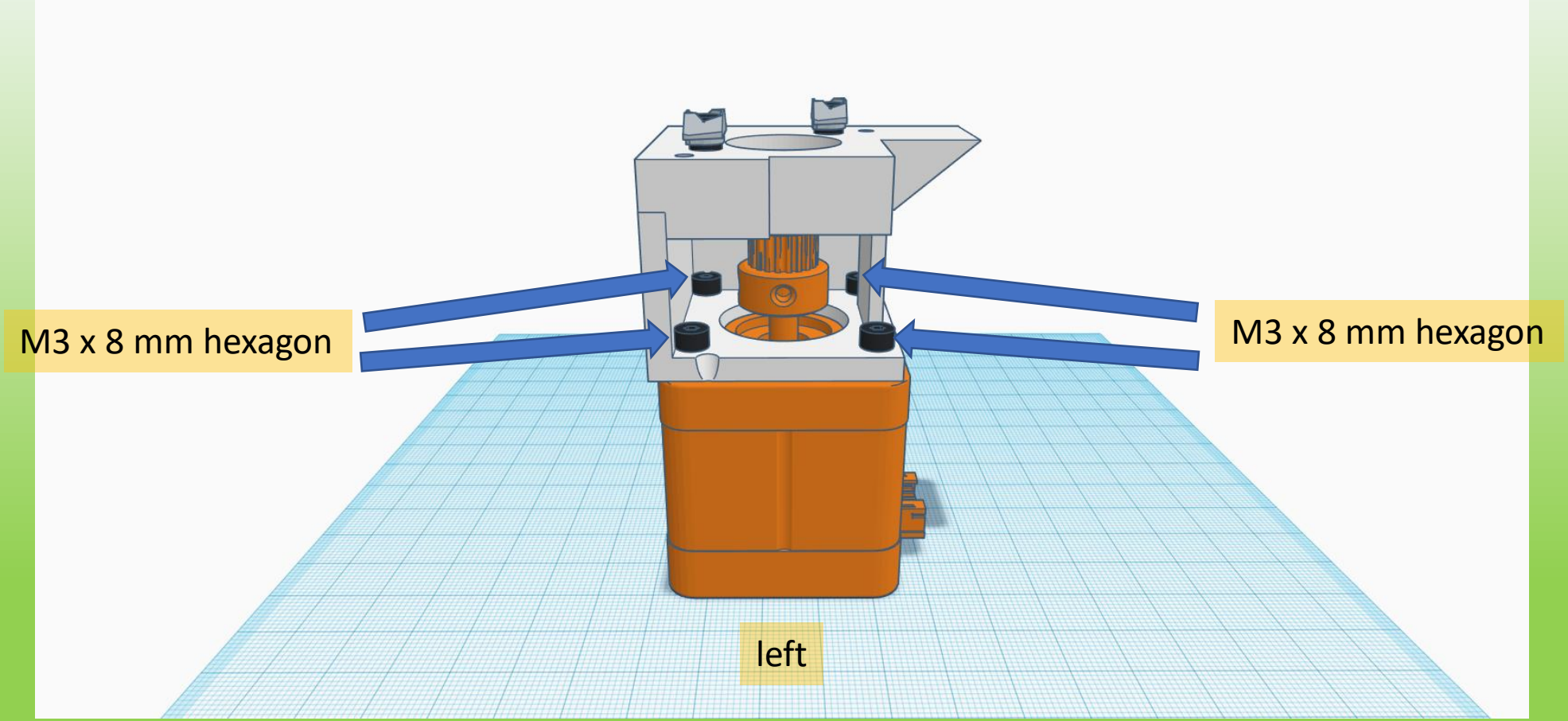

Fit the motor on the XY motor corner bracket with M3 x 8 mm hexagon screws.

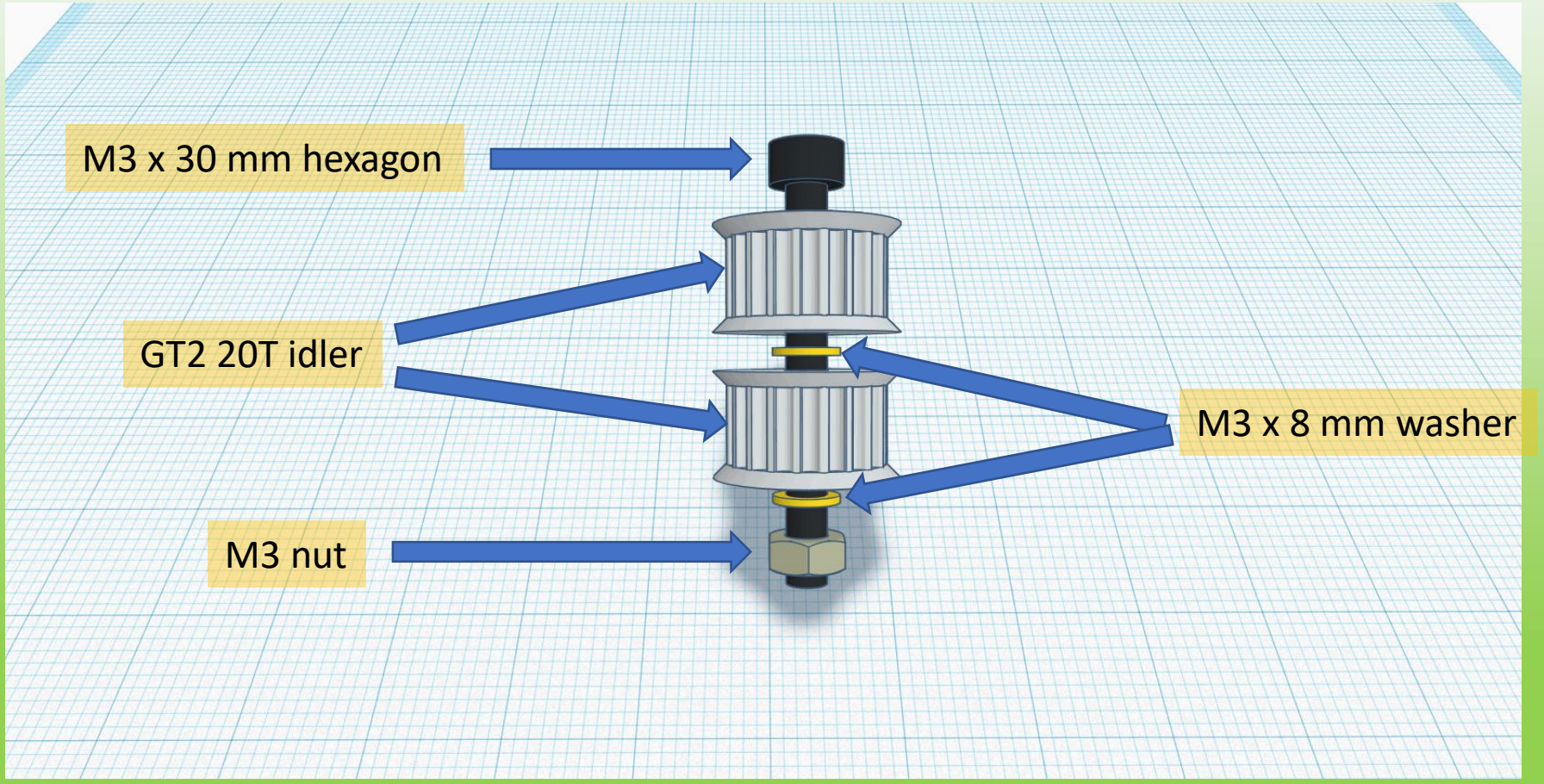

Prepare for left and right hand side these parts.
They should be fitted in the order from bottom to top in the XY idler corner bracket.

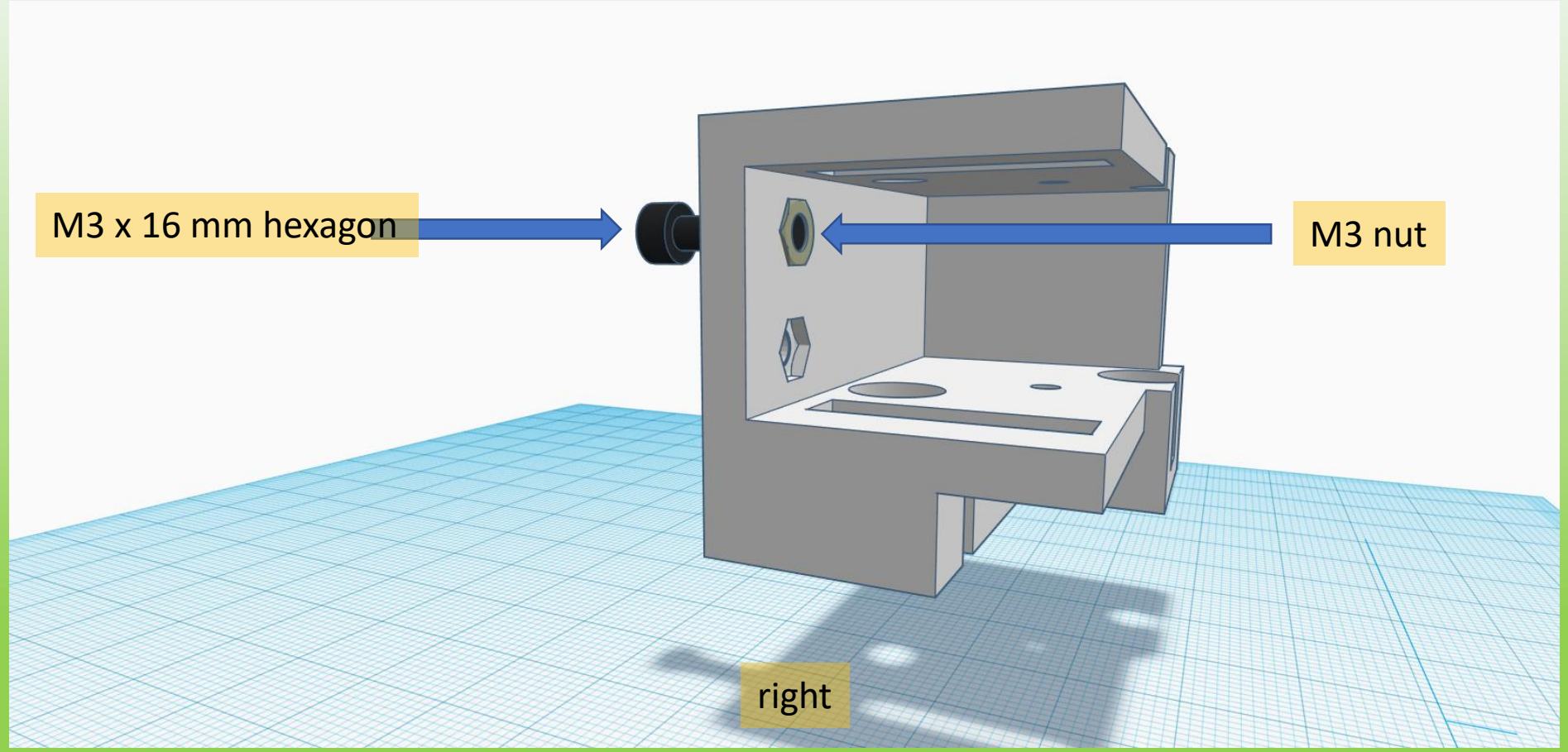

Fit the M3 nut and M3 x 16 mm hexagon screw in the upper position of the right XY idler corner bracket.

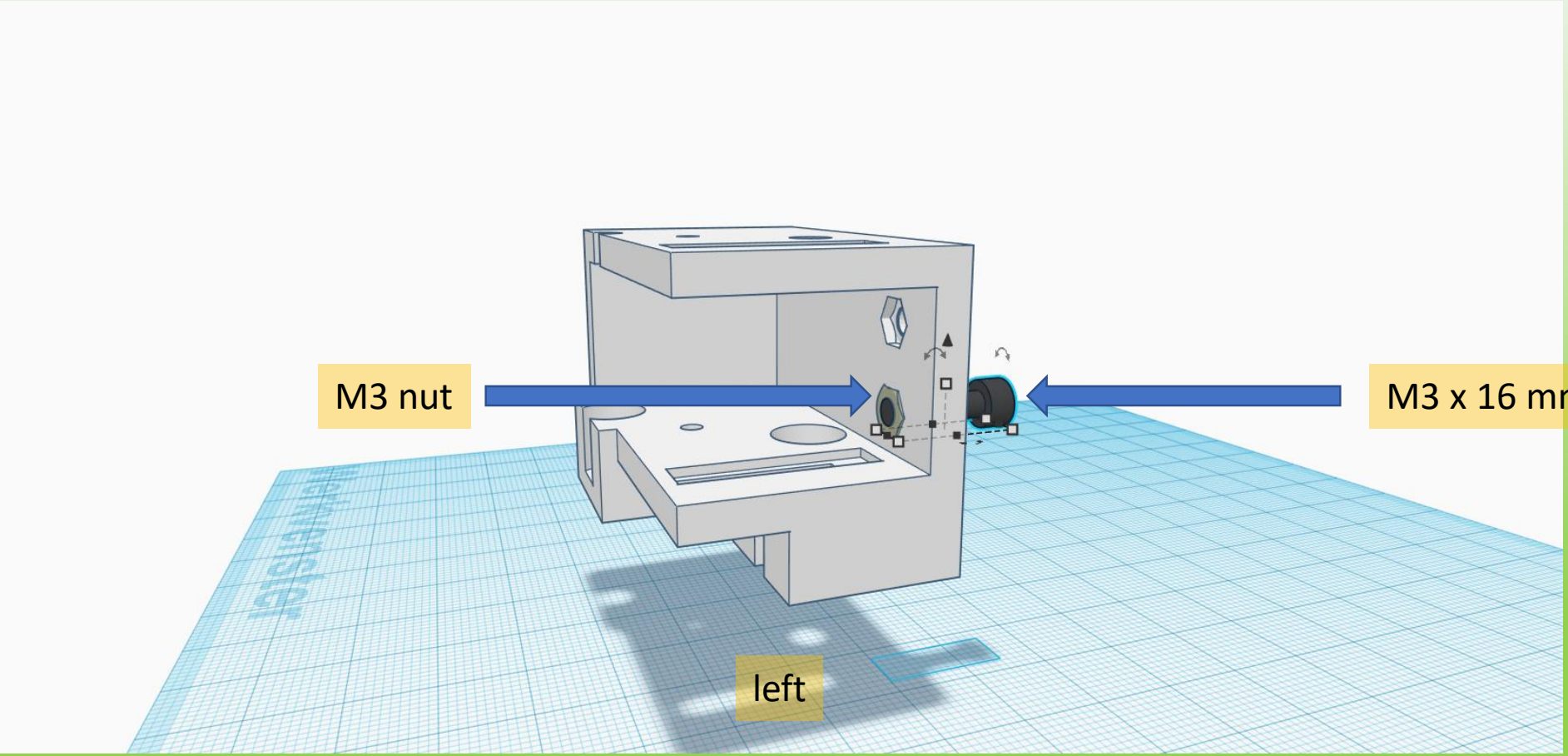

Fit the M3 nut and M3 x 16 mm hexagon screw in the lower position of the left XY idler corner bracket.

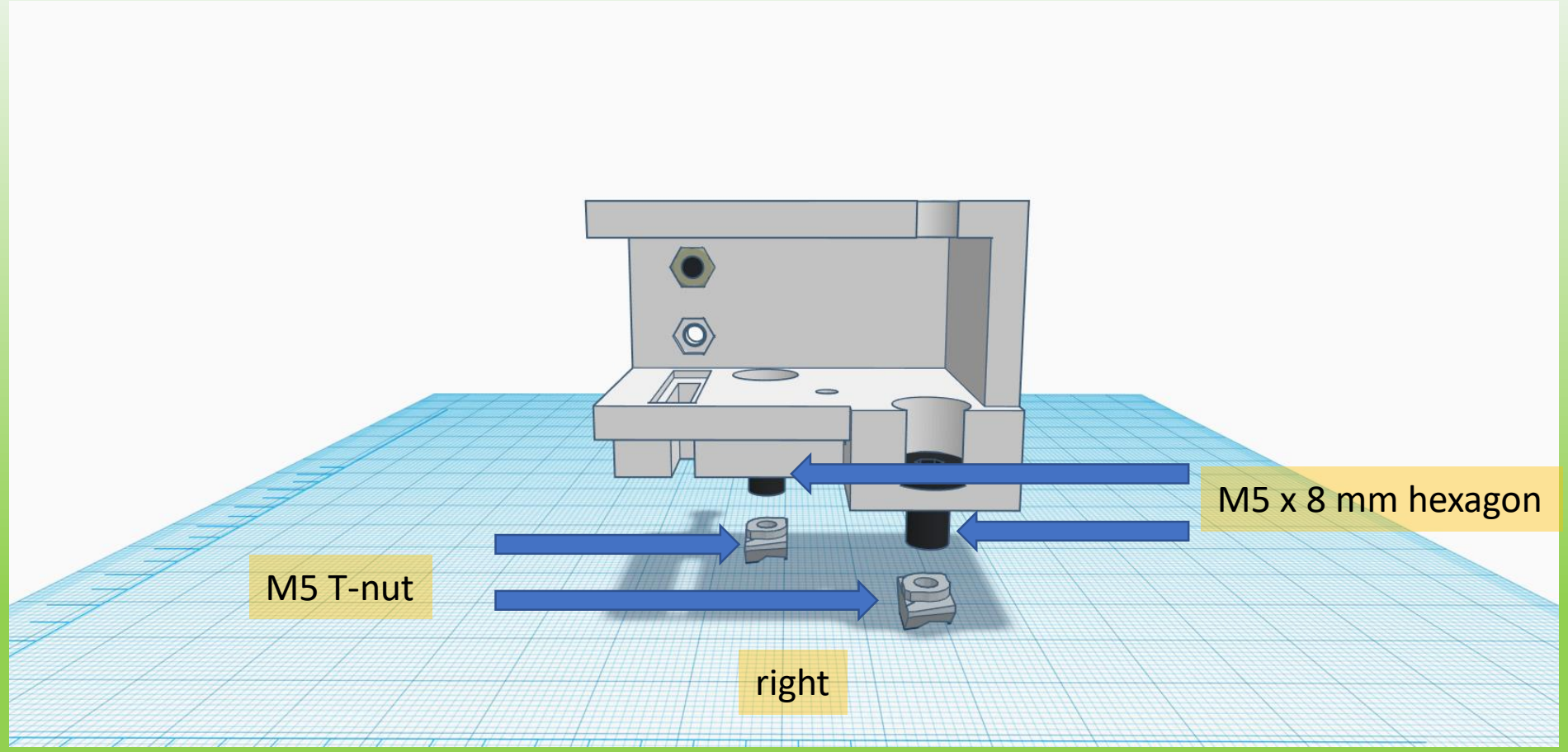

Fit the M5 T-nuts and M5 x 8 mm hexagon screw in the right XY idler corner bracket.

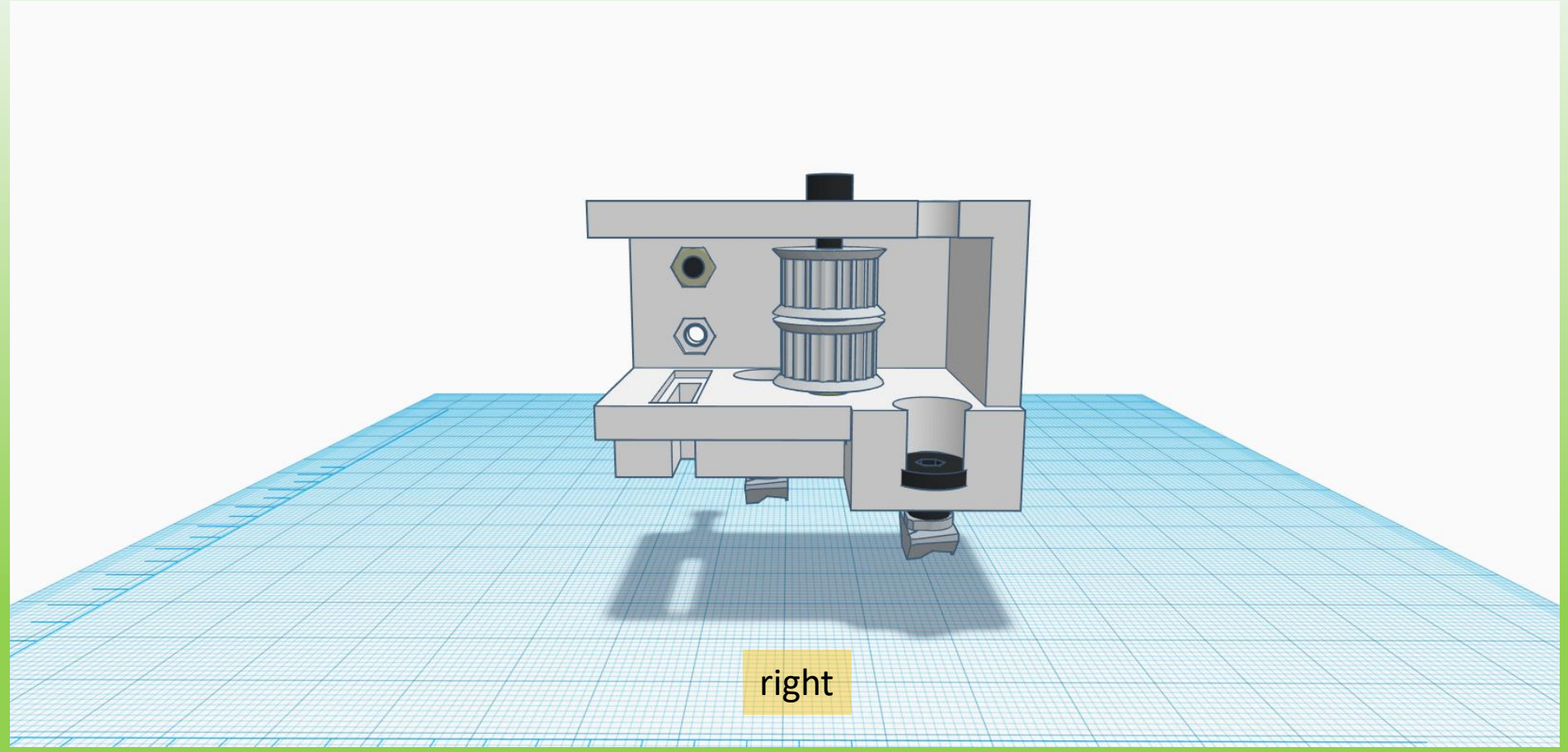

Fit the prepared idler parts from step 30.

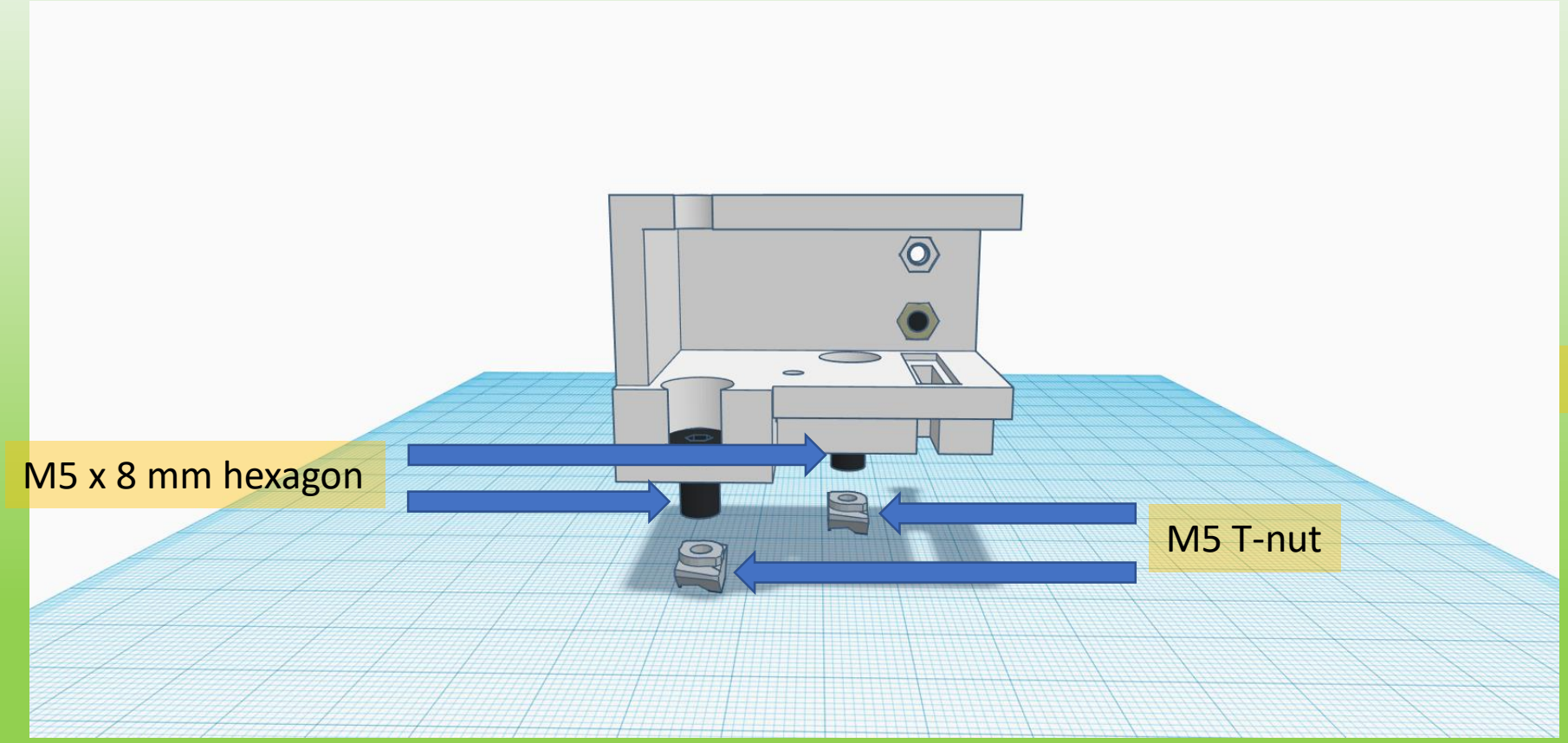

Fit the M5 T-nuts and M5 x 8 mm hexagon screw in the left XY idler corner bracket.

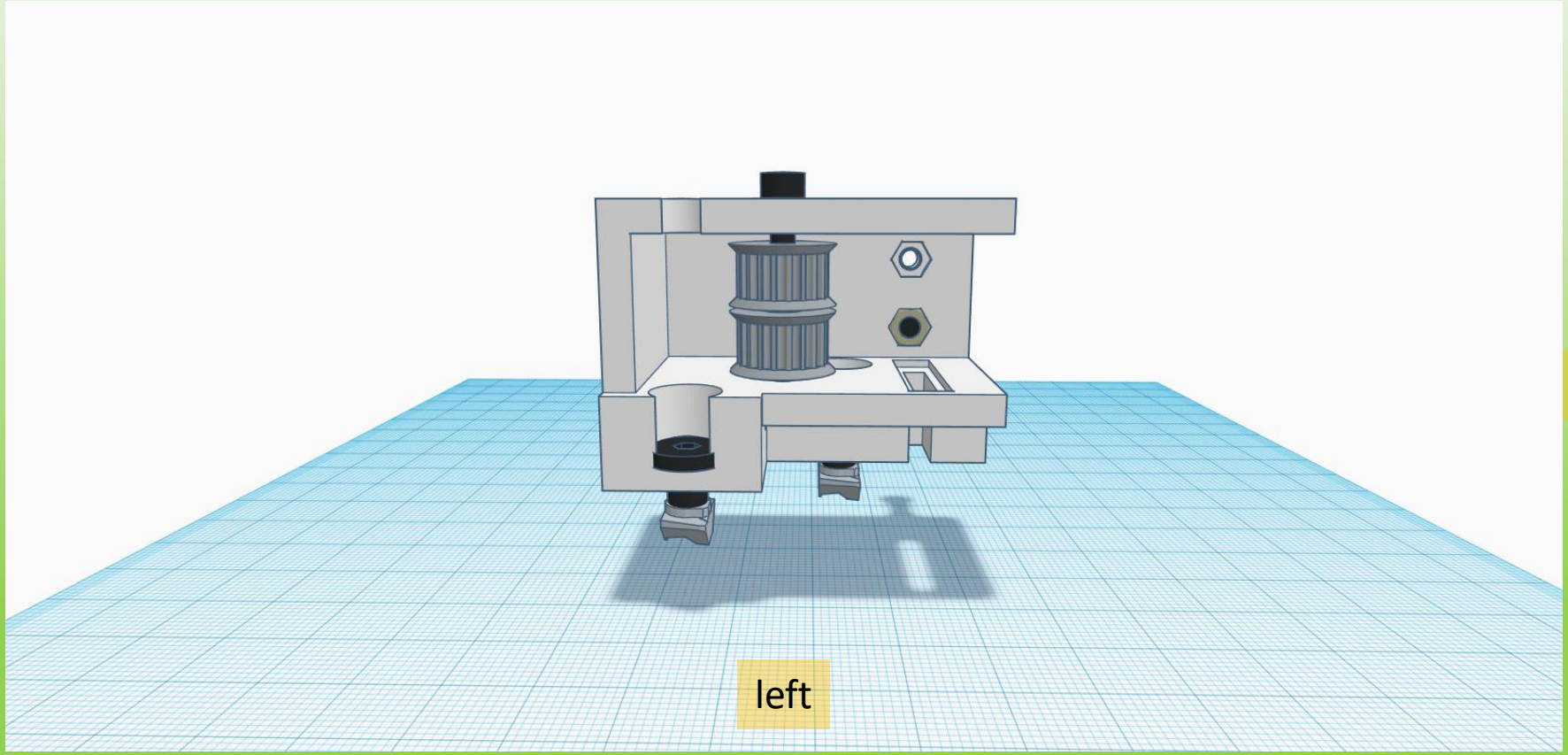

Fit the prepared idler parts from step 30.