ISD ChipCorder®
ISD2360
DataSheet

The information described in this document is the exclusive intellectual property of Nuvoton Technology Corporation and shall not be reproduced without permission from Nuvoton.

Nuvoton is providing this document only for reference purposes of Audio Product Line based system design. Nuvoton assumes no responsibility for errors or omissions.

All data and specifications are subject to change without notice.

For additional information or questions, please contact: Nuvoton Technology Corporation.

www.nuvoton.com

TABLE OF CONTENTS

TABLE OF CONTENTS 2
1 FEATURE 3
2 GENERAL DESCRIPTION 5
3 PART INFORMATION 6
4 BLOCK DIAGRAM 9
5 ELECTRICAL CHARACTERISTICS 10
5.1 Absolute Maximum Ratings 10
5.2 Operating Conditions 10
5.3 AC Parameters 10
5.4 DC Parameters 11
5.5 SPI Timing 12
6 FUNCTIONAL DESCRIPTION (BASIC) 13
6.1 Voice Prompt 13
6.2 Voice Macro 13
6.3 Operation Mode 13
6.4 Signal Path 13
7 APPLICATION DIAGRAM 14
7.1 SPI Mode Application 14
7.2 Standalone Application 16
8 PACKAGE DIMENSION 17
9 ORDERING INFORMATION 19
10 REVISION HISTORY 20
IMPORTANT NOTICE 21

1 FEATURE

- **Duration**
  - ISD2360 – 64 seconds based on 8kHz/4bit ADPCM in 2Mbit of flash storage (256KB)
- **Audio Management**
  - Store pre-recorded audio (**Voice Prompts**) using high quality digital compression
  - Use simple index-based command for playback – no address needed
  - Execute pre-programmed macro scripts (**Voice Macros**) designed to control the configuration of the device and playback Voice Prompts sequences
- **Path and playback Control**
  - Up to 3 channel audio streaming can be mixed and played back concurrently
  - Each channel has independent counter which enables user micro-management on VM execution
  - Mask Jump allows branch execution depending on internal register or external GPIO pin status
- **Control**
  - Serial SPI interface for microprocessor control and programming
  - Stand-alone control where customized Voice Macro scripts are assigned to GPIO trigger pins
- **Sample Rate**
  - 7 sampling frequencies 4, 5.3, 6.4, 8, 12.8, 16 and 32 kHz are available
  - Each Voice Prompt can have optimal sample rate
- **Compression Algorithms**
  - µ-Law: 6, 7 or 8 bits per sample
  - Differential µ-Law: 6, 7 or 8 bits per sample
  - PCM: 8, 10 or 12 bits per sample
  - Enhanced ADPCM: 2, 3, 4 or 5 bits per sample
  - Variable-bit-rate optimized compression. This allows best possible compression given a metric of SNR and background noise levels
- **Oscillator**
  - Internal oscillator with internal reference: factory trimmed to ±1% deviation at room temperature
- **Output**
  - PWM: Class D speaker driver to direct drive an 8Ω speaker or buzzer
  - Delivers:
    - 4Ω load: 400mW @3.3V; 1.1W @5V; 1.3W @5.5V
    - 8Ω load: 330mW @3.3V; 850mW @5V; 1W @5.5V
- **I/Os**
  - SPI interface: MISO, MOSI, SCLK, SSB for commands and digital audio data
  - 6 general purpose I/O (GPIO) pins multiplexed with SPI interface
- **Flash Storage**
  - 2Mbits of storage for combined audio/data
  - Fast programming time (20µs/byte)
  - Erase sector size 1Kbyte, sector erase time 2ms

- Integrated memory checksum calculation for fast verification
- Endurance >100K cycles. Retention > 10 years

- **Operating Voltage**
  - 2.4 ~ 5.5V
- **Package**
  - QFN-32
  - Package is Halogen-free, RoHS-compliant and TSCA-compliant
- **Temperature Options**
  - Industrial: -40°C ~ 85°C

2 GENERAL DESCRIPTION

ISD2360 is a 3-channel digital ChipCorder® providing single-chip storage and playback of high-quality audio. The ISD2360 features digital de-compression, comprehensive memory management, Flash storage, an integrated audio signal path with up to 3 channel concurrent playback and a Class D speaker driver capable of delivering 1 W of power. ISD2360 utilizes flash memory to provide non-volatile audio playback with duration up to 64 seconds (based on 8kHz/4bit ADPCM compression) for a single-chip audio playback solution.

ISD2360 can be controlled and programmed through a Serial Peripheral Interface (SPI) or can operate in standalone mode by triggers applied to the device's six General Purpose Input/Output (GPIO) pins.

ISD2360 requires no external clock sources or components except a speaker to deliver quality audio prompts or sound effects to enhance user interfaces.

In addition, the part can provide non-volatile flash storage in 1Kbyte sectors eliminating the need for additional serial EEPROM/Flash devices. ISD2360 provides wide range of sampling frequencies, high SNR performance, low power consumption, fast programming time and integrated program verification.

ISD2360 is specified for operation from -40℃ ~ +85℃ with QFN-32 package.

3 PART INFORMATION

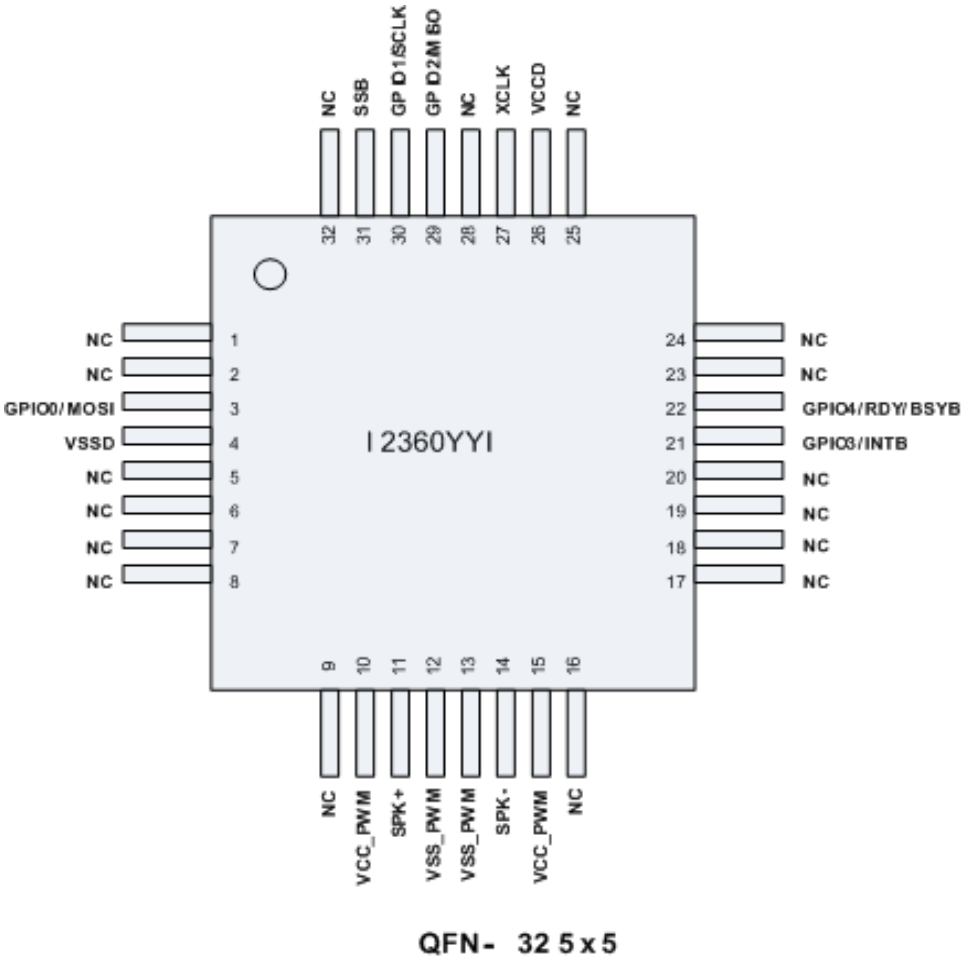

Figure 3-1 ISD2360 32-Lead QFN Pin Configuration

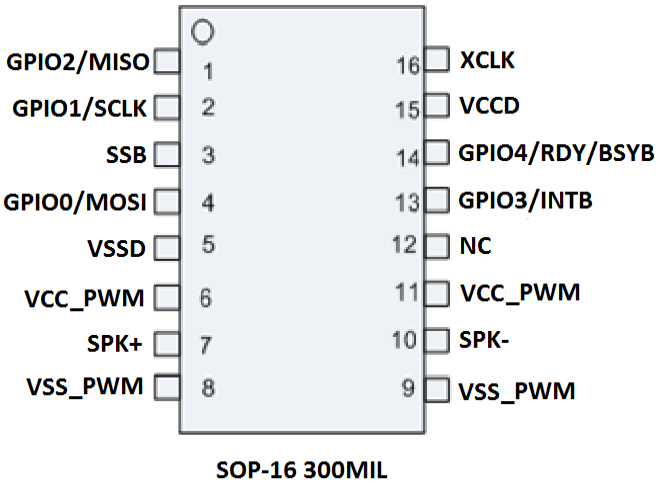

Figure 3-2 ISD2360 16-Lead SOP Pin Configuration

Pin Description

Pin #	Pin Name	I/O	Function
1	NC		None Connected
2	NC		This pin should be left unconnected.
3	MOSI / GPIO0	I	Master-Out-Slave-In. Serial input to the ISD2360 from the host. Can be configured as a general purpose I/O pin.
4	VSSD		Digital Ground
5	NC		None Connected
6	NC		None Connected
7	NC		None Connected
8	NC		None Connected
9	NC		None Connected
10	V_{CCD}_PWM	I	Digital Power for the PWM Driver. It can be from a separate power supply other than V_{CCD}.
11	SPK+	O	PWM driver positive output. This SPK+ output, together with SPK- pin, provide a differential output to drive 8Ω speaker or buzzer. During power down this pin is in tri-state.
12	V_{SSD}_PWM	I	Digital Ground for the PWM Driver.
13	V_{SSD}_PWM	I	Digital Ground for the PWM Driver.
14	SPK-	O	PWM driver negative output. This SPK- output, together with SPK+ pin, provides a differential output to drive 8Ω speaker or buzzer. During power down this pin is tri-state.
15	V_{CCD}_PWM	I	Digital Power for the PWM Driver. It can be from a separate power supply other than V_{CCD}.
16	NC		None Connected
17	NC		None Connected
18	NC		None Connected
19	NC		None Connected
20	NC		None Connected
21	INTB / GPIO3	O	Active low interrupt request pin. This pin is an open-drain output. Can be configured as a general purpose I/O pin.
22	RDY/BSYB / GPIO4	O	An output pin to report the status of data transfer on the SPI interface. "High" indicates that ISD2360 is ready to accept new SPI commands or data. Can be configured as a general purpose I/O pin.
23	NC		None Connected
24	NC		None Connected
25	NC		None Connected
26	V_{CCD}	I	Digital Power. It can be from a separate power supply other than V_{CCD}_PWM.

Pin #	Pin Name	I/O	Function
27	GPIO5	I/O	General purpose I/O pin
28	NC		None Connected
29	MISO / GPIO2	O	Master-In-Slave-Out. Serial output from the ISD2360 to the host. This pin is in tri-state when SSB=1. Can be configured as a general purpose I/O pin.
30	SCLK / GPI1	I	Serial Clock input to the ISD2360 from the host. Can be configured as a general purpose input pin.
31	SSB	I	Slave Select input to the ISD2360 from the host. When SSB is low device is selected and responds to commands on the SPI interface. When asserted, GPIO0/1/2 automatically configure to MOSI/SCLK and MISO respectively. SSB has an internal pull-up to Vccd.
32	NC		None Connected

4 BLOCK DIAGRAM

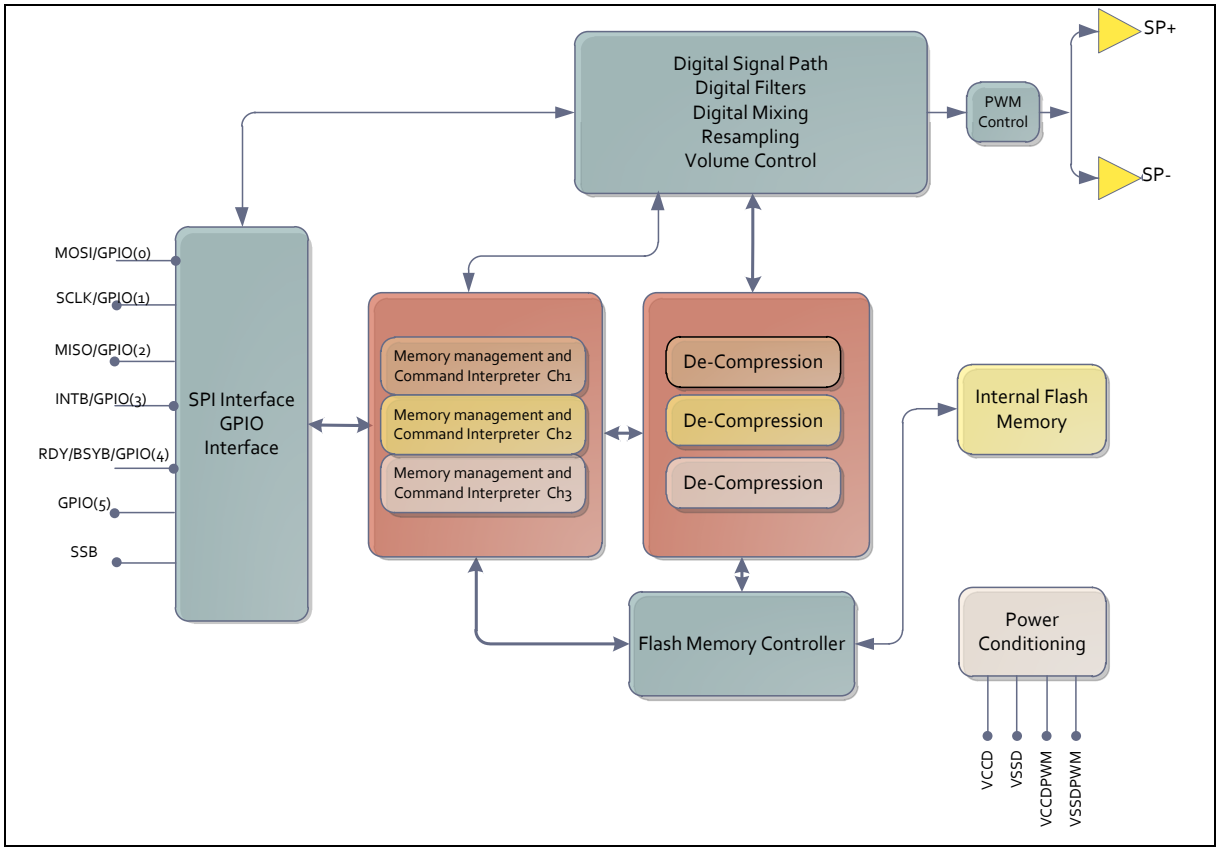

Figure 4-1 ISD2360 Block Diagram

5 ELECTRICAL CHARACTERISTICS

5.1 Absolute Maximum Ratings

Description	Symbol	Condition	Min	Max	Units
DC Power Supply	V_{CCD}	$V_{CCD} – V_{SSD}$	-0.3	+6.0	V
	V_{CCPWM}	$V_{CCPWM} – V_{SSPWM}$	-0.3	+6.0	V
Digital Input Voltage	DV_{IN}	DVIN - VSSD	$V_{SSD} – 0.3$	$V_{CCD} + 0.3$	V
Junction Temperature	TJ	-	-40	+125	°C
Storage Temperature	Tst	-	-65	+150	°C

CAUTION: Do not operate at or near the maximum ratings listed for extended period of time. Exposure to such conditions may adversely influence product reliability and result in failures not covered by warranty. These devices are sensitive to electrostatic discharge; follow proper IC Handling Procedures.

5.2 Operating Conditions

Conditions	Values
Operating temperature range (Case temperature)	-40°C to +85°C
Supply voltage (V_{DD}) [1]	+2.4V to +5.5V
Ground voltage (V_{SS}) [2]	0V
Digital input voltage (DV_{IN})	0V to 5.5V
Voltage applied to any pins	(V_{SS} –0.3V) to (V_{DD} +0.3V)

Notes:

[1] VDD = VCCD = VCCPWM

[2] VSS = VSSD = VSSPWM

5.3 AC Parameters

Internal Oscillator

Parameter	Symbol	Min	Typ	Max	Units	Conditions
Sample rate with Internal Oscillator	F_{Smax}	-1%	32kHz	+1%	kHz	Vdd = 3V At room temperature

Speaker Outputs

Parameter	Symbol	Min	Typ[1]	Max	Units	Condition
Output Power	P_{OUT_SPK}			400	mW	@ 3.3V, Load 4Ω [1]
				1.1	W	@ 5.0V, Load 4Ω [1]
				1.3	W	@ 5.5V, Load 4Ω [1]
				330	mW	@ 3.3V, Load 8Ω [1]
				850	mW	@ 5.0V, Load 8Ω [1]
				1.0	W	@ 5.5V, Load 8Ω [1]
SNR, Memory to SPK+/SPK-	SNR_{MEM_SPK}		60		dB	Load 150 Ω [1] [2]

THD, Memory to SPK+/SPK-	THD %		<1%			Load 8Ω [2]
Minimum Load Impedance	$R_{L(SPK)}$	4	8		Ω	

Notes:
[1] Conditions Vcc=3V, TA=25°C, 0dB FS, 12-bit PCM, 8K SR unless otherwise stated.
[2] All measurements are C-message weighted.

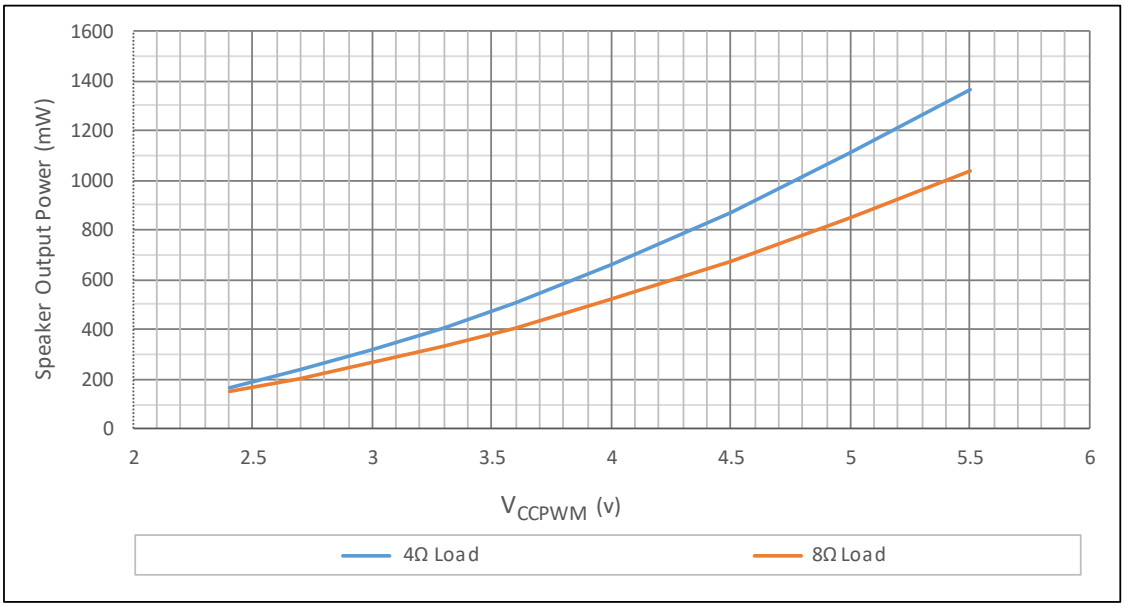

Figure 5-1 Speaker Output Power

5.4 DC Parameters

Parameter	Symbol	Min	Typ [1]	Max	Units	Conditions
Supply Voltage	V_{DD}	2.4		5.5	V	
Input Low Voltage	V_{IL}	V_{SS}-0.3		0.3xV_{DD}	V	
Input High Voltage	V_{IH}	0.7xV_{DD}		V_{DD}	V	
Output Low Voltage	V_{OL}	V_{SS}-0.3		0.3xV_{DD}	V	I_{OL} = 1mA
Output High Voltage	V_{OH}	0.7xV_{DD}		V_{DD}	V	I_{OH} = -1mA
Pull-up Resistance	R_{PU}		50		kΩ	
Pull-down Resistance	R_{PD}		10		kΩ	
INTB Output Low Voltage	V_{OH1}			0.4	V	
Playback Current	$I_{DD_Playback}$		3		mA	No Load [2]
Standby Current	I_{SB}		<1	10	µA	V_{DD}= 3.6V
Input Leakage Current	I_{IL}			±1	µA	Force V_{DD}

Notes:
[1] Conditions VDD=3V, TA=25°C unless otherwise stated
[2] To calculate total current, add load dissipation into application specific load.

5.5 SPI Timing

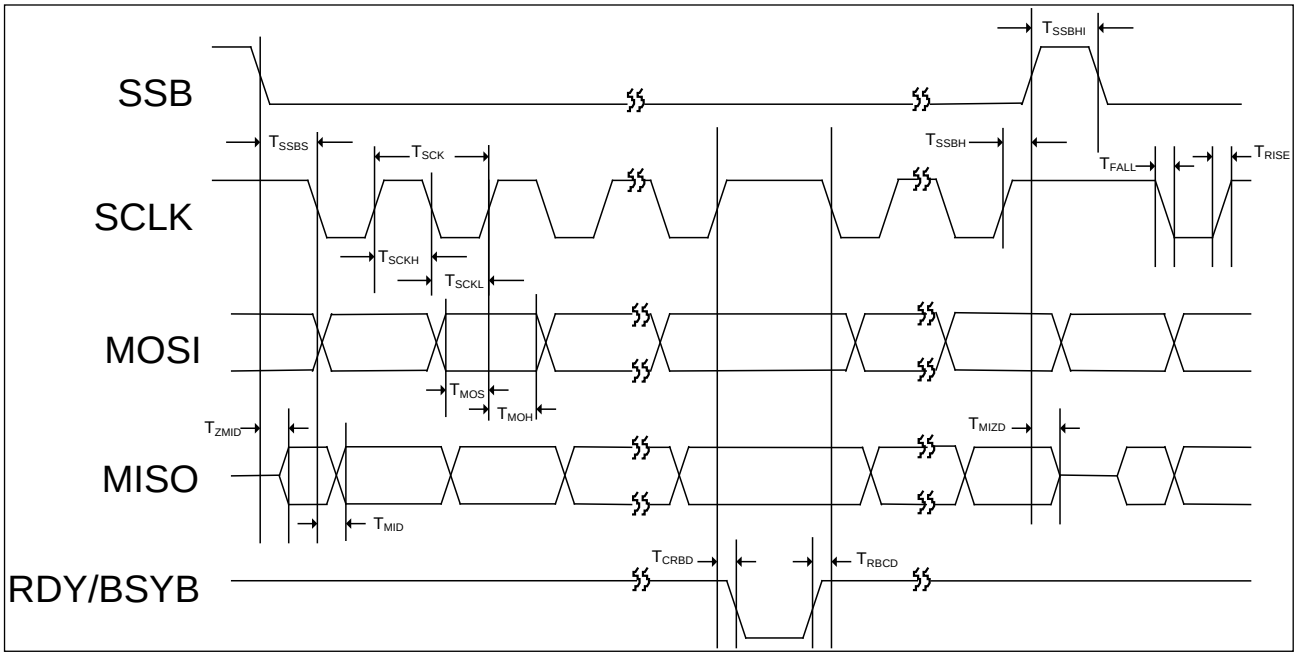

Figure 5-2 SPI Timing

Symbol	Description	Min	Typ	Max	Unit
T_{SCK}	SCLK Cycle Time	60	---	---	ns
T_{SCKH}	SCLK High Pulse Width	25	---	---	ns
T_{SCKL}	SCLK Low Pulse Width	25	---	---	ns
T_{RISE}	Rise Time for All Digital Signals	---	---	10	ns
T_{FALL}	Fall Time for All Digital Signals	---	---	10	ns
T_{SSBS}	SSB Falling Edge to 1st SCLK Falling Edge Setup Time	30	---	---	ns
T_{SSBH}	Last SCLK Rising Edge to SSB Rising Edge Hold Time	30ns	---	50us	---
T_{SSBHI}	SSB High Time between SSB Lows	20	---	---	ns
T_{MOS}	MOSI to SCLK Rising Edge Setup Time	15	---	---	ns
T_{MOH}	SCLK Rising Edge to MOSI Hold Time	15	---	---	ns
T_{ZMID}	Delay Time from SSB Falling Edge to MISO Active	--	--	12	ns
T_{MIZD}	Delay Time from SSB Rising Edge to MISO Tri-state	--	--	12	ns
T_{MID}	Delay Time from SCLK Falling Edge to MISO	---	---	12	ns
T_{CRBD}	Delay Time: SCLK Rising Edge to RDY/BSYB Falling Edge	--	--	12	ns
T_{RBCD}	Delay Time: RDY/BSYB Rising Edge to SCLK Falling Edge	0	--	--	ns

6 FUNCTIONAL DESCRIPTION (BASIC)

6.1 Voice Prompt

Voice Prompt, or VP in short, is the basic audio clip which can be played by ISD ChipCorder device. VP is generated after an audio wave file is imported into a VPE project, and after re-sampled and compressed in that project.

Each VP is assigned with an index. VP index and its audio data are linked into application image during VPE project compilation.

6.2 Voice Macro

Voice Macro, or VM in short, is an audio command script which allows device to do a sequence of operations at once, for example configuring multiple registers and play one more multiple VPs afterwards.

User can execute a VM by either send SPI/I2C command or by GPIO trigger. A VM can be invoked by other VM as well.

6.3 Operation Mode

ISD2360 device operates under SPI mode, or GPIO trigger mode.

- ISD2360 SPI interface supports SPI mode 3.
- The six GPIO pins of the ISD2360 can be configured for a variety of purposes. Each pin can be configured to trigger a Voice Macro function. Each pin also has an alternate function allowing the pins to be configured as SPI, interrupt or oscillator reference pins.

6.4 Signal Path

The signal path performs filtering, sample rate conversion, volume control and decompression. A block diagram of the signal path is shown in **Error! Reference source not found.**. The PWM driver output pins SPK- and SPK+ provide a differential output to drive an 8Ω speaker or buzzer. During power down these pins are in tri-state.

Pre-compressed audio transfers from memory or SPI interface through the de-compressor block to PWM driver or SPI out. The audio level is adjustable via VOLC before going out on to the PWM driver path. The possible path combinations are:

MEMORY → DECOMPRESS → SPKR (Playback to speaker)

MEMORY → DECOMPRESS → SPI_OUT (SPI playback)

SPI_IN → DECOMPRESS → SPKR (SPI decode to speaker)

For example, to playback audio to speaker, enable decompression and PWM (write 0x44 to register 0x02) then send a PLAY_VP command to play audio.

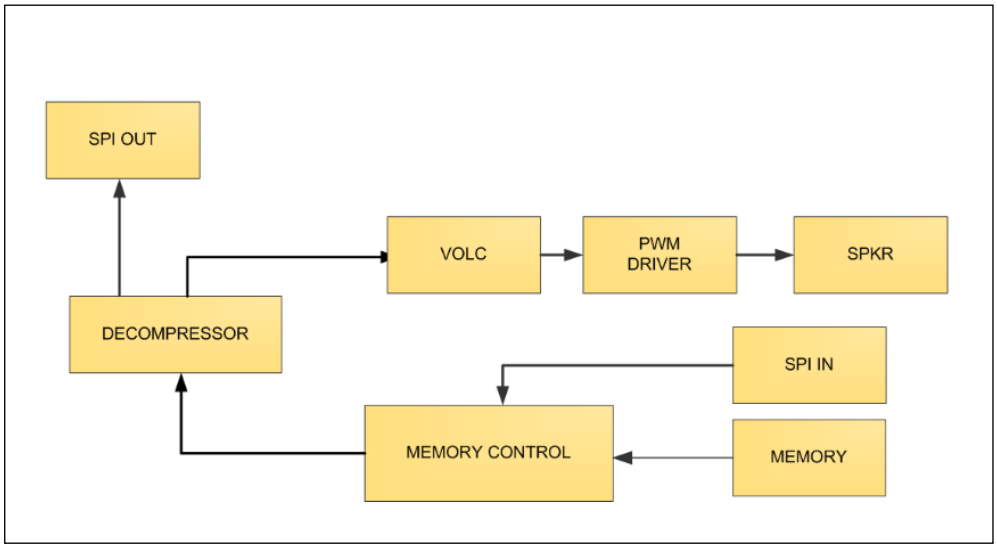

Figure 6-1 ISD2360 Signal Path

7 APPLICATION DIAGRAM

7.1 SPI Mode Application

The following applications example is for reference only. It makes no representation or warranty that such applications shall be suitable for the use specified. Each design has to be optimized in its own system for the best performance on voice quality, current consumption, functionality etc.

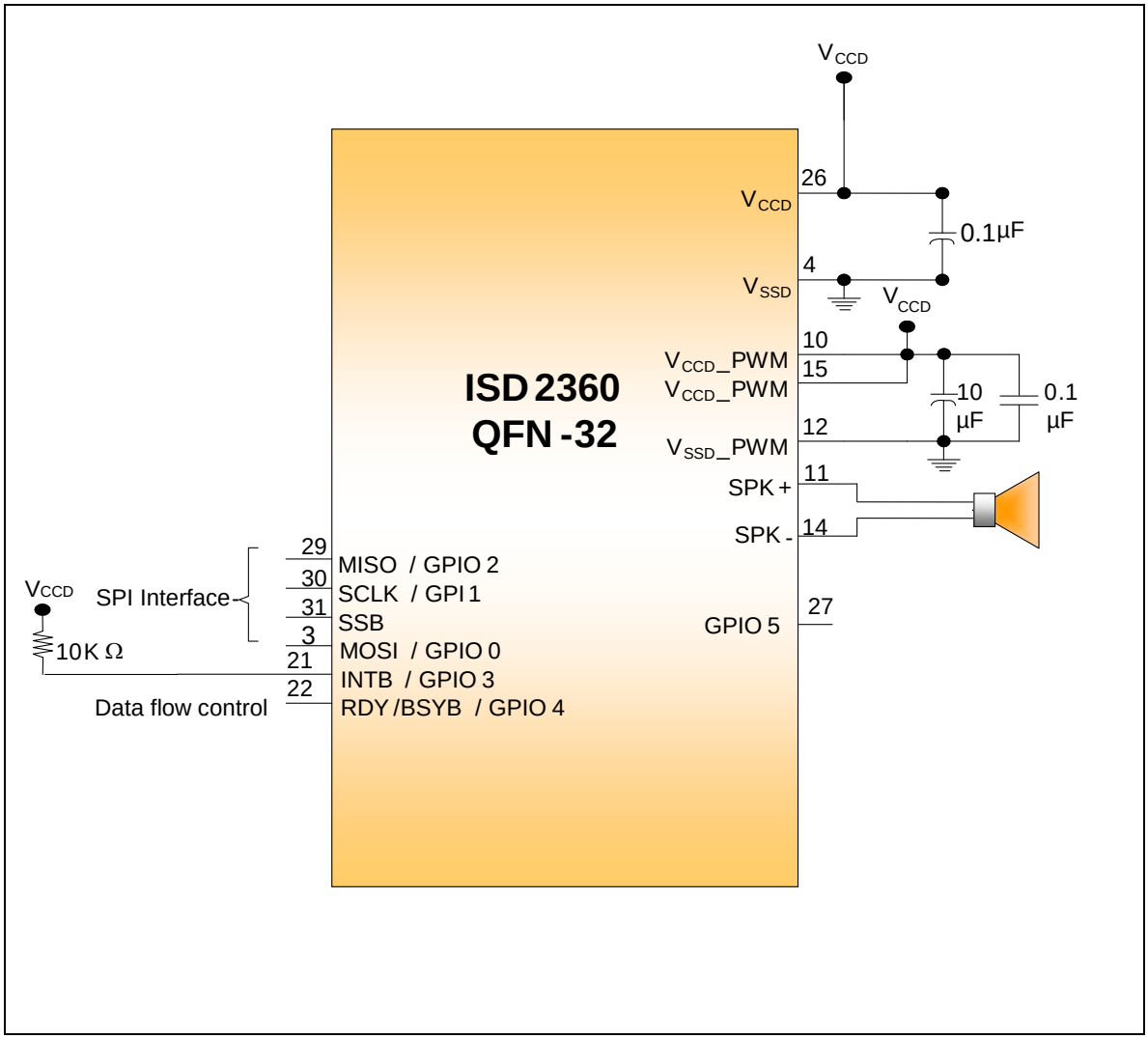

Figure 7-1 ISD2360 Application Diagram Example for MCU SPI Mode

7.2 Standalone Application

The following applications example is for reference only. It makes no representation or warranty that such applications shall be suitable for the use specified. Each design has to be optimized in its own system for the best performance on voice quality, current consumption, functionality etc.

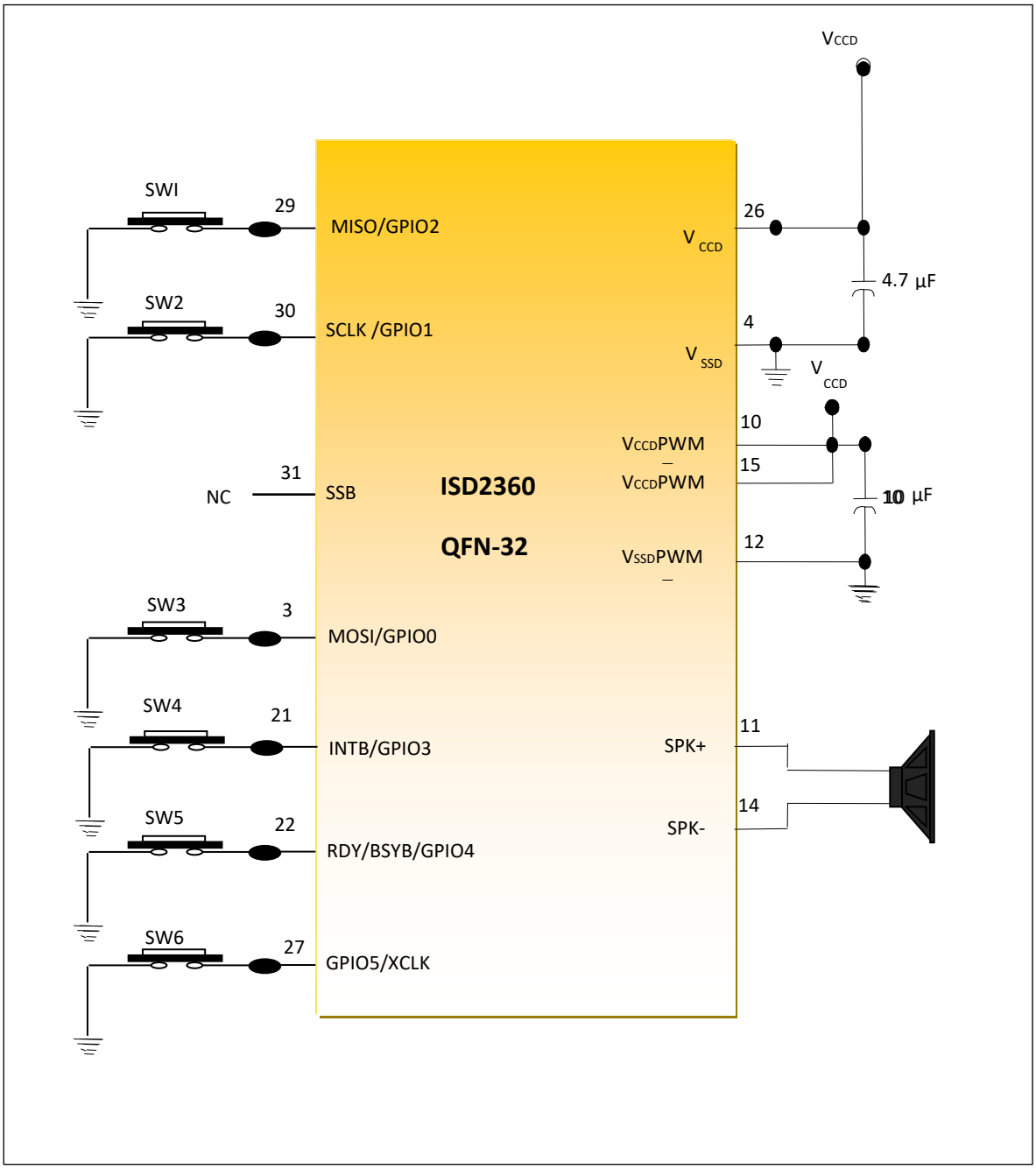

Figure 7-2 ISD2360 Application Diagram Standalone Mode

8 PACKAGE DIMENSION

The ISD2360 is available in a QFN 32-Lead package, as shown in Figure 14-14-1.

QFN 32L 5X5 mm², Thickness 0.8 mm(Max),
Pitch 0.5 mm (Saw Type) TICP EP SIZE 3.5X3.5 mm²

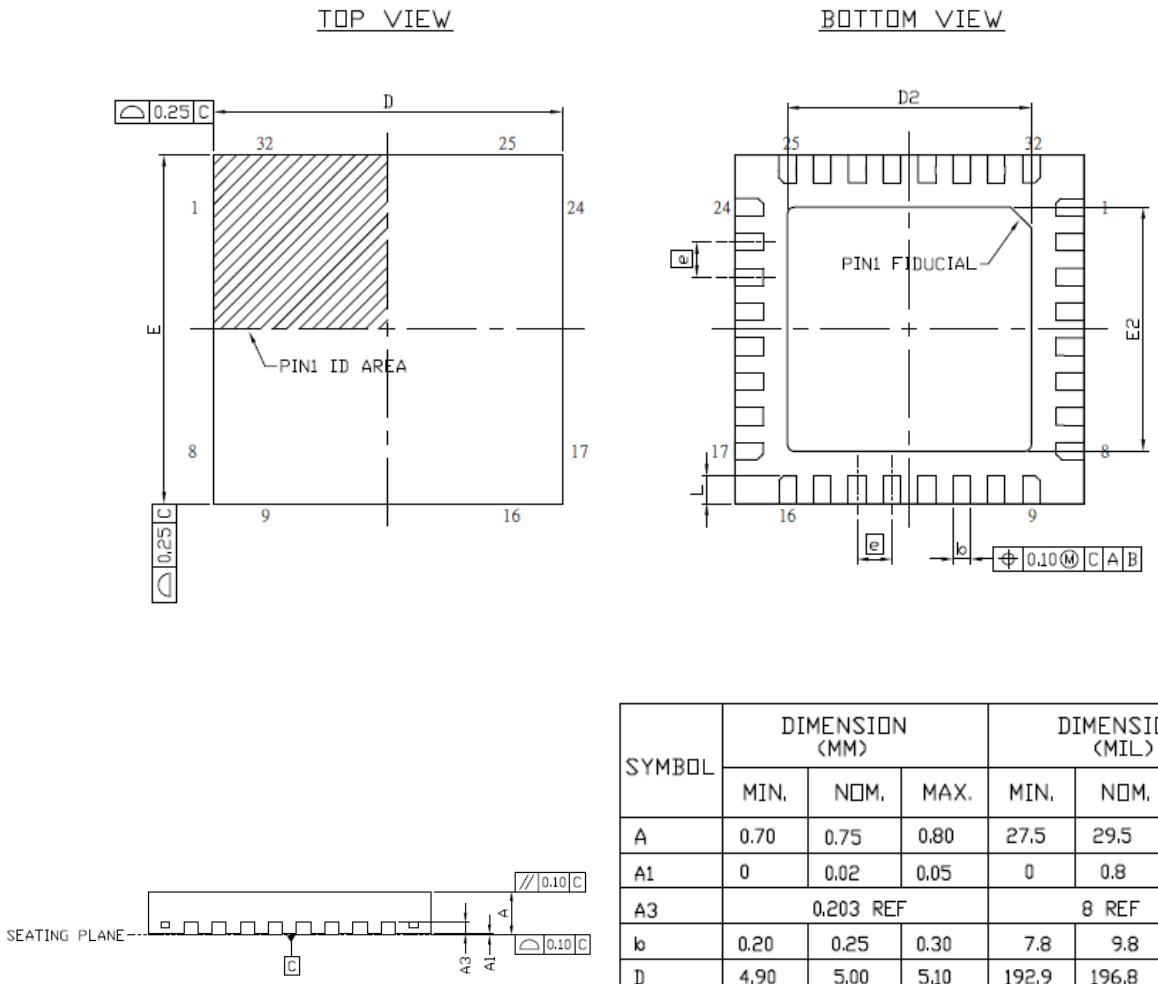

SYMBOL	DIMENSION (MM)			DIMENSION (MIL)		
	MIN.	NOM.	MAX.	MIN.	NOM.	MAX.
A	0.70	0.75	0.80	27.5	29.5	31.5
A1	0	0.02	0.05	0	0.8	2.0
A3	0.203 REF			8 REF		
b	0.20	0.25	0.30	7.8	9.8	11.8
D	4.90	5.00	5.10	192.9	196.8	200.7
D2	3.40	3.50	3.60	133.8	137.8	141.7
E	4.90	5.00	5.10	192.9	196.8	200.7
E2	3.40	3.50	3.60	133.8	137.8	141.7
e	0.50 BSC			19.7 BSC		
L	0.35	0.40	0.45	13.7	15.7	17.7

Figure 8-1 QFN 32-Lead Package

Lead 300-MIL SOP

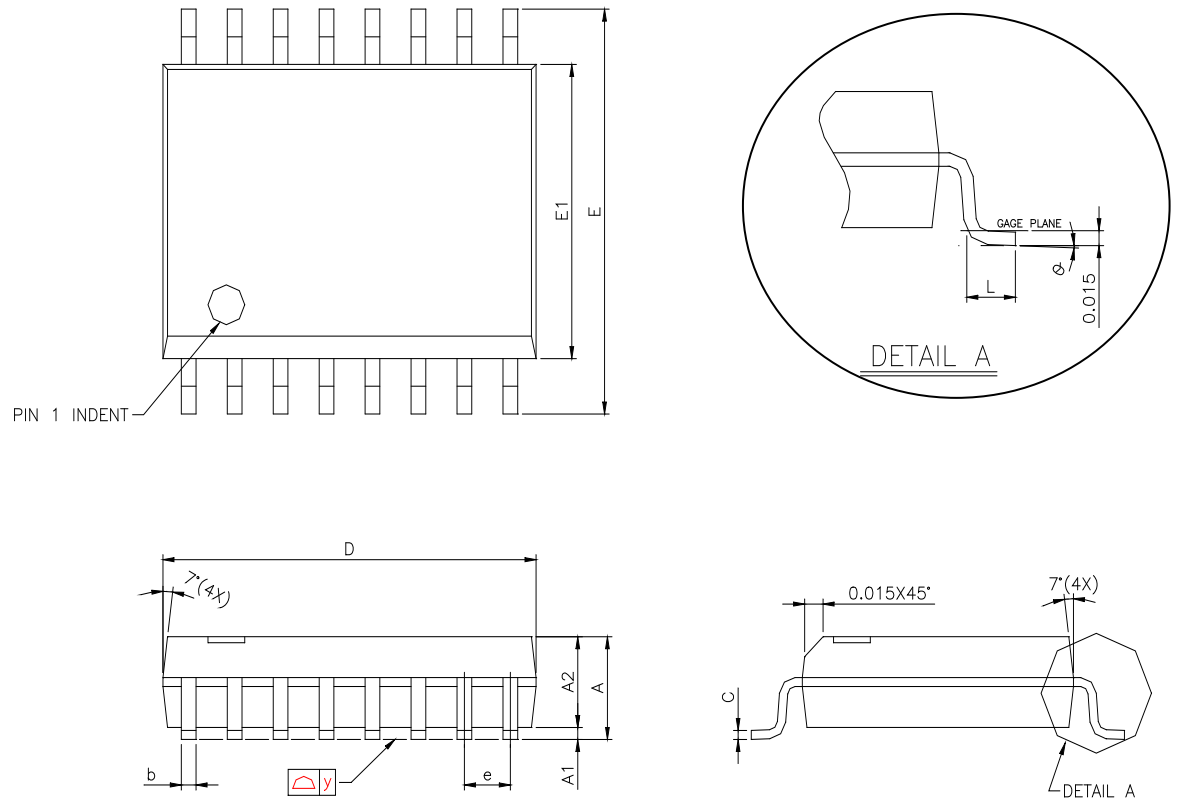

SYMBOLS	DIMENSIONS IN MILLIMETERS			DIMENSIONS IN INCHES		
	MIN	NOM	MAX	MIN	NOM	MAX
A	2.36	2.49	2.64	0.093	0.098	0.104
A1	0.10	——	0.30	0.004	——	0.012
A2	——	2.31	——	——	0.091	——
b	0.33	0.41	0.51	0.013	0.016	0.020
C	0.18	0.23	0.28	0.007	0.009	0.011
D	10.08	10.31	10.49	0.397	0.406	0.413
E	10.01	10.31	10.64	0.394	0.406	0.419
E1	7.39	7.49	7.59	0.291	0.295	0.299
e	——	1.27	——	——	0.050	——
L	0.38	0.81	1.27	0.015	0.032	0.050
y	——	——	0.076	——	——	0.003
θ	0°	——	8°	0°	——	8°

Figure 8-2 SOP 16-Lead Package

9 ORDERING INFORMATION

Package Number	Part Number	Ordering Number	Duration	Package	Temperature	Notes
ISD2360SYI	ISD2360SYI	I2360SYI	64sec	SOP-16	-40°C ~ 85°C	
ISD2360YYI	ISD2360YYI	I2360YYI	64sec	QFN-32	-40°C ~ 85°C	

ISD23____

Temperature:

I = -40°C ~ 85°C

Duration:

60: 64 Seconds

(Based on 8kHz/4bit ADPCM)

Package Material:

Y = Green Package (Halogen-free, RoHS-compliant) & TSCA-compliant

Package Type:

Y = QFN-32

S = SOP-16

10 REVISION HISTORY

Revision	Date	Description
1.0	May 27, 2025	Initial Release

IMPORTANT NOTICE

Nuvoton Products are neither intended nor warranted for usage in systems or equipment, any malfunction or failure of which may cause loss of human life, bodily injury or severe property damage. Such applications are deemed, "Insecure Usage".

Insecure usage includes, but is not limited to: equipment for surgical implementation, atomic energy control instruments, airplane or spaceship instruments, the control or operation of dynamic, brake or safety systems designed for vehicular use, traffic signal instruments, all types of safety devices, and other applications intended to support or sustain life.

All Insecure Usage shall be made at customer's risk, and in the event that third parties lay claims to Nuvoton as a result of customer's Insecure Usage, customer shall indemnify the damages and liabilities thus incurred by Nuvoton.

Please note that all data and specifications are subject to change without notice.
All the trademarks of products and companies mentioned in this datasheet belong to their respective owners.