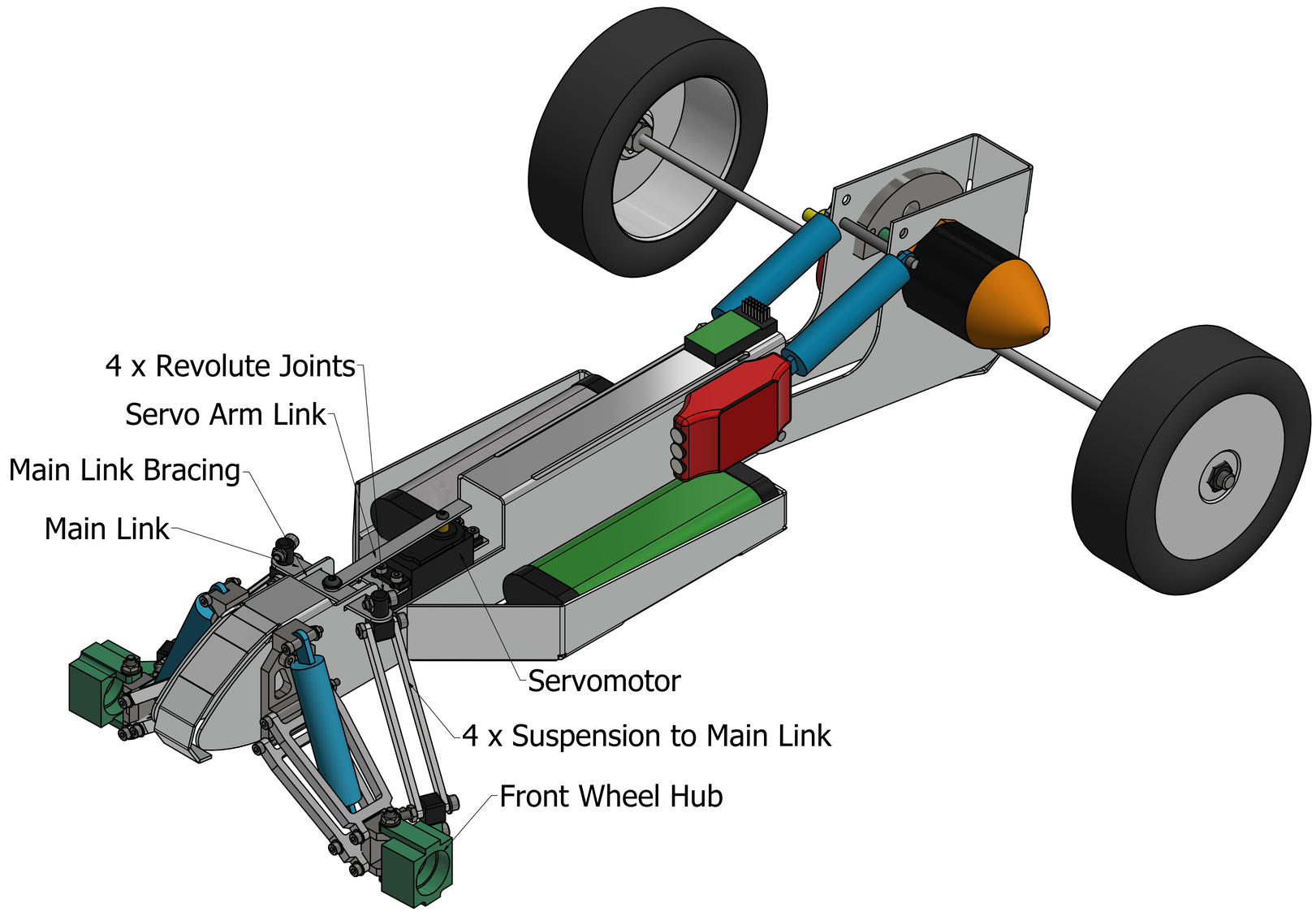

DRAWN justi	21/05/2020	Justin Karumathy - TEAM 2
CHECKED		TITLE Y-axis Sliding Cart for Gantry Cargo Handler
QA		
MFG		
APPROVED		
		SIZE B / DWG NO X-axisCart / REV
		SCALE 9/10 / SHEET 1 OF 1