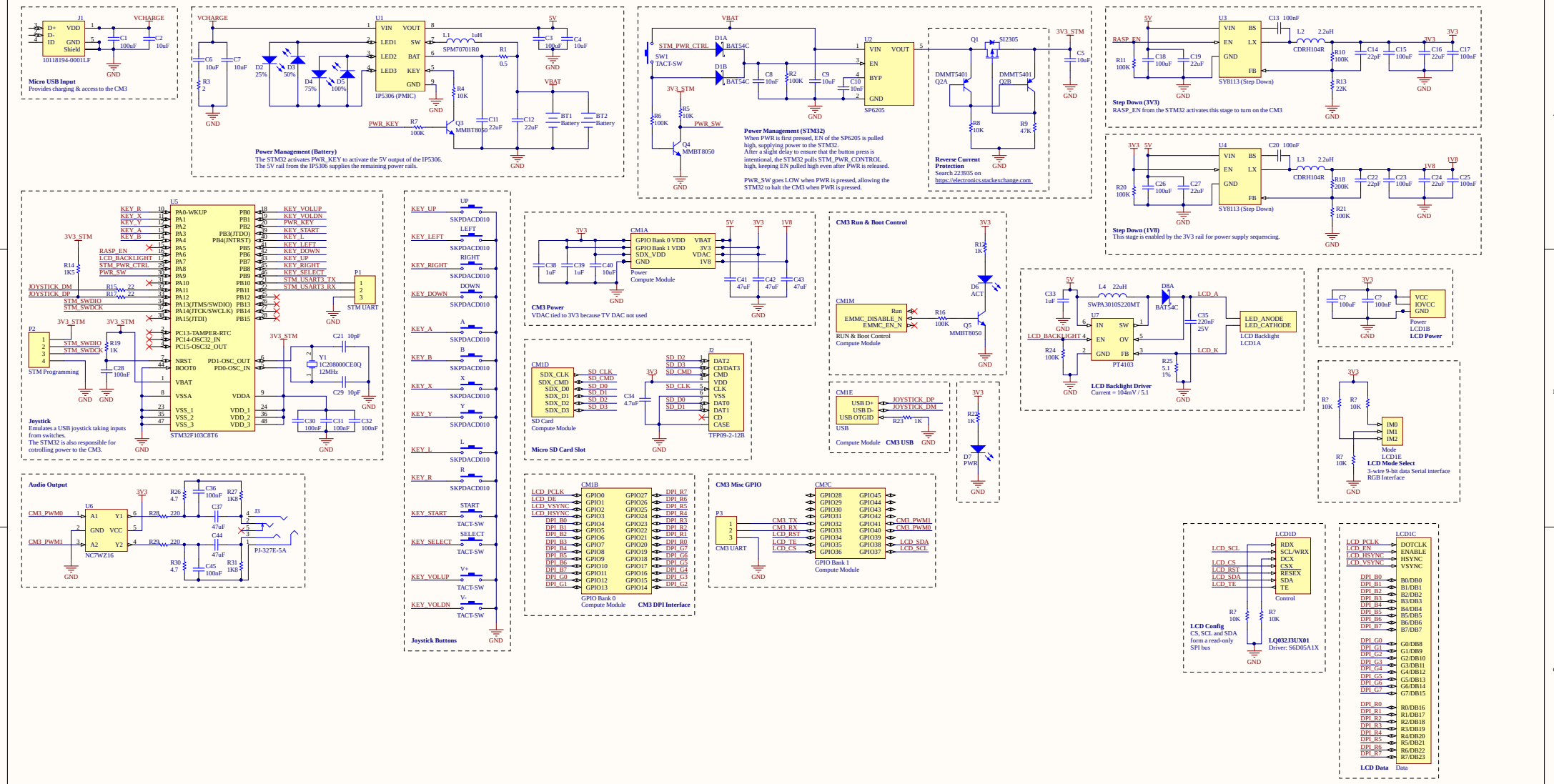

Title		
Size A2	Number	Revision
Date: 17/8/2018	Sheet of	
File: C:\Users\..\RetroPie-CM3.SchDoc	Drawn By:	