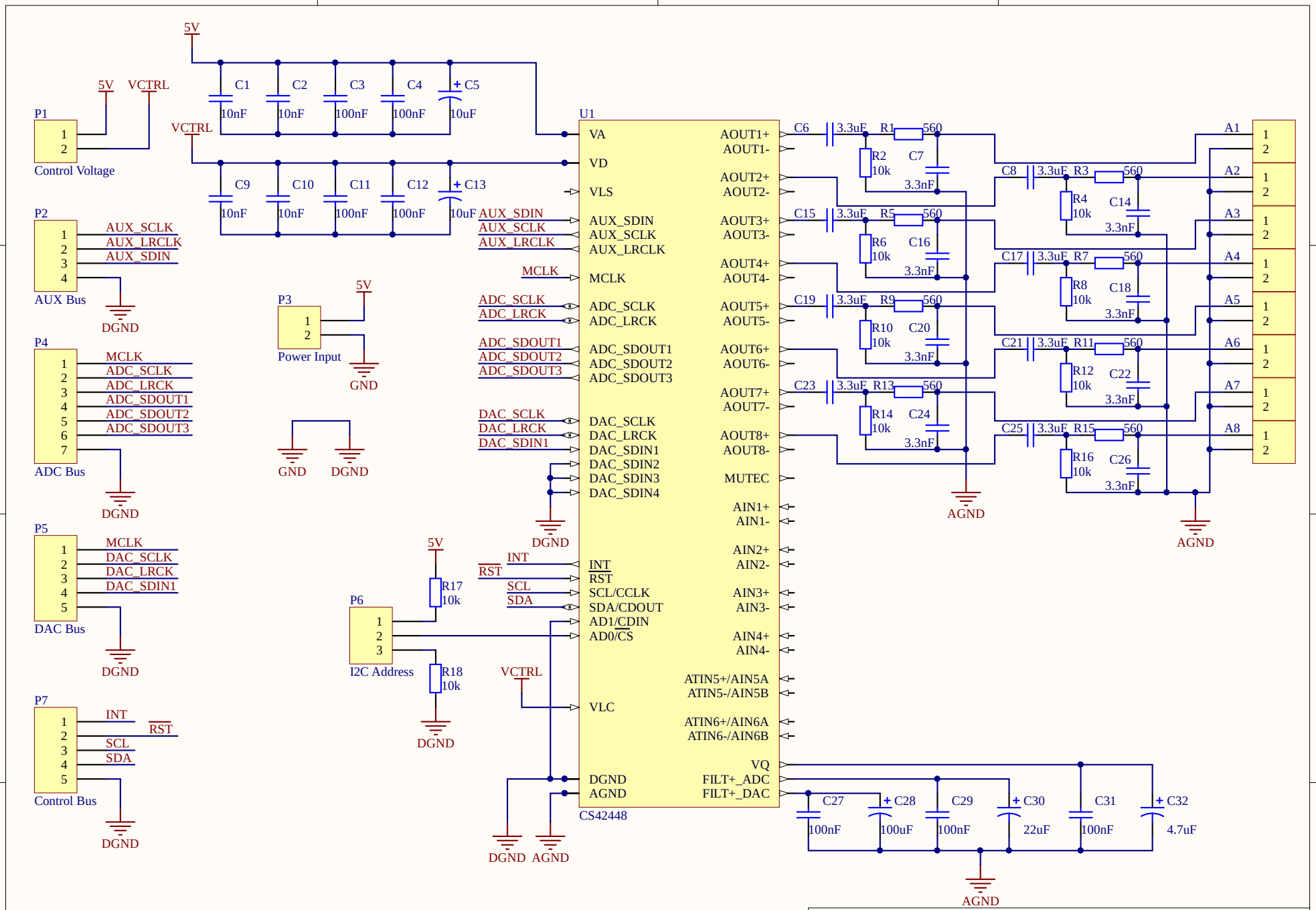

Title		
Size A	Number	Revision
Date: 12/2/2017		Sheet of
File: C:\Users\..\cs42448_breakout.SchDoc		Drawn By: