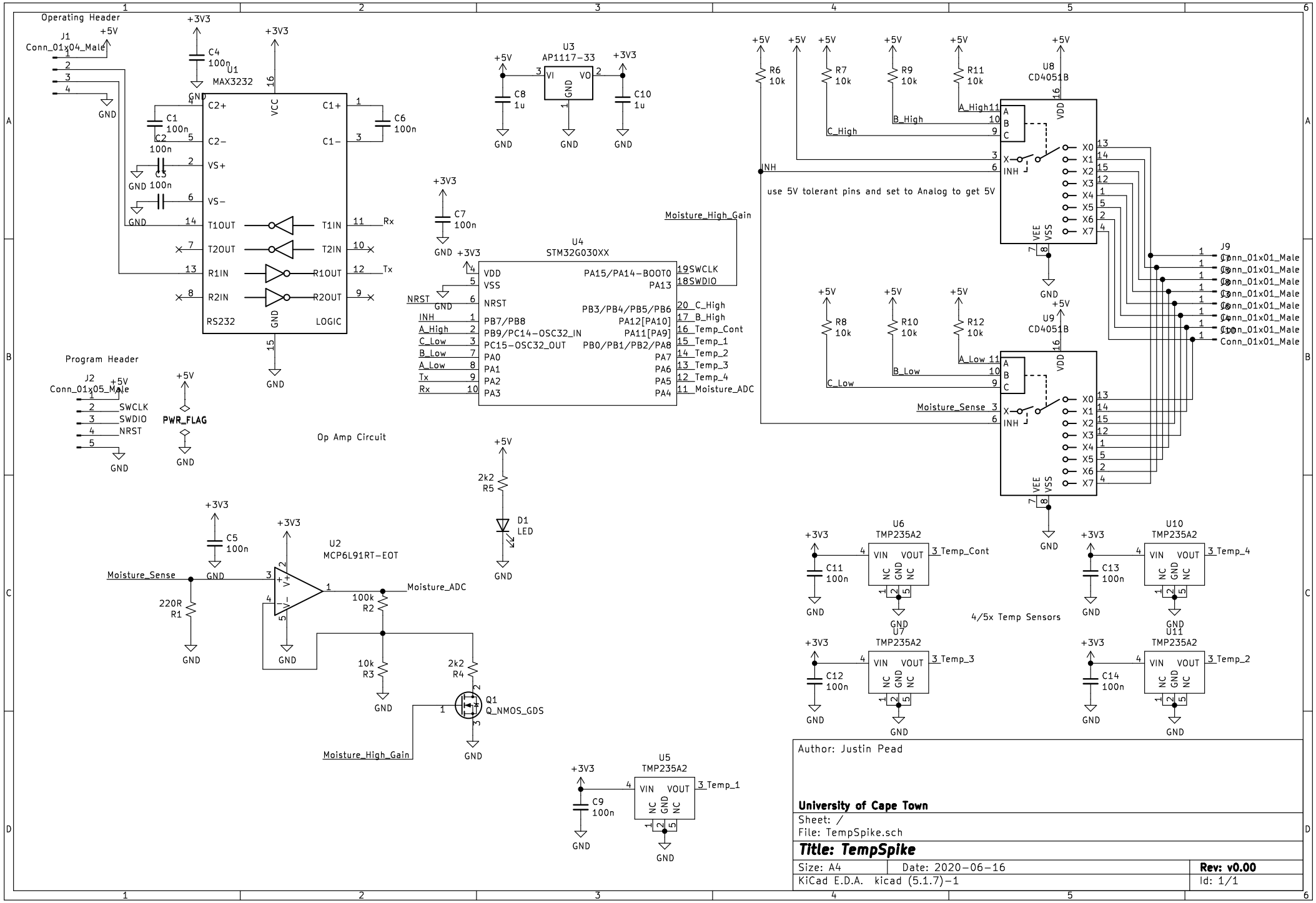

Author: Justin Pead

University of Cape Town

Sheet: /

File: TempSpike.sch

Title: TempSpike

Size: A4	Date: 2020−06−16	**Rev: v0.00**
KiCad E.D.A. kicad (5.1.7)−1		Id: 1/1