# LTC3531/ LTC3531-3.3/LTC3531-3

## 200mA Buck-Boost Synchronous DC/DC Converters

## FEATURES

- **Regulated Output with Input Above, Below or Equal to the Output**
- **Single Inductor**
- **Up to 90% Efficiency**
- **$V_{IN}$ Range: 1.8V to 5.5V**
- **200mA at $3.3V_{OUT}$ from 3.6V Input**
- **125mA at $3V_{OUT}$ from 2.5V Input**
- Fixed $V_{OUT}$ Versions (TSOT, DFN): 3.3V, 3V
- Adjustable $V_{OUT}$ Version (DFN): 2V to 5V
- Burst Mode® Operation, No External Compensation
- Ultra Low Quiescent Current: 16µA, Shutdown Current <1µA
- Only 3 External Components Required (Fixed Voltage Versions)
- Short-Circuit Protection
- Output Disconnect in Shutdown
- Available in 6-Pin ThinSOT and 3mm × 3mm DFN Packages

## APPLICATIONS

- Handheld Instruments
- MP3 Players
- Handheld computers
- PDA/GPS

## DESCRIPTION

The LTC®3531/LTC3531-3.3/LTC3531-3 are synchronous buck-boost DC/DC converters that operate from input voltages above, below or equal to the output voltage. The topology incorporated in the ICs provides a continuous transfer through all operating modes, making the product ideal for single cell Li-Ion and multicell alkaline or nickel applications. The converters operate in Burst Mode, minimizing solution footprint and component count as well as providing high conversion efficiency over a wide range of load currents.

The devices include two 0.5Ω N-channel MOSFET switches and two P-channel switches (0.5Ω, 0.8Ω). Quiescent current is typically 16µA, making the parts ideal for battery power applications. Other features include a <1µA shutdown current, current limiting, thermal shutdown and output disconnect. The parts are offered in a 6-pin ThinSOT™ package for fixed voltage versions or a 3mm × 3mm DFN package for fixed and adjustable versions.

LT, LTC and LTM are registered trademarks of Linear Technology Corporation.
Burst Mode is a registered trademark of Linear Technology Corporation.
ThinSOT is a trademark of Linear Technology Corporation.
All other trademarks are the property of their respective owners.
Protected by U.S. Patents including 6166527.

## TYPICAL APPLICATION

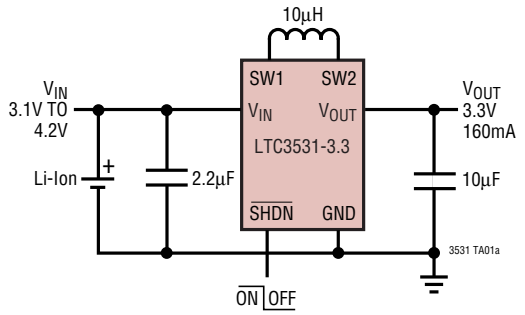


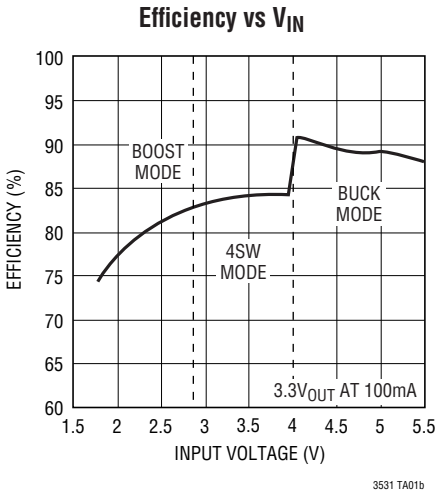

## ABSOLUTE MAXIMUM RATINGS

**(Note 1)**

VIN, VOUT, SW1, SW2, $\overline{SHDN}$ Voltage .....–0.3 to 6V
SW1, SW2 Voltage, <100ns Pulse .....–0.3 to 7V
Operating Temperature Range (Notes 2, 3) –40°C to 85°C
Storage Temperature Range..... –65°C to 125°C
Lead Temperature (TS6, Soldering, 10 sec)..... 300°C

## PACKAGE/ORDER INFORMATION

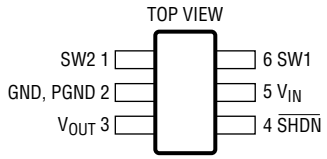


S6 PACKAGE
6-LEAD PLASTIC TSOT-23
$T_{JMAX}$ = 125°C, $\theta_{JA}$ = 102°C/W

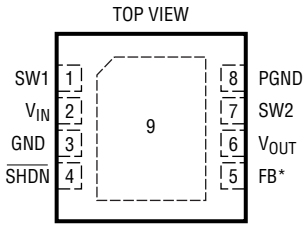


DD PACKAGE
8-LEAD (3mm × 3mm) PLASTIC DFN
$T_{JMAX}$ = 125°C, $\theta_{JA}$ = 43°C/W
EXPOSED PAD IS GND (PIN 9), MUST BE SOLDERED TO PCB
*NC FOR LTC3531-3.3V, LTC3531-3.0V.

| ORDER PART NUMBER | S6 PART MARKING | ORDER PART NUMBER | DD PART MARKING |
|---|---|---|---|
| LTC3531ES6-3.3<br>LTC3531ES6-3 | LTBWM<br>LTCBK | LTC3531EDD<br>LTC3531EDD-3.3<br>LTC3531EDD-3 | LBVC<br>LBWH<br>LCBV |

**Order Options** Tape and Reel: Add #TR Lead Free: Add #PBF Lead Free Tape and Reel: Add #TRPBF
Lead Free Part Marking: http://www.linear.com/leadfree/

Consult LTC Marketing for parts specified with wider operating temperature ranges.

## ELECTRICAL CHARACTERISTICS

**The ● denotes the specifications which apply over the full operating temperature range, otherwise specifications are at $T_A$ = 25°C. $V_{IN}$ = 3.6V $V_{OUT}$ = 3.3V unless otherwise noted.**

| PARAMETER | | CONDITIONS | | MIN | TYP | MAX | UNITS |
|---|---|---|---|---|---|---|---|
| **$V_{IN}$** | | | | | | | |
| Minimum Startup Voltage | | | ● | | 1.65 | 1.8 | V |
| **$V_{OUT}$ Regulation** | | | | | | | |
| Output Voltage (3.3V Version) | | No Load | ● | 3.25 | 3.32 | 3.39 | V |
| Output Voltage (3V Version) | | No Load | ● | 2.95 | 3.02 | 3.09 | V |
| FB Voltage (Adj Version) | | No Load | ● | 1.20 | 1.225 | 1.25 | V |
| FB Input Current (Adj Version) | | $V_{FB}$ = 1.225V | | | 1 | 50 | nA |
| **Operating Current** | | | | | | | |
| Quiescent Current in Sleep: | $V_{IN}$<br>$V_{OUT}$ | $V_{IN}$ = 5V, $V_{OUT}$ = 3.6V, FB = 1.3V<br>$V_{OUT}$ = 3.6V | | | 16<br>6 | 30<br>10 | µA<br>µA |
| Shutdown Current | $V_{IN}$ | $\overline{SHDN}$ = 0V, $V_{OUT}$ = 0V | | | | 1 | µA |
| **Switch Performance** | | | | | | | |
| NMOS Switch Leakage | | Switches B and C | | | 0.2 | 2 | µA |
| PMOS Switch Leakage | | Switches A and D | | | 0.2 | 2 | µA |
| NMOS B, C $R_{DSON}$ | | $V_{IN}$ = 5V | | | 0.5 | | Ω |
| PMOS A $R_{DSON}$ | | $V_{IN}$ = 5V | | | 0.5 | | Ω |

## ELECTRICAL CHARACTERISTICS

**The ● denotes the specifications which apply over the full operating temperature range, otherwise specifications are at $T_A$ = 25°C. $V_{IN}$ = 3.6V $V_{OUT}$ = 3.3V unless otherwise noted.**

| PARAMETER | CONDITIONS | | MIN | TYP | MAX | UNITS |
|---|---|---|---|---|---|---|
| PMOS D $R_{DSON}$ (3.3V Version or Adjustable Version set to 3.3V) | $V_{OUT}$ = 3.1V | | | 0.8 | | Ω |
| PMOS D $R_{DSON}$ (3V Version) | $V_{OUT}$ = 2.8V | | | 0.9 | | Ω |
| Peak Current Limit | L = 10μH, $V_{IN}$ = 5V | | 295 | 365 | 460 | mA |
| **$\overline{SHDN}$** | | | | | | |
| $\overline{SHDN}$ Input Threshold | | | 0.4 | 1 | 1.4 | V |
| $\overline{SHDN}$ Hysteresis | | | | 60 | | mV |
| $\overline{SHDN}$ Leakage Current | $V_{\overline{SHDN}}$ | | | 0.01 | 1 | μA |

**Note 1:** Stresses beyond those listed under Absolute Maximum Ratings may cause permanent damage to the device. Exposure to any Absolute Maximum Rating condition for extended periods may affect device reliability and lifetime.

**Note 2:** This IC includes overtemperature protection that is intended to protect the device during momentary overload conditions. Junction temperature will exceed 125°C when overtemperature protection is active. Continuous operation above the specified maximum operating junction temperature may result in device degradation or failure.

**Note 3:** The LTC3531 is guaranteed to meet performance specifications from 0°C to 70°C. Specifications over the –40°C to 85°C operating temperature range are assured by design, characterization and correlation with statistical process controls.

## TYPICAL PERFORMANCE CHARACTERISTICS

**$T_A$ = 25°C unless otherwise specified.**

**Maximum $I_{OUT}$ vs $V_{IN}$ (3.3V Version)**

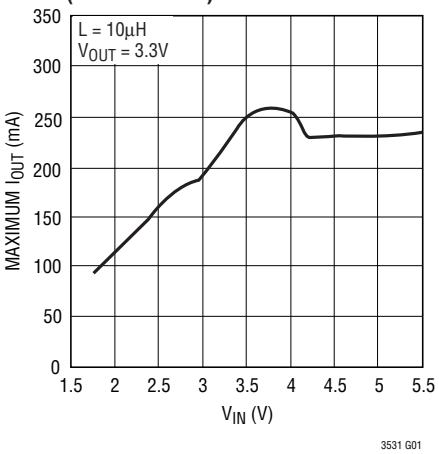


**$I_{PEAK}$, $I_{VALLEY}$, $I_{ZERO}$ vs $V_{IN}$**

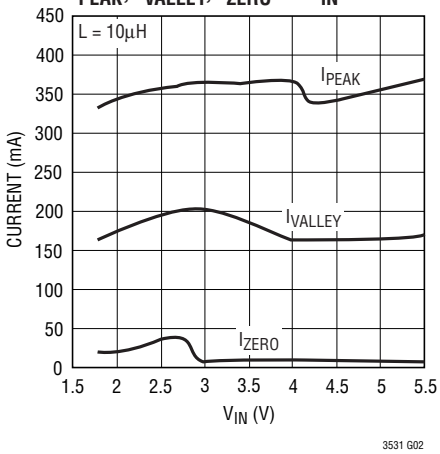


**Sleep Currents**

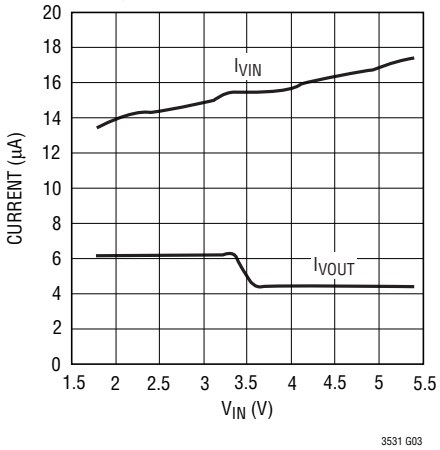


**$I_{IN}$ Short Circuit vs $V_{IN}$**

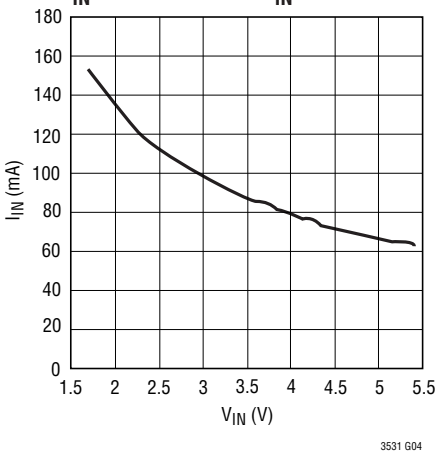


**$V_{OUT}$ Ripple vs $C_{OUT}$ (3.3V Version)**

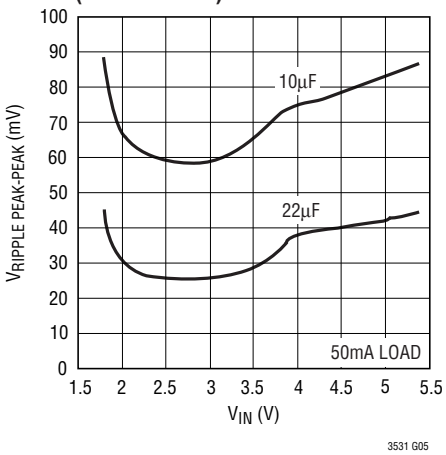


**Load Regulation vs $C_{OUT}$ (3.3V Version)**

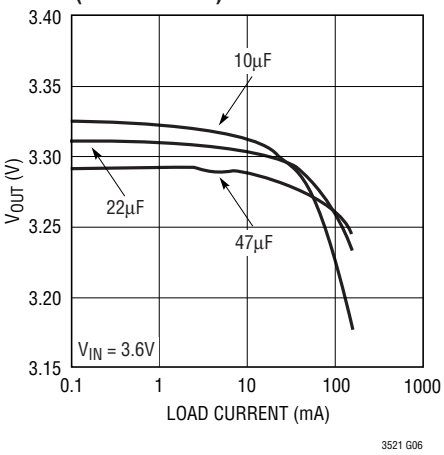

## TYPICAL PERFORMANCE CHARACTERISTICS

$T_A$ = 25°C unless otherwise specified.

**Start-Up into Resistive Load L = 10µH**

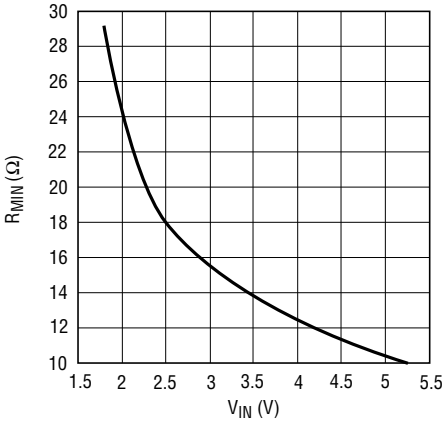


**Burst Frequency vs Load (3.3V Version)**

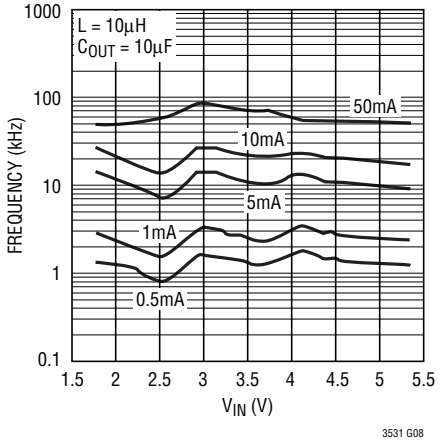


**$V_{OUT}$ Regulation vs Temperature (3.3V Version)**

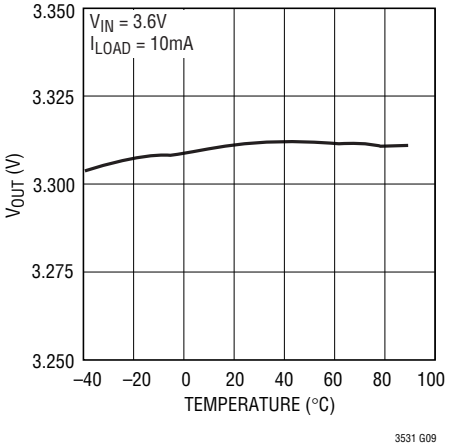


**Switch On Resistances**

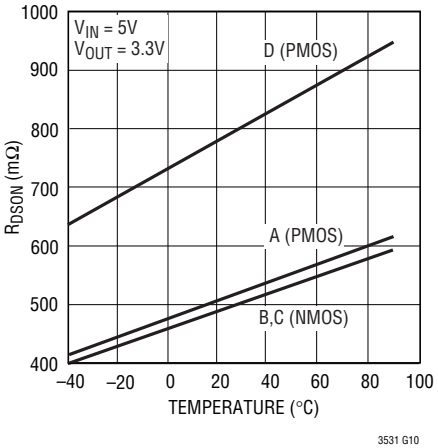


**$I_{PEAK}$, $I_{VALLEY}$ vs Temperature**

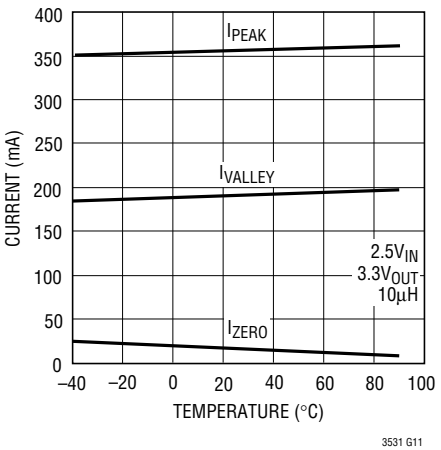


**$\overline{SHDN}$ Pin Threshold and Hysteresis**

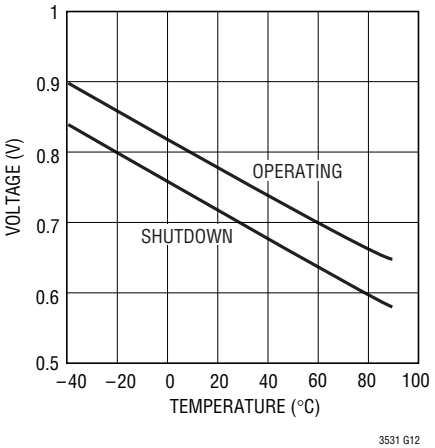

## TYPICAL PERFORMANCE CHARACTERISTICS

$T_A$ = 25°C unless otherwise specified.

**Buck Mode at $5V_{IN}$, $3.3V_{OUT}$ 200mA**

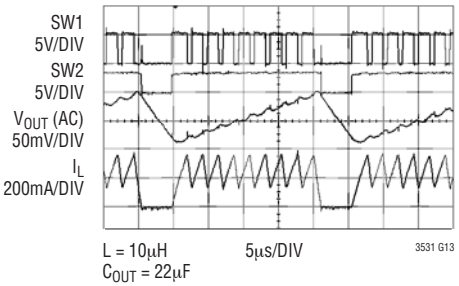


**Buck Mode at $5V_{IN}$, $3.3V_{OUT}$ 100mA**

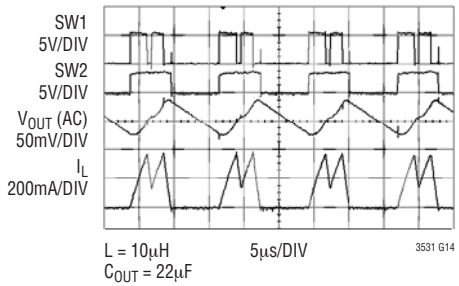


**Buck Mode Waveforms at $5V_{IN}$, $3.3V_{OUT}$ 20mA**

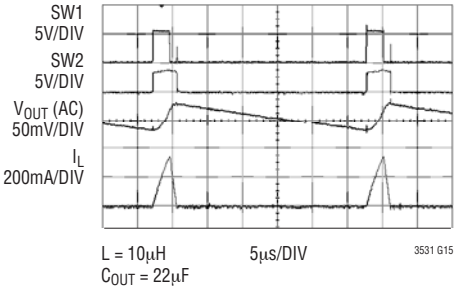


**4 Switch Mode Waveforms at $3.6V_{IN}$, $3.3V_{OUT}$ 200mA**

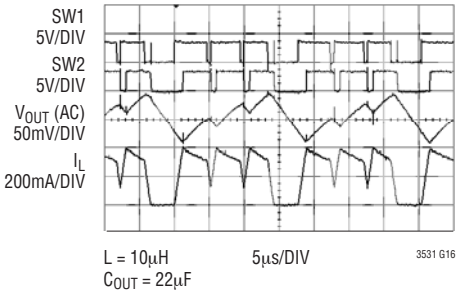


**4 Switch Mode Waveforms at $3.6V_{IN}$, $3.3V_{OUT}$ 100mA**

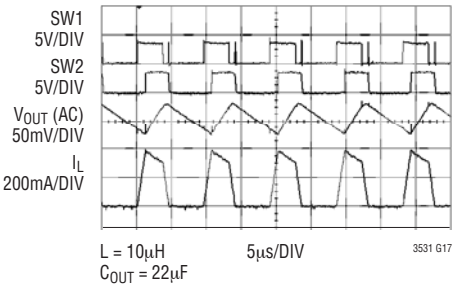


**4 Switch Mode Waveforms at $3.6V_{IN}$, $3.3V_{OUT}$ 20mA**

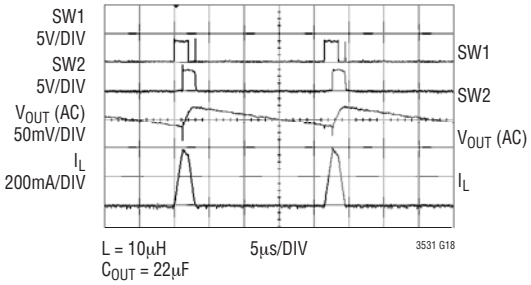

## TYPICAL PERFORMANCE CHARACTERISTICS

$T_A$ = 25°C unless otherwise specified.

**Boost Mode Waveforms at 2.5$V_{IN}$, 3.3$V_{OUT}$ 100mA**

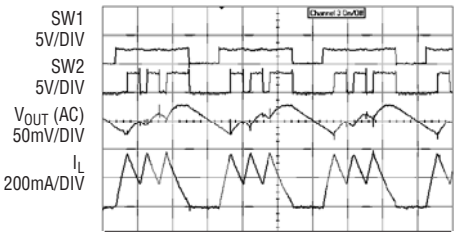


**Boost Mode Waveforms at 2.5$V_{IN}$, 3.3$V_{OUT}$ 20mA**

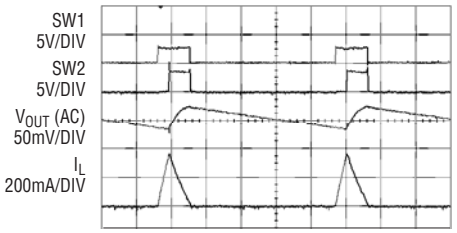


**Shorted Output**

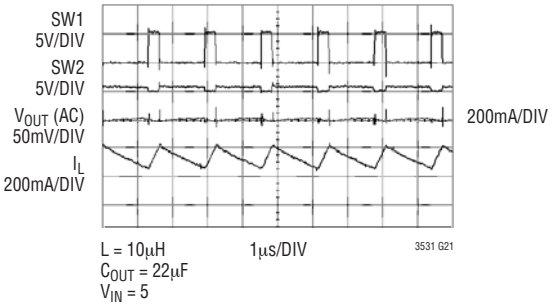


**Start-Up into 50mA Load at 3.3 $V_{OUT}$ (Shows Start, Buck, Then 4sw Modes)**

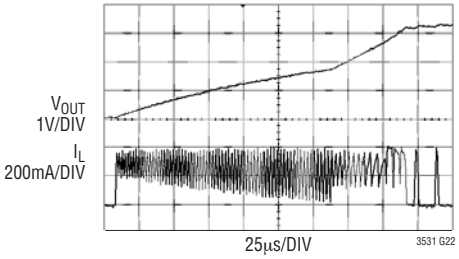


**3.6$V_{IN}$, 3.3$V_{OUT}$ Load Step 200mA to 80mA**

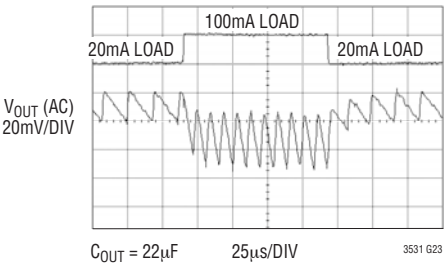


**SW1 and SW2 Close-Up in Four Switch Mode**

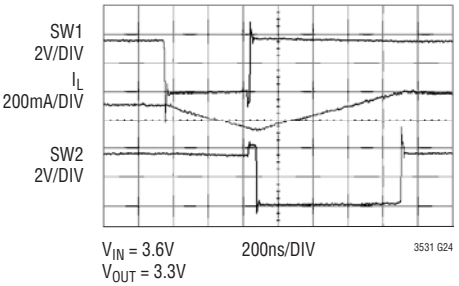

## PIN FUNCTIONS ThinSOT/DFN Packages

**SW2 (Pin 1/Pin 7):** Buck-Boost Switch Pin Where Internal Switches C and D are Connected. An optional Schottky diode can be connected from SW2 to $V_{OUT}$ for a moderate efficiency improvement. Minimize trace length to keep EMI down.

**GND (Pin 2/Pin 3):** Signal Ground for the IC.

**PGND (Pin 2/Pin 8):** Power Ground for the IC. (Shared on ThinSOT version)

**$V_{OUT}$ (Pin 3/Pin 6):** Output of the Buck-Boost Synchronous Rectifier. A filter capacitor is placed from $V_{OUT}$ to GND. A ceramic bypass capacitor is recommended as close to the $V_{OUT}$ and GND pins as possible.

**$\overline{\text{SHDN}}$ (Pin 4/Pin 4):** External Shutdown Pin. An applied voltage of < 0.4V shuts down the converter. A voltage above >1.4V will enable the converter.

**$V_{IN}$ (Pin 5/Pin 2):** Input Supply Pin for the Buck-Boost Converter. A minimum 2.2µF Ceramic Capacitor should be placed between $V_{IN}$ and GND.

**FB (NA/Pin 5):** Feedback Pin for the Adjustable Version. Connect the resistor divider tap here. The output voltage can be adjusted from 2V to 5V.

$$V_{OUT} = 1.225\left(1+\frac{R2}{R1}\right)$$

**SW1 (Pin 6/Pin 1):** Buck-Boost Switch Pin Where Internal Switches A and B are Connected. Connect the inductor from SW1 to SW2.

**Exposed Pad (Pin 9, DFN):** Solder to PCB ground for optimal thermal performance.

## BLOCK DIAGRAM

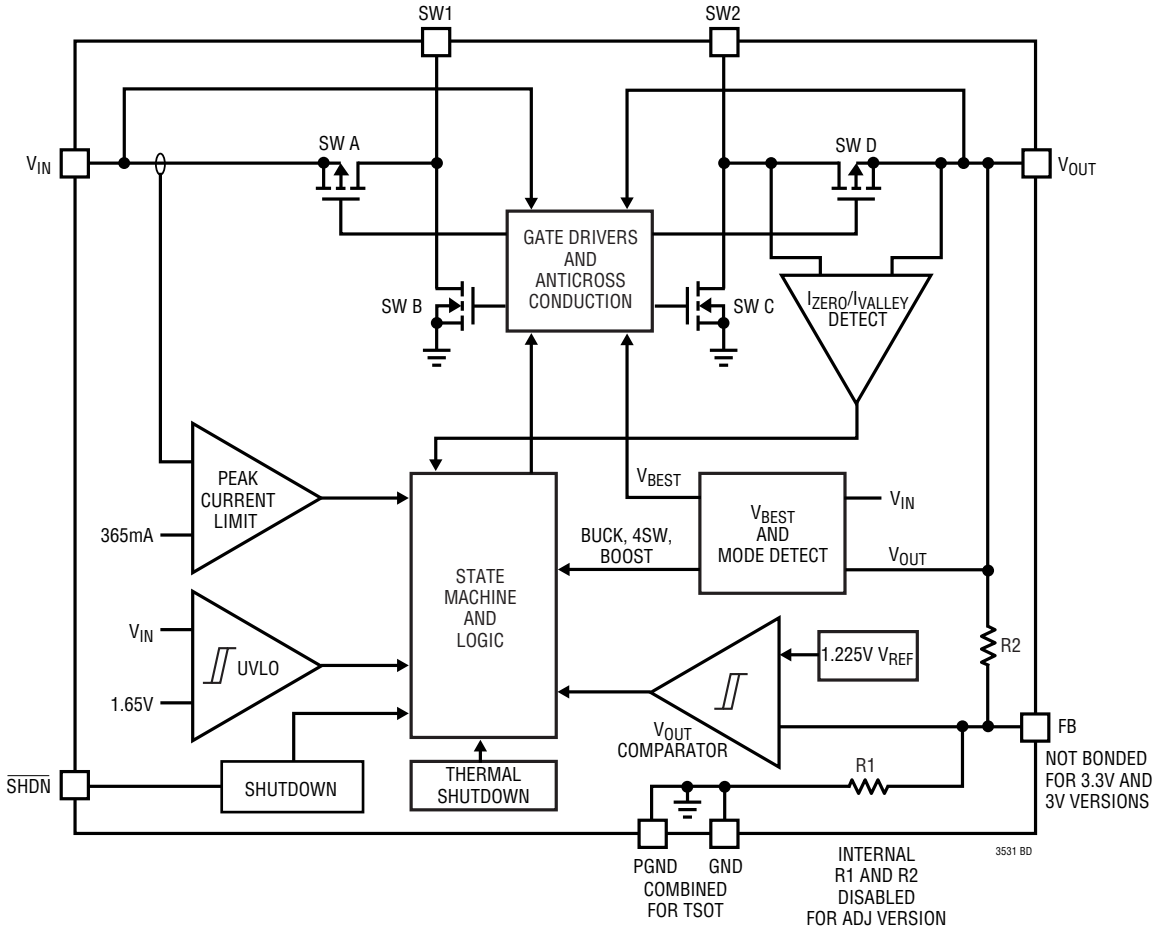

## OPERATION

The LTC3531, LTC3531-3.3 and LTC3531-3 synchronous buck-boost converters utilize a Burst Mode control technique to achieve high efficiency over a wide dynamic range of load currents. A 2% accurate comparator is used to monitor the output voltage. If $V_{OUT}$ is above its programmed reference threshold no switching occurs and only quiescent current is drawn from the power source (sleep mode). When $V_{OUT}$ drops below the reference threshold the IC "wakes up", switching commences, and the output capacitor is charged. The value of the output capacitor, the load current, and the comparator hysteresis (~1%) determines the number of current pulses required to pump-up the output capacitor before the part returns to sleep.

In order to determine the best operating mode for the converter, the LTC3531 contains a second comparator that monitors the relative voltage difference between $V_{IN}$ and $V_{OUT}$. Input and output voltages in the various modes as well as typical inductor currents are shown in Figure 1. Regions of the current waveforms where switches A and D are on provide the highest efficiency since energy is transferred directly from the input source to the output.

### Boost Mode

If $V_{IN}$ is ~400mV below $V_{OUT}$, the LTC3531 operates in boost or step-up mode. Referring to Figure 1 (left side) when $V_{OUT}$ falls below its regulation voltage, switches A and C are turned on ($V_{IN}$ is applied across the inductor) and current is ramped until $I_{PEAK}$ is detected. When this occurs, C is turned off, D is turned on and current is delivered to the output capacitor ($V_{IN} – V_{OUT}$ is applied across the inductor). Inductor current falls when D is on, until an $I_{VALLEY}$ is detected. Terminating at $I_{VALLEY}$, rather than $I_{ZERO}$, results in an increased load current capability for a given peak current. This AC then AD switch sequence is repeated until the output is pumped above its regulation voltage, a final $I_{ZERO}$ is detected, and the part returns to sleep mode ($I_{VALLEY}$ is ignored and $I_{ZERO}$ is used in all modes once $V_{OUT}$ is above its programmed value).

### 4-Switch Mode

If ($V_{OUT}$ – 400mV) < ~$V_{IN}$ < ($V_{OUT}$ + 800mV), the LTC3531 operates in 4-switch step-up/down mode. Returning to Figure 1 (center) when $V_{OUT}$ falls below its regulation voltage, switches A and C are turned on and current is ramped until $I_{PEAK}$ is detected. As with Boost Mode operation, C is then turned off, D is turned on and current is delivered to the output. When A and D are on, the inductor current slope is dependant on the relationship between $V_{IN}$, $V_{OUT}$, and the $R_{DSON}$ of the switches. In 4-switch mode, a $t_{OFF}$ timer (approximately 3µs) is used to terminate the AD pulse. Once the $t_{OFF}$ timer expires, switch A is turned off, B is turned on and inductor current is ramped down ($V_{OUT}$ is applied across the inductor) until $I_{VALLEY}$ is detected. This sequence is repeated until the output is regulated, BD switches are turned on, and a final $I_{ZERO}$ is detected. Anticross conduction circuitry in all modes ensures the P-channel MOSFET and N-channel MOSFET switch pairs (A and B or D and C) are never turned on simultaneously.

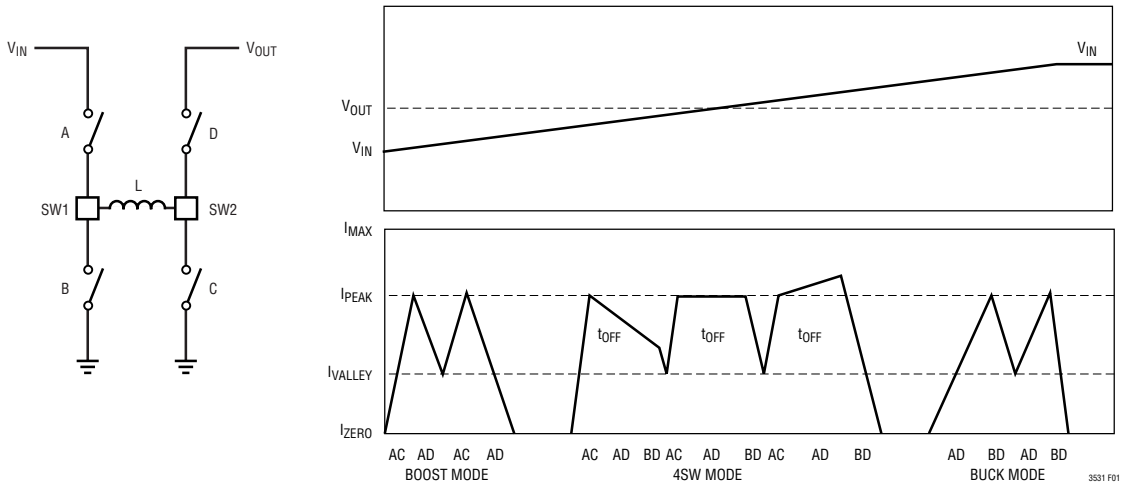


**Figure 1. Voltage and Current Waveforms**

## OPERATION

### Buck Mode

If $V_{IN}$ is ~800mV above $V_{OUT}$, the LTC3531 operates in buck or step-down mode. The higher offset between $V_{IN}$ and $V_{OUT}$ (800mV) is required to ensure sufficient magnetizing voltage across the inductor when the $R_{DSONS}$ are taken into account. At the beginning of a buck mode cycle (Figure 1 right side) switches A and D are turned on ($V_{IN} – V_{OUT}$ is applied across the inductor), current is delivered to the output and ramped up until $I_{PEAK}$ is detected. When this occurs, A is turned off, B is turned on and inductor current falls ($–V_{OUT}$ across the inductor) until an $I_{VALLEY}$ is detected. This AD then BD switch sequence is repeated until the output is pumped above its regulation voltage, a final $I_{ZERO}$ is detected, and the part returns to sleep mode.

### Start-Up Mode

Before $V_{OUT}$ reaches approximately 1.6V, the D switch is disabled and its body diode is used to transfer current to the output capacitor. In start-up mode, the $I_{VALLEY}/I_{ZERO}$ sense circuit is disabled and an alternate algorithm is used to control inductor current. When the LTC3531 is brought out of shutdown (assuming $V_{OUT}$ is discharged) switches A and C are turned on until the inductor current reaches $I_{PEAK}$. The AC switches are then turned off and inductor current flows to the output through the B switch and D body diode. The period for the B switch/D body diode is controlled by the $t_{OFF}$ timer to ~800nS. This sequence of AC switch-on to $I_{PEAK}$ then B switch and D body diode for ~800ns is repeated until $V_{OUT}$ reaches ~1.6V. Once this threshold is reached, the LTC3531 will transfer through the required modes until $V_{OUT}$ is brought into regulation.

Due to propagation delays in the sense circuitry, the magnitudes of the $I_{PEAK}$, $I_{VALLEY}$, and $I_{ZERO}$ currents may shift depending on $V_{IN}$, $V_{OUT}$ and operating mode.

### OTHER LTC3531 FEATURES

**Shutdown:** The part is shut down by pulling $\overline{SHDN}$ below 0.4V, and made active by pulling the pin up to $V_{IN}$ or $V_{OUT}$. Note that $\overline{SHDN}$ an be driven above $V_{IN}$ or $V_{OUT}$, as long as it is limited to less than 6V.

**Output Disconnect and Inrush Limiting:** The LTC3531 is designed to allow true output disconnect by opening both P-channel MOSFET rectifiers. This allows $V_{OUT}$ to go to zero volts during shutdown, drawing no current from the input source. It also provides inrush current limiting at turn-on, minimizing surge currents seen by the input supply.

**Thermal Shutdown:** If the die temperature reaches approximately 150°C, the part will go into thermal shutdown and all switches will be turned off. The part will be enabled again when the die temperature has dropped by 10°C (nominal). To deliver the power that the LTC3531 is capable of, it is imperative that a good thermal path be provided to dissipate the heat generated within the package. It is recommended that multiple vias in the printed circuit board be used to conduct heat away from the IC and into a copper plane with as much area as possible. Soldering the Exposed Pad to the GND plane (DFN version) is recommended to improve thermal performance.

# APPLICATIONS INFORMATION

## Component Selection

Only three power components are required to complete the design of the buck-boost converter, $V_{OUT}$ programming resistors are needed for the adjustable version. The high operating frequency and low peak currents of the LTC3531 allow the use of low value, low profile inductors and tiny external ceramic capacitors.

## Inductor Selection

For best efficiency, choose an inductor with high frequency core material, such as ferrite, to reduce core loses. The inductor should have low DCR (DC resistance) to reduce the $I^2R$ losses, and must be able to handle the peak inductor current without saturating. A 10µH to 22µH inductor value with a >500mA current rating and <400mΩ DCR is recommended. For applications where radiated noise is a concern, a toroidal or shielded inductor can be used. Table 2 contains a list of inductor manufacturers.

## Capacitor Selection

The buck-boost convertor requires two capacitors. Ceramic X5R types will minimize ESL and ESR while maintaining capacitance at rated voltage over temperature. The $V_{IN}$ capacitor should be at least 2.2µF. The $V_{OUT}$ capacitor should be between 4.7µF and 22µF. A larger output capacitor should be used if lower peak to peak output voltage ripple is desired. A larger output capacitor will also improve load regulation on $V_{OUT}$. See Table 3 for a list of capacitor manufacturers for input and output capacitor selection.

**Table 2. Inductor Vendor Information**

| Supplier | Series | Phone | Website |
|---|---|---|---|
| COEV | DN4835 | (800) 227-7040 | www.coev.net |
| Coilcraft | MSS4020<br>LPO3310<br>DS1608 | (847) 639-6400 | www.coilcraft.com |
| Murata | LQH43CN<br>LQH32CN | USA: (814) 237-1431<br>(800) 831-9172 | www.murata.com |
| Sumida | CDRH4D18<br>CDRH3D16/HP | USA: (847) 956-0666<br>Japan: 81-3-3607-5111 | www.sumida.com |
| Toko | D312C<br>D412C<br>DB320C | (847) 297-0070 | www.tokoam.com |

**Table 3. Capacitor Vendor Information**

| Supplier | Series | Phone | Website |
|---|---|---|---|
| AVX | X5R | (803) 448-9411 | www.avxcorp.com |
| Murata | X5R | USA: (814) 237-1431<br>(800) 831-9172 | www.murata.com |
| Sanyo | POSCAP | (619) 661-6322 | www.sanyovideo.com |
| Taiyo Yuden | X5R | (408) 573-4150 | www.taiyo-yuden.com |
| TDK | X5R | (847) 803-6100 | www.component.tdk.com |

## APPLICATIONS INFORMATION

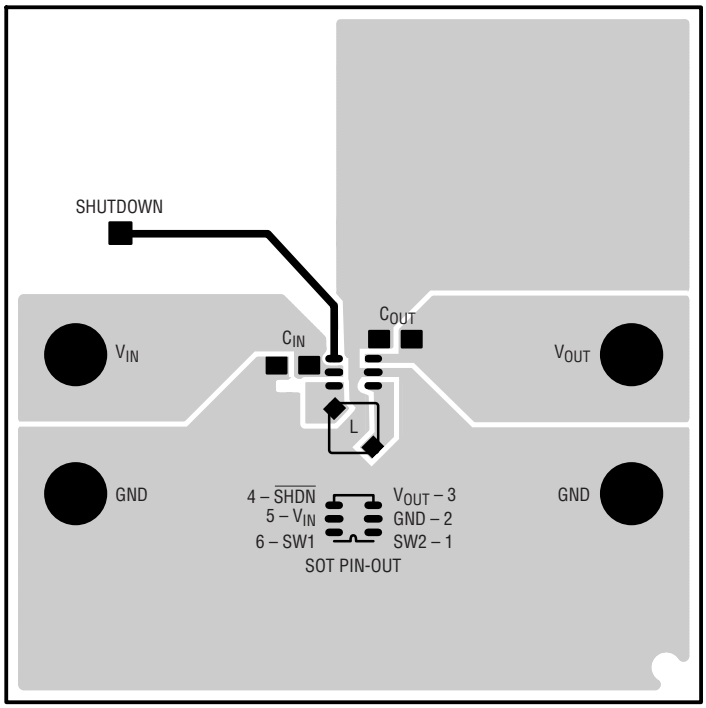


**Recommended Layout (SOT Versions)**

## TYPICAL APPLICATION

**5V/Li-Ion to 3.3V with ThinSOT (3.3V Version)**

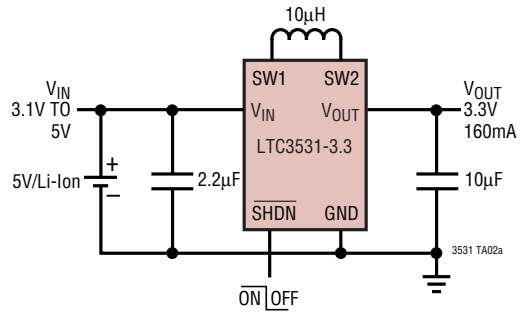


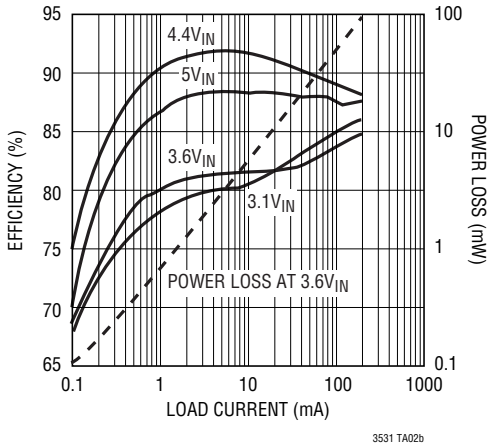


**2 AA Alkaline to 3V with ThinSOT (3V Version)**

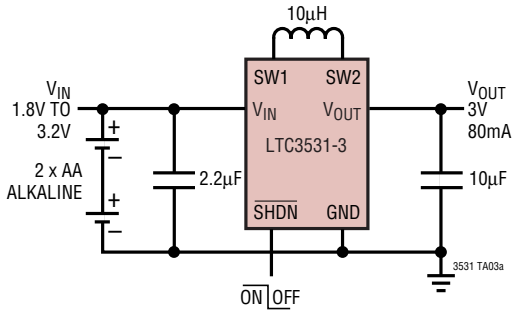


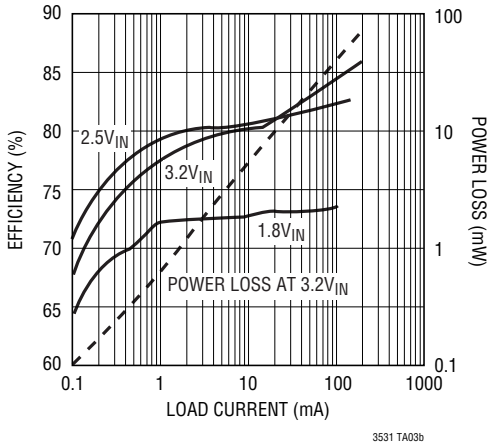


**USB to 5V with 3 × 3 DFN (Adjustable Version)**

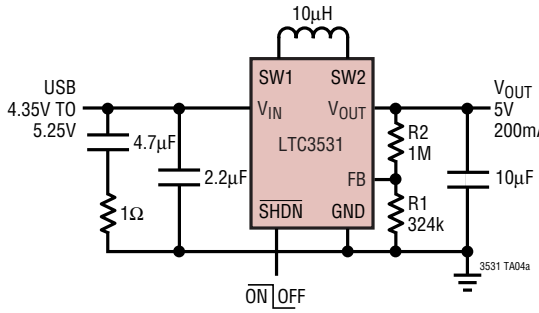


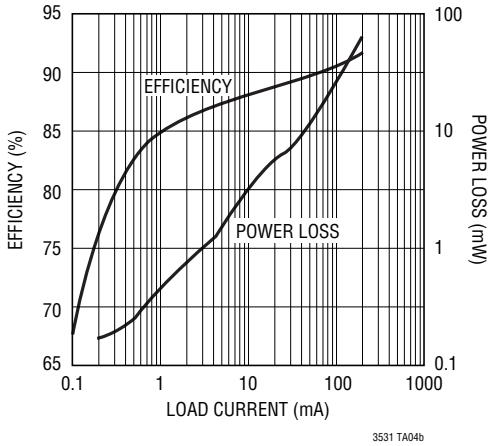

# PACKAGE DESCRIPTION

**S6 Package**
**6-Lead Plastic TSOT-23**
(Reference LTC DWG # 05-08-1636)

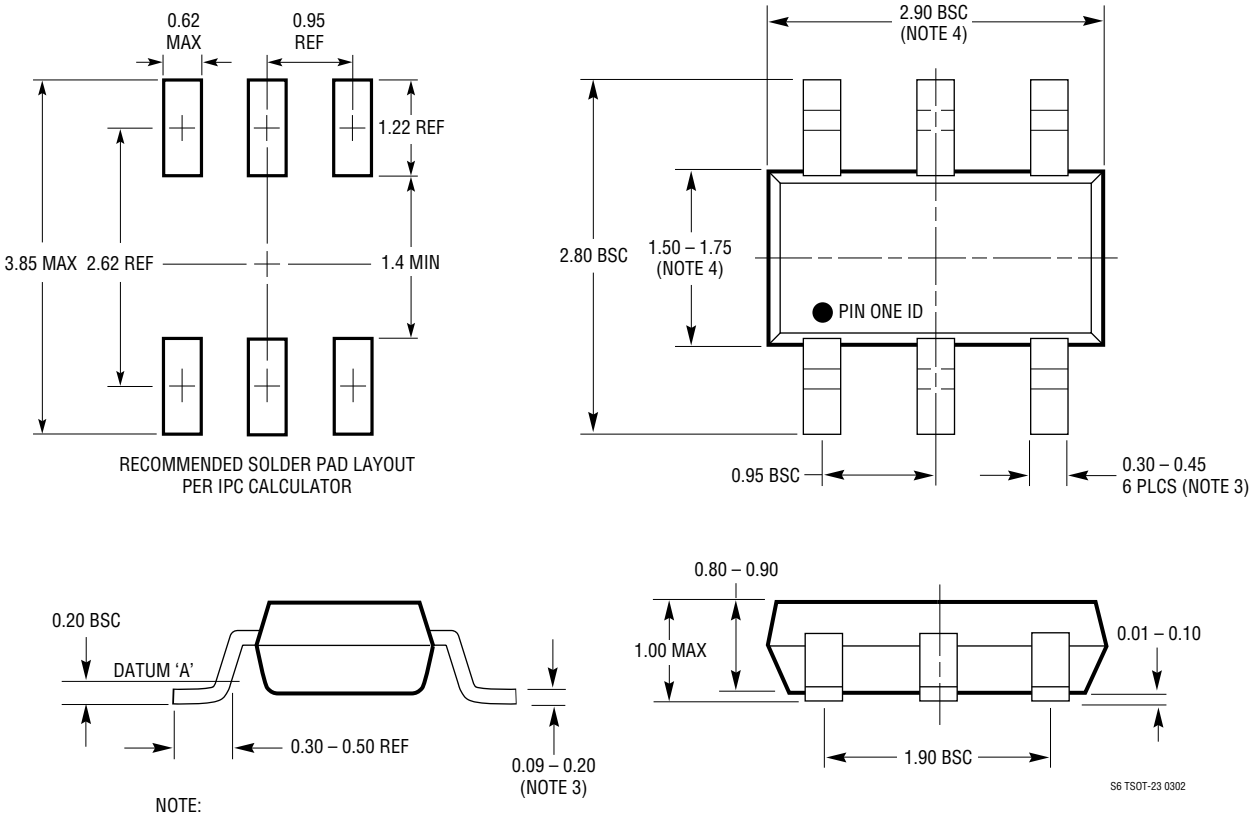


NOTE:
1. DIMENSIONS ARE IN MILLIMETERS
2. DRAWING NOT TO SCALE
3. DIMENSIONS ARE INCLUSIVE OF PLATING
4. DIMENSIONS ARE EXCLUSIVE OF MOLD FLASH AND METAL BURR
5. MOLD FLASH SHALL NOT EXCEED 0.254mm
6. JEDEC PACKAGE REFERENCE IS MO-193

# PACKAGE DESCRIPTION

**DD Package**
**8-Lead Plastic DFN (3mm × 3mm)**
(Reference LTC DWG # 05-08-1698)

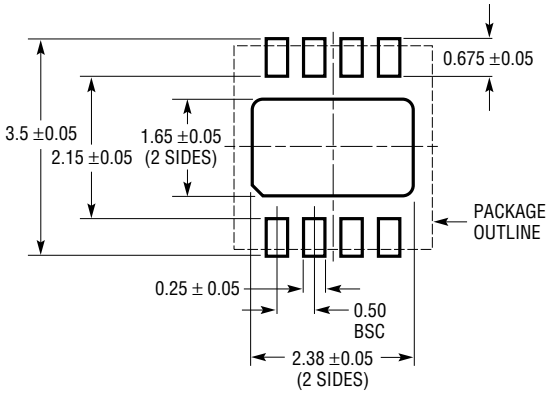


RECOMMENDED SOLDER PAD PITCH AND DIMENSIONS

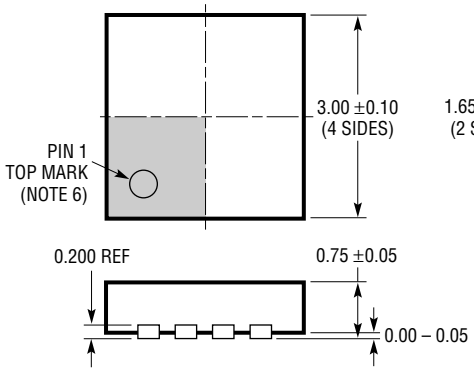


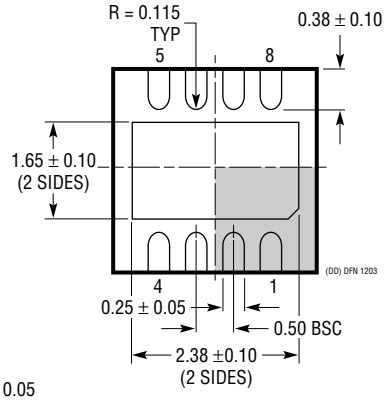


BOTTOM VIEW—EXPOSED PAD

NOTE:
1. DRAWING TO BE MADE A JEDEC PACKAGE OUTLINE M0-229 VARIATION OF (WEED-1)
2. DRAWING NOT TO SCALE
3. ALL DIMENSIONS ARE IN MILLIMETERS
4. DIMENSIONS OF EXPOSED PAD ON BOTTOM OF PACKAGE DO NOT INCLUDE MOLD FLASH. MOLD FLASH, IF PRESENT, SHALL NOT EXCEED 0.15mm ON ANY SIDE
5. EXPOSED PAD SHALL BE SOLDER PLATED
6. SHADED AREA IS ONLY A REFERENCE FOR PIN 1 LOCATION ON TOP AND BOTTOM OF PACKAGE



Information furnished by Linear Technology Corporation is believed to be accurate and reliable. However, no responsibility is assumed for its use. Linear Technology Corporation makes no representation that the interconnection of its circuits as described herein will not infringe on existing patent rights.

## TYPICAL APPLICATION

**Complete USB/Li-Ion Powered System with 3.3$V_{OUT}$ and Linear Charger**

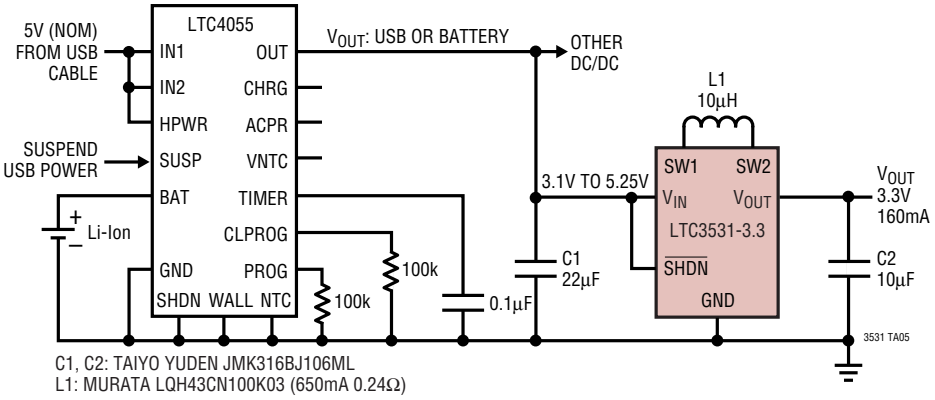


## RELATED PARTS

| PART NUMBER | DESCRIPTION | COMMENTS |
|---|---|---|
| LT1930/LT1930A | 1A ($I_{SW}$), 1.2MHz/2.2MHz, High Efficiency Step-Up DC/DC Converter | $V_{IN}$: 2.6V to 16V, $V_{OUT(MAX)}$ = 34V, $I_Q$ = 4.2mA/5.5mA, $I_{SD}$ < 1µA, ThinSOT Package |
| LTC3400/LTC3400B | 600mA ($I_{SW}$), 1.2MHz Synchronous Step-Up DC/DC Converter | $V_{IN}$: 0.85V to 5V, $V_{OUT(MAX)}$ = 5V, $I_Q$ = 19µA/300µA, $I_{SD}$ < 1µA, ThinSOT Package |
| LTC3401/LTC3402 | 1A/2A ($I_{SW}$), 3MHz Synchronous Step-Up DC/DC Converter | $V_{IN}$: 0.5V to 5V, $V_{OUT(MAX)}$ = 6V, $I_Q$ = 38µA, $I_{SD}$ < 1µA, MS Package |
| LTC3405/LTC3405A | 300mA ($I_{OUT}$), 1.5MHz Synchronous Step-Down DC/DC Converter | $V_{IN}$: 2.7V to 6V, $V_{OUT(MIN)}$ = 0.8V, $I_Q$ = 20µA, $I_{SD}$ ≤ 1µA, MS10 Package |
| LTC3406/LTC3406B | 600mA ($I_{OUT}$), 1.5MHz Synchronous Step-Down DC/DC Converter | $V_{IN}$: 2.5V to 5.5V, $V_{OUT(MIN)}$ = 0.6V, $I_Q$ = 20µA, $I_{SD}$ ≤ 1µA, ThinSOT Package |
| LTC3421 | 3A ($I_{SW}$), 3MHz Synchronous Step-Up DC/DC Converter | $V_{IN}$: 0.5V to 4.5V, $V_{OUT(MAX)}$ = 5.25V, $I_Q$ = 12µA, $I_{SD}$ < 1µA, QFN Package |
| LTC3422 | 1.5A ($I_{SW}$), 3MHz Synchronous Step-Up DC/DC Converter | $V_{IN}$: 0.5V to 4.5V, $V_{OUT(MAX)}$ = 5.25V, $I_Q$ = 25µA, $I_{SD}$ < 1µA, 3mm × 3mm DFN Package |
| LTC3426 | 2A ($I_{SW}$), 1.2MHz Step-Up DC/DC Converter in SOT-23 | $V_{IN}$: 1.6V to 5V, $V_{OUT}$ up to 5.5V |
| LTC3428 | 4A ($I_{SW}$), 1.2MHz Step-Up DC/DC Converter | $V_{IN}$: 1.6V to 5V, $V_{OUT}$ up to 5.5V |
| LTC3429 | 600mA ($I_{SW}$), 500kHz Synchronous Step-Up DC/DC Converter | $V_{IN}$: 0.5V to 4.4V, $V_{OUT(MIN)}$ = 5V, $I_Q$ = 20µA, $I_{SD}$ < 1µA, QFN Package |
| LTC3440 | 600mA ($I_{OUT}$), 2MHz Synchronous Buck-Boost DC/DC Converter | $V_{IN}$: 2.5V to 5.5V, $V_{OUT(MIN)}$ = 5.5V, $I_Q$ = 25µA, $I_{SD}$ < 1µA, MS, DFN Packages |
| LTC3441 | 600mA ($I_{OUT}$), 2MHz Synchronous Buck-Boost DC/DC Converter | $V_{IN}$: 2.5V to 5.5V, $V_{OUT(MIN)}$ = 5.5V, $I_Q$ = 25µA, $I_{SD}$ < 1µA, DFN Package |
| LTC3442 | 2MHz Synchronous Buck-Boost with Auto-Burst | $V_{IN}$: 2.4V to 5.5V, $V_{OUT}$ up to 5.25V |
| LTC3443 | 1.2A ($I_{OUT}$), 600kHz Synchronous Buck-Boost DC/DC Converter | $V_{IN}$: 2.4V to 5.5V, $V_{OUT(MIN)}$ = 5.25V, $I_Q$ = 28µA, $I_{SD}$ < 1µA, MS Package |
| LTC3458 | 1.4A, 1.5MHz Synchronous Step-Up DC/DC Converter | $V_{IN}$: 1.5V to 6V, $V_{OUT}$ up to 7.5V |
| LTC3458L | 1.7A, 1.5MHz Synchronous Step-Up DC/DC Converter | $V_{IN}$: 1.5V to 6V, $V_{OUT}$ up to 6V |
| LTC3459 | 10V Micropower Synchronous Step-Up DC/DC Converter | $V_{IN}$: 1.5V to 5.5V, $V_{OUT}$ up to 10V |
| LTC3525/LTC3525-3.3/ LTC3525-5 | 400mA ($I_{SW}$), Synchronous Step-Up DC/DC Converter with Output Disconnect | $V_{IN}$: 0.5V to 4.5V, $I_Q$ = 7µA, $I_{SD}$ < 1µA, 2mm × 2mm SC70 Package |




Linear Technology Corporation
1630 McCarthy Blvd., Milpitas, CA 95035-7417
(408) 432-1900 • FAX: (408) 434-0507 • www.linear.com

LT 0807 REV B • PRINTED IN USA

© LINEAR TECHNOLOGY CORPORATION 2006