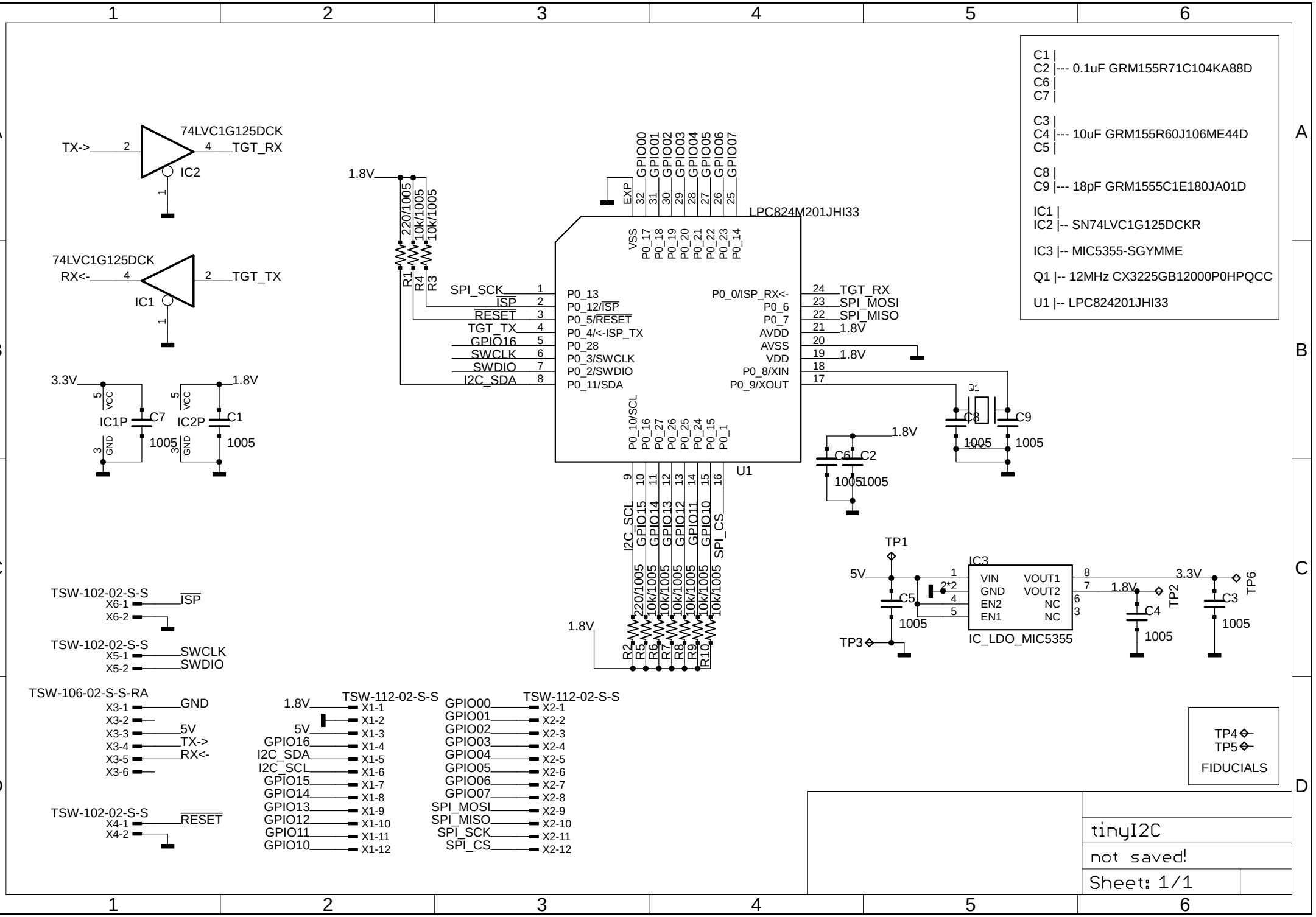
C1 |
C2 |--- 0.1uF GRM155R71C104KA88D
C6 |
C7 |
C3 |
C4 |--- 10uF GRM155R60J106ME44D
C5 |
C8 |
C9 |--- 18pF GRM1555C1E180JA01D
IC1 |
IC2 |-- SN74LVC1G125DCKR
IC3 |-- MIC5355-SGYMME
Q1 |-- 12MHz CX3225GB12000P0HPQCC
U1 |-- LPC824201JHI33
74LVC1G125DCK
TX->
TGT_RX
IC2
74LVC1G125DCK
RX<-
TGT_TX
IC1
3.3V
1.8V
IC1P
C7
IC2P
C1
1005
LPC824M201JHI33
U1
SPI_SCK
ISP
RESET
TGT_TX
GPIO16
SWCLK
SWDIO
I2C_SDA
TGT_RX
SPI_MOSI
SPI_MISO
1.8V
Q1
C8
C9
C6
C2
TP1
5V
IC3
VIN
GND
EN2
EN1
VOUT1
VOUT2
NC
NC
IC_LDO_MIC5355
C5
C4
C3
TP2
TP6
TP3
TSW-102-02-S-S
X6-1
X6-2
ISP
TSW-102-02-S-S
X5-1
X5-2
SWCLK
SWDIO
TSW-106-02-S-S-RA
X3-1
X3-2
X3-3
X3-4
X3-5
X3-6
GND
5V
TX->
RX<-
TSW-102-02-S-S
X4-1
X4-2
RESET
TSW-112-02-S-S
X1-1
X1-2
X1-3
X1-4
X1-5
X1-6
X1-7
X1-8
X1-9
X1-10
X1-11
X1-12
GPIO16
I2C_SDA
I2C_SCL
GPIO15
GPIO14
GPIO13
GPIO12
GPIO11
GPIO10
TSW-112-02-S-S
X2-1
X2-2
X2-3
X2-4
X2-5
X2-6
X2-7
X2-8
X2-9
X2-10
X2-11
X2-12
GPIO00
GPIO01
GPIO02
GPIO03
GPIO04
GPIO05
GPIO06
GPIO07
SPI_MOSI
SPI_MISO
SPI_SCK
SPI_CS
TP4
TP5
FIDUCIALS
tinyI2C
not saved!
Sheet: 1/1