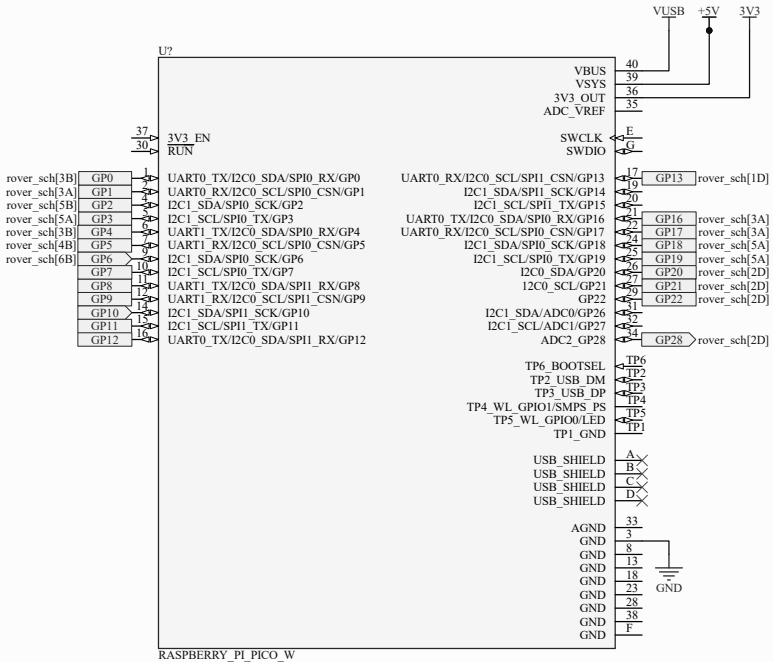

Motors

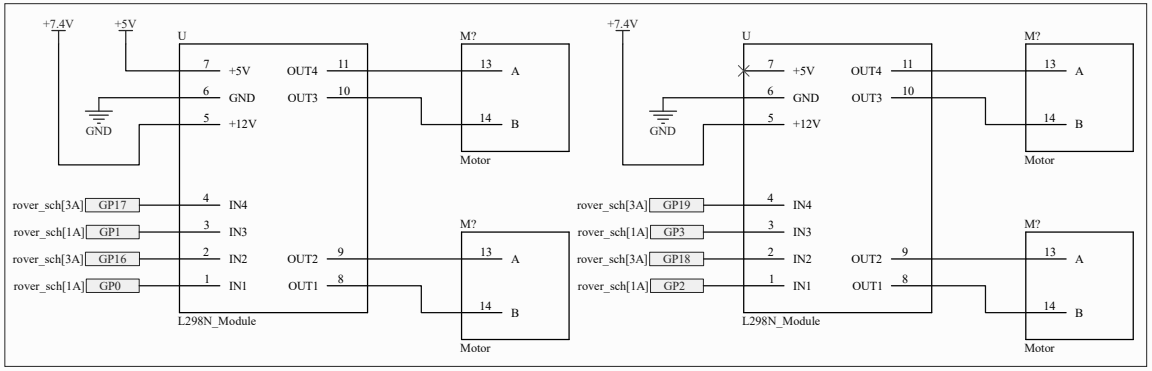

Servos

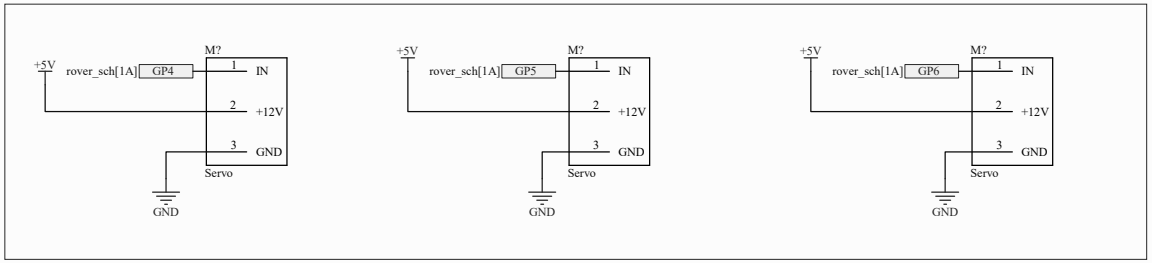

Sensors

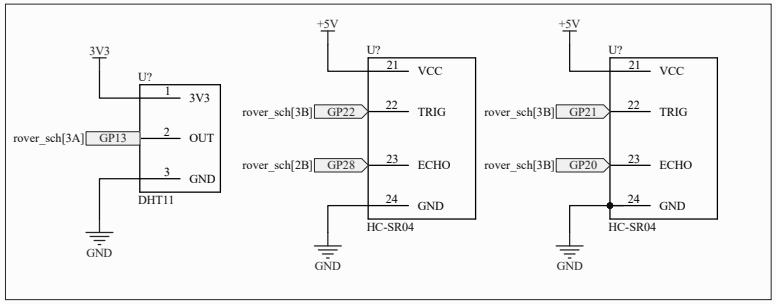

Power

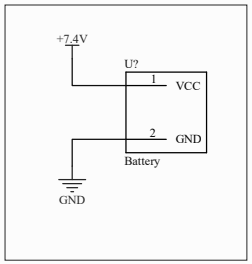

Title: Rover the Moon		
Size: A	Number	Revision
Date: 7/27/2024		Sheet of
File: C:\Users\..\rover_sch.SchDoc		Drawn By: