REVERSE CAR PARKING USING ARDUINO

INTRODUCTION

- In this modern era,parking a car is one of the important skill for drivers as well as car owners as it is very difficult to park in a small space.
- That to Reverse parking in a congested place or in a small space is very difficult.
- To solve this our project proposes to design a simple reverse car parking system to park the car in a safe way without any damage or creating accidents.

PURPOSE OF THE PROJECT

- Help people to park car in reverse direction
- Time-Saving
- Help to avoid collision
- Preventing damage to surroundings.

COMPONENTS

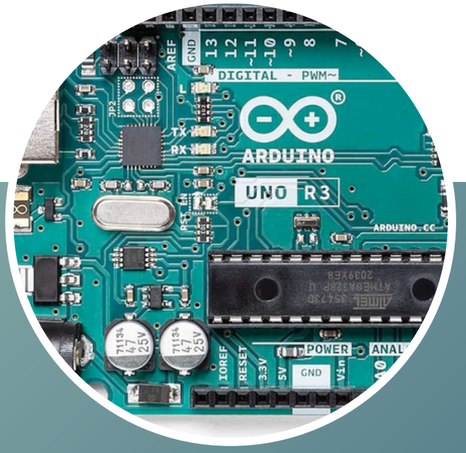

Arduino UNO

jumper wires

Resistor

Ultrasonic Sensor

HC-SR04

Breadboard

LEDs

CIRCUIT DIAGRAM

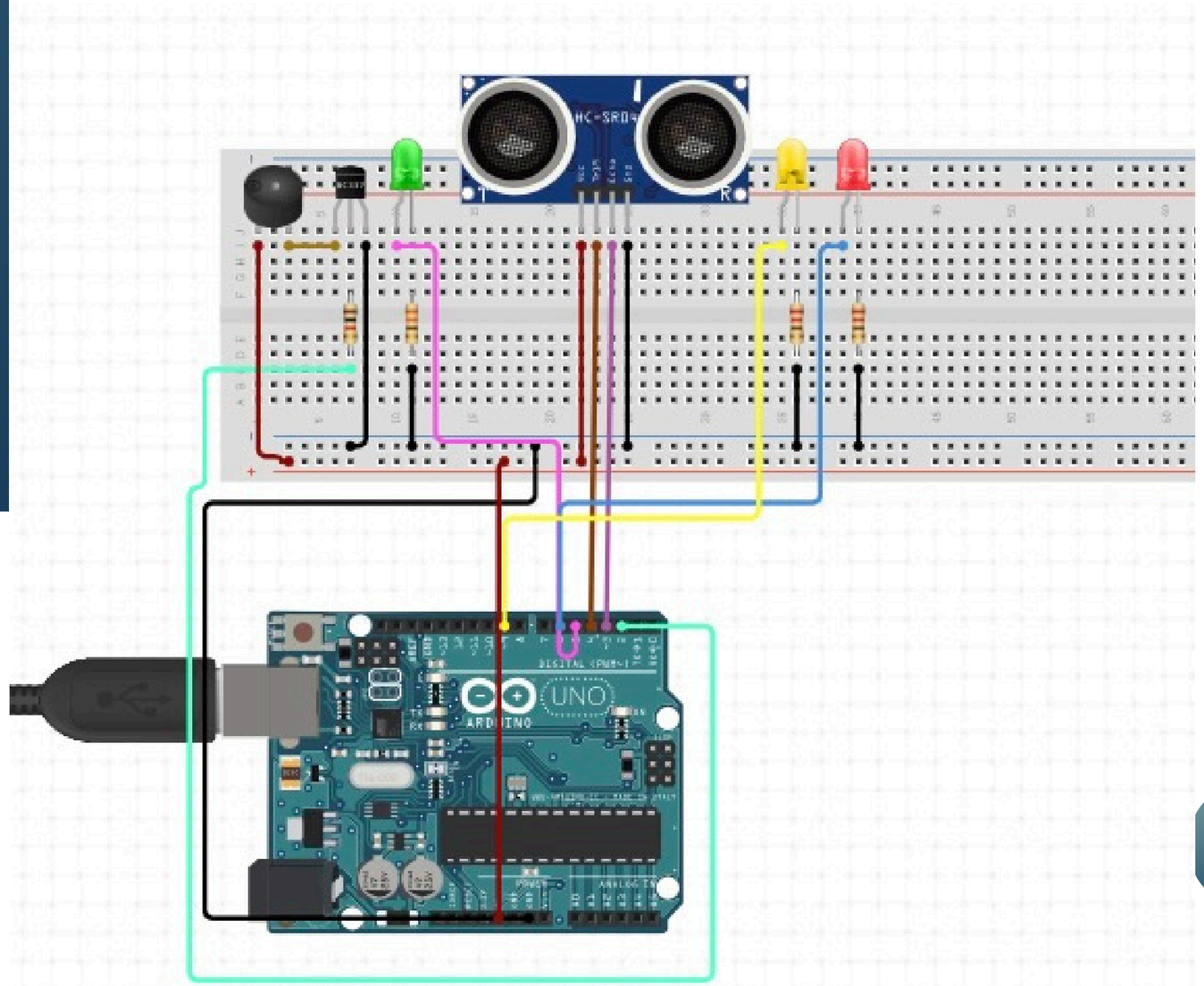

BLOCK DIAGRAM

RESULT

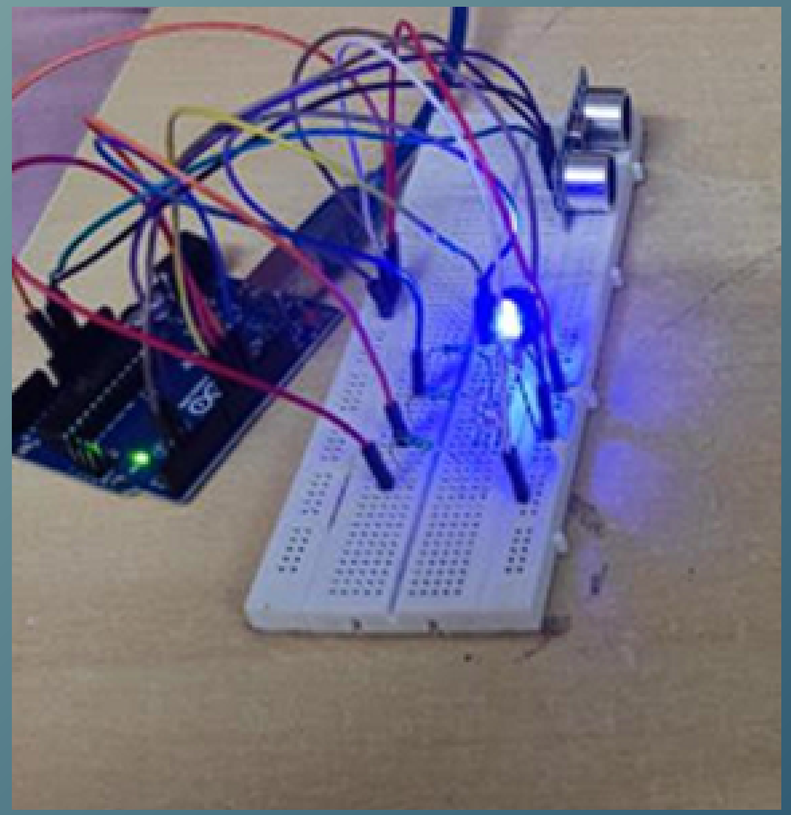

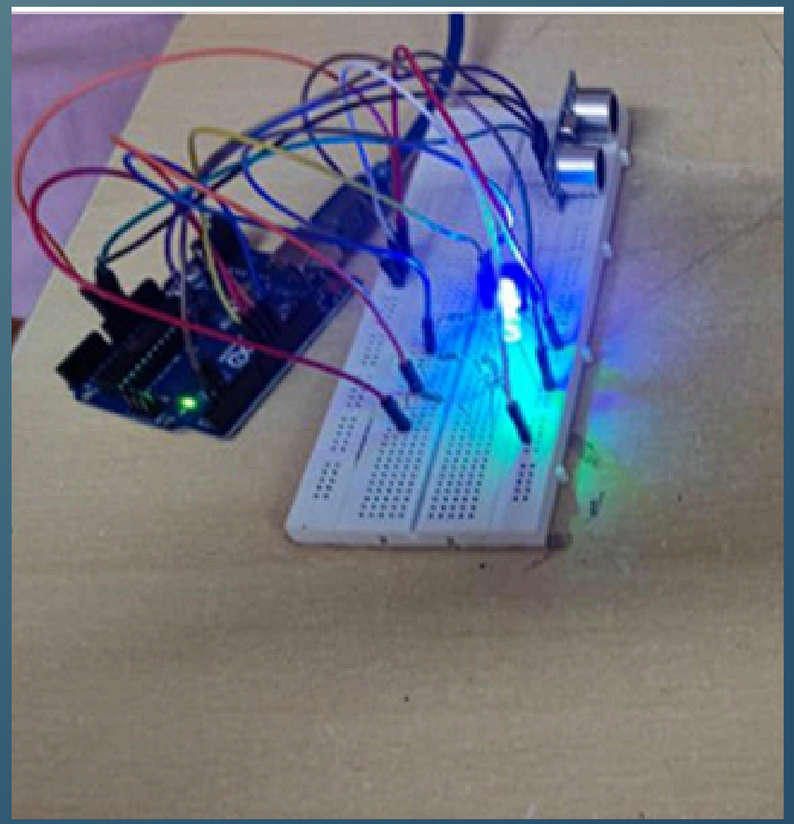

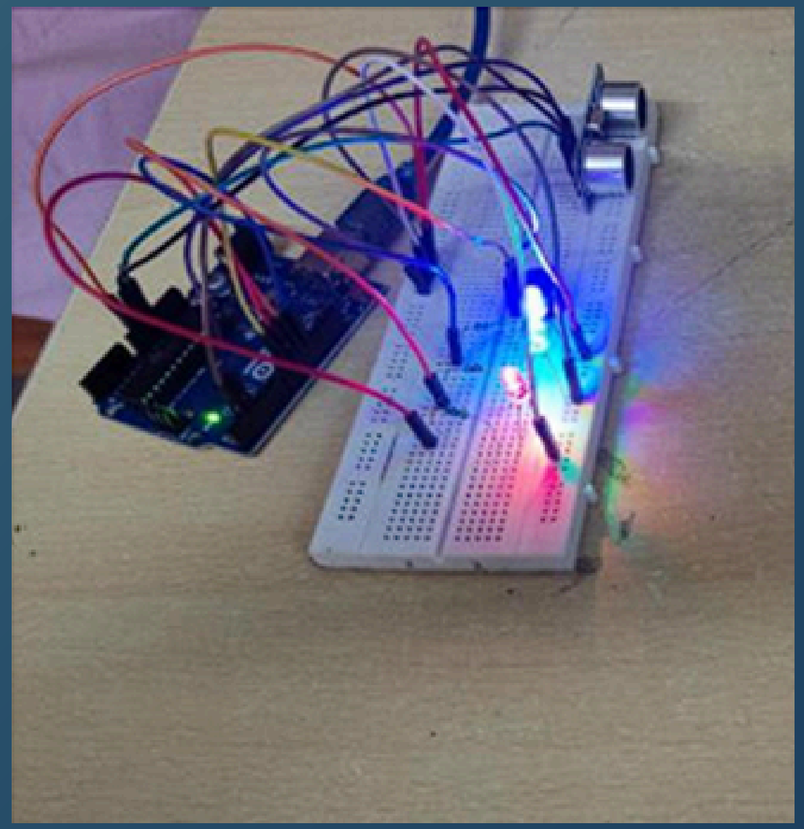

CONCLUSION AND FUTURE ENACHMENTS

- By integrating sensors and advanced algorithms, this system assists drivers in maneuvering their vehicles into parking spaces with greater accuracy and confidence.

- It calculates the distance between the car and the obstacle that can be indicated by using LEDs and Buzzer which provides a safe way to park the vehicles without any damage or accidents.

- In future, It will help to automatically adjust vehicles in the parking area to park and retrieve our vehicle without need of human intervention.

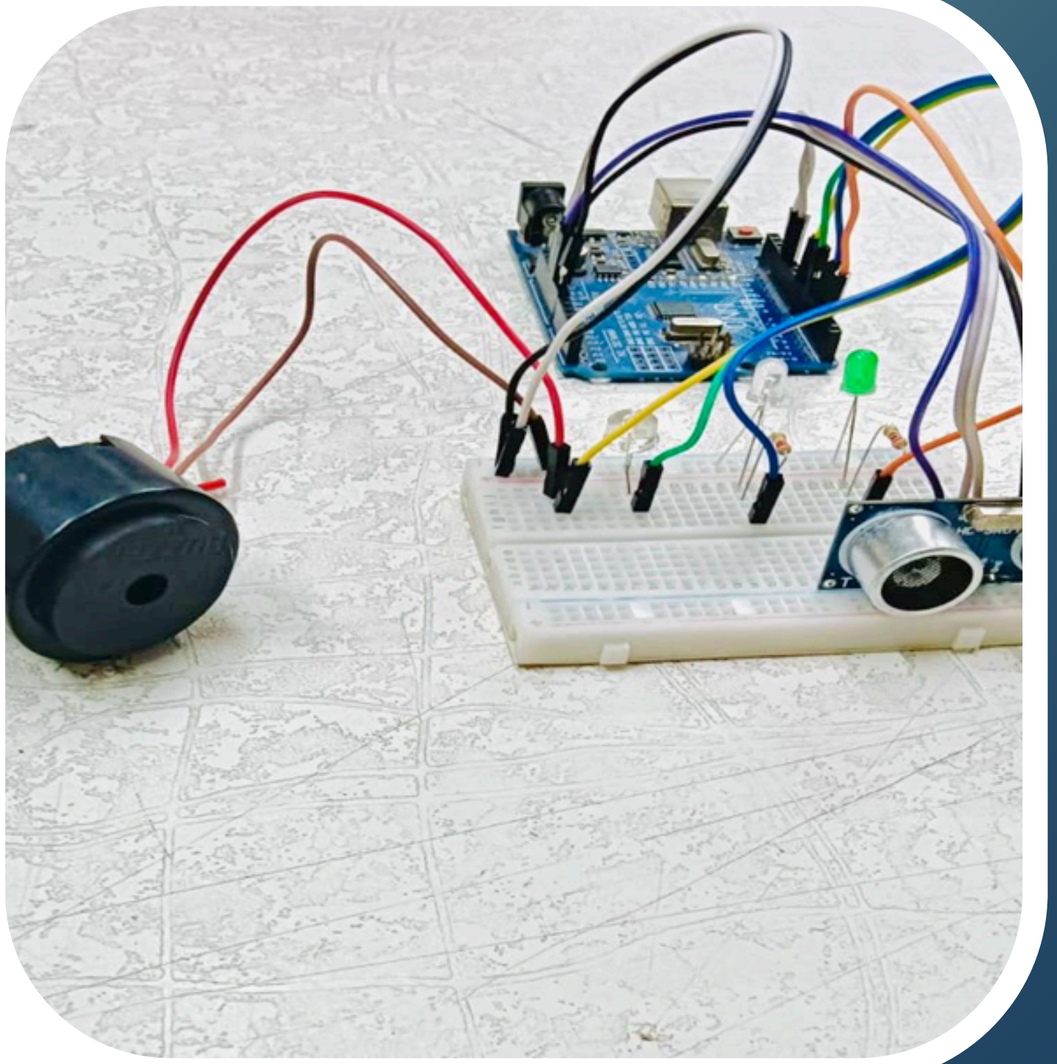

THANK YOU