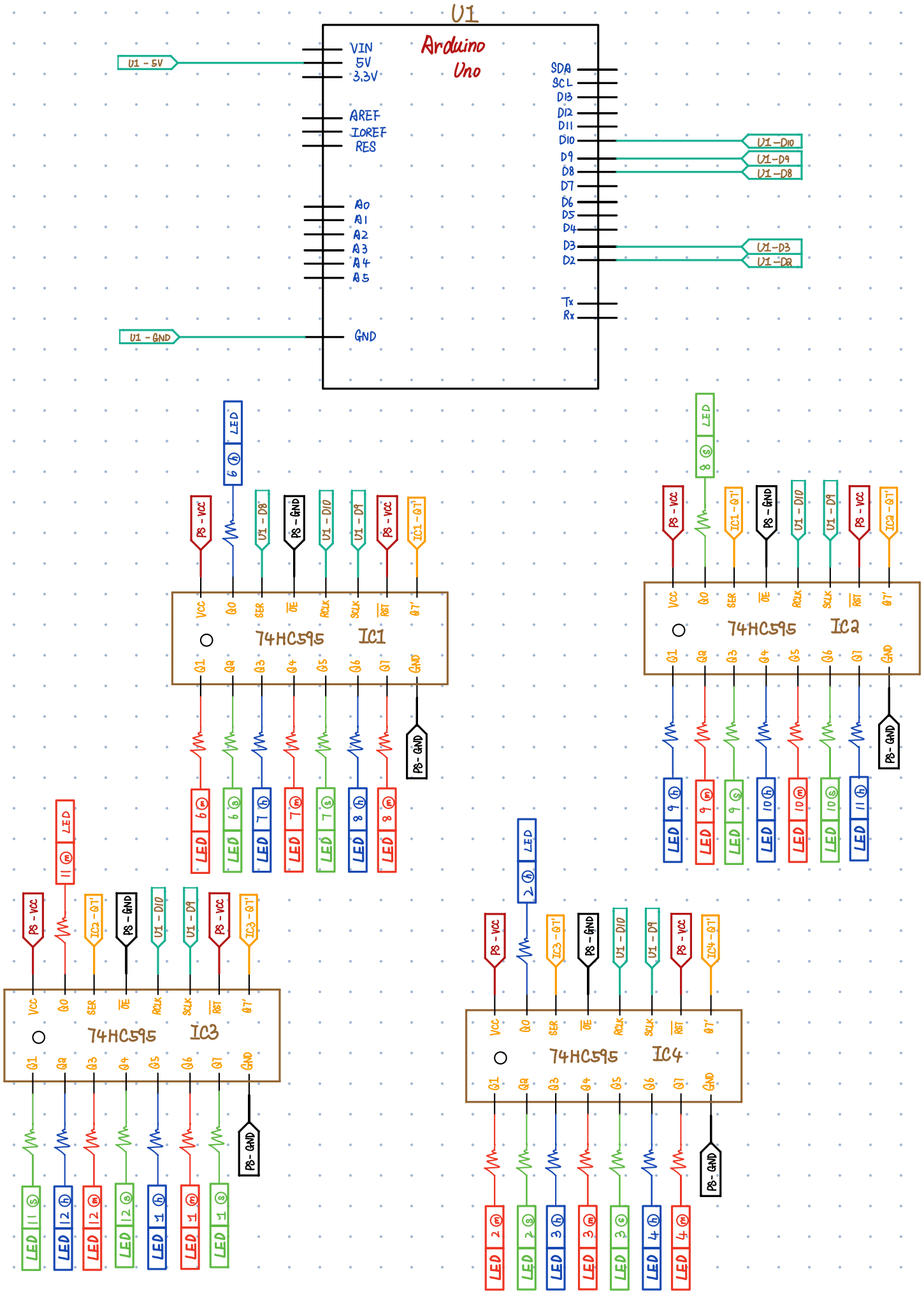
U1
Arduino
Uno
VIN
5V
3.3V
AREF
IOREF
RES
A0
A1
A2
A3
A4
A5
GND
SDA
SCL
D13
D12
D11
D10
D9
D8
D7
D6
D5
D4
D3
D2
Tx
Rx
U1 - 5V
U1 - GND
U1-D10
U1-D9
U1-D8
U1-D3
U1-D2
74HC595
IC1
IC2
IC3
IC4
VCC
QO
SER
OE
RCLK
SCLK
RST
Q7'
Q1
Q2
Q3
Q4
Q5
Q6
Q7
GND
PS - VCC
PS - GND
U1 - D10
U1 - D9
U1 - D8
IC1 - Q7'
IC2 - Q7'
IC3 - Q7'
IC4 - Q7'
LED

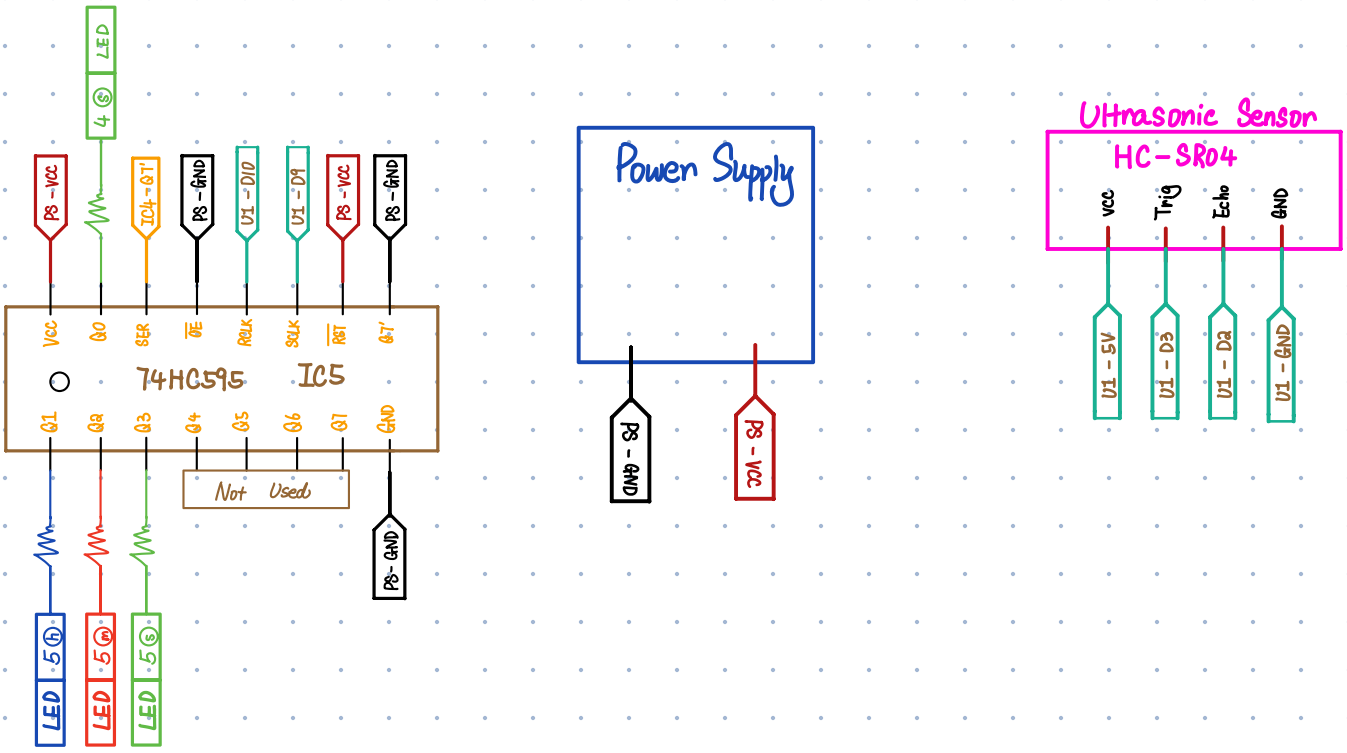
LED
4 s
P8 - VCC
IC4 - Q7'
P8 - GND
U1 - D10
U1 - D9
P8 - VCC
P8 - GND
VCC
Q0
SER
OE
RCLK
SCLK
RST
Q7'
74HC595
IC5
Q1
Q2
Q3
Q4
Q5
Q6
Q7
GND
Not Used
P8 - GND
LED 5 h
LED 5 m
LED 5 s
Power Supply
P8 - GND
P8 - VCC
Ultrasonic Sensor
HC-SR04
VCC
Trig
Echo
GND
U1 - 5V
U1 - D3
U1 - D2
U1 - GND