Correction:
Pins 2, 3 are reveresed on the original schematics
but correct on the physical board.

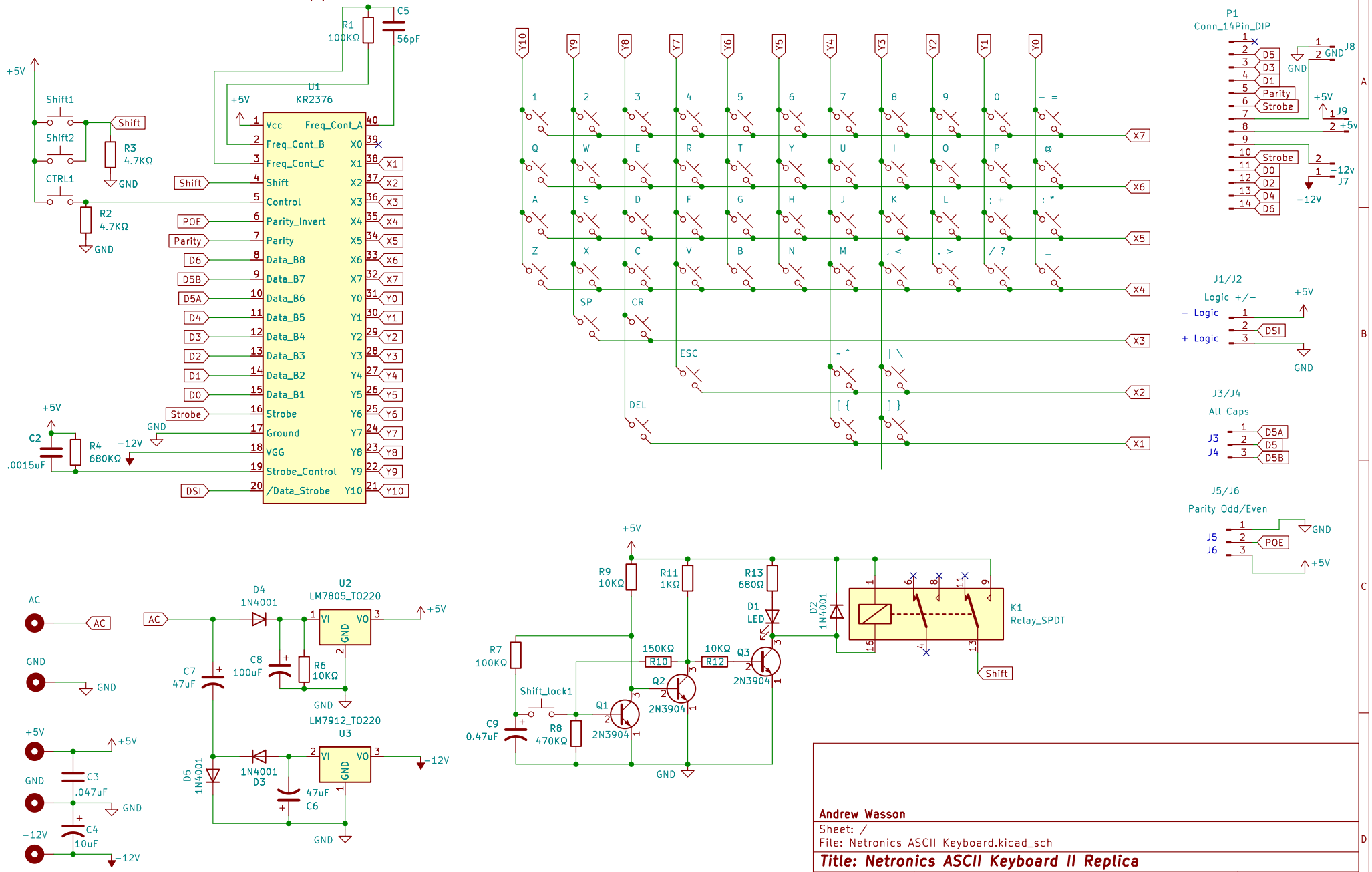

Andrew Wasson

Sheet: /

File: Netronics ASCII Keyboard.kicad_sch

Title: Netronics ASCII Keyboard II Replica

Size: A4	Date: 2024-11-10	Rev: 1
KiCad E.D.A. kicad 7.0.8		Id: 1/1