hansafrique

Hansafrique Trading Company (Pty) Ltd

CATALOGUE - BRAKE COMPONENTS
Agriculture Vehicles

Contact Details

Hansafrique Trading Company (Pty) Ldt South Africa
Brainley No 6 Unit 2, 123 Mosaic Street, Silvertondale, 0184
Postnet Suite 335, Private Bag X 10, Elardus Park, 0047
Tel: +27(0) 12 804 1287 I Tel: +27(0) 12 804 3113 I Fax: +27(0) 86 650 0067
After Hours: Rynier van Rooyen +27(0) 82 572 0039
Email: info@hansafrique.co.za I www.hansafrique.co.za

NB PARTS GmbH
Daimlerstraße 7, D-91301 Forchheim, Germany
Tel. +49 (0) 9191 34 16 0 I Fax +49 (0) 9191 34 16 199
Email: info@nb-parts.de I www.nb-parts.de

© 2018 Hansafrique and NB PARTS GmbH

certified according to ISO 9001
www.tuv-sud.com/ms-cert

Contents

Tractor brake parts 04

04 Bautz
05 Belarus
06 Case IH
19 Case IH (David Brown)
21 Claas
22 Deutz / KHD
45 Deutz Fahr
47 Eicher
51 Fendt
68 Fiat (New Holland)
73 Ford (New Holland)
79 Güldner
81 Hanomag
84 Holder
85 Hürlimann
88 Hürth
89 JCB
90 John Deere
96 Kramer
98 Lamborghini
101 Landini
103 Lanz
104 Lindner
105 MAN
107 Massey Ferguson
120 Mercedes Benz
122 Multicar
123 Porsche
124 Renault
129 Same
133 Schlüter
135 Steyr
140 Valmet
142 Zetor

Trailer Accessories 145

145 Hand brake lever
145 Jaw coupling
145 Ball coupling
145 Ball bolt
146 Brake shoes for trailer
155 Brake drums for trailer
158 Wheel bolts for trailer
160 Sealing rings for trailer
162 Hub caps for trailer
163 Springs

Agriculture vehicles 164

164 Brake linings
169 Roll lining material
170 Axles

The listed spare parts are not original replacement parts. The original part-numbers (OEM) in this catalogue serve only to comparing purposes.

Bautz

non original parts	Order no.	Article description	Tractor model	Cross-Ref.
	HF30009	Brake lining 180x30	Foot brake: AS170, AS200, AS220 Hand brake: A200, A300 AL180, AS180, AW180 AL240, AS240, AW240 AL350, AW350	
	HF40001	Rivets 3x8		
	HF30022	Brake lining long 300x50	A200, A300 AL180, AS180, AW180 AL240, AS240, AW240 AL350, AW350	
	HF30020	Brake lining short 300x50		
	HF40004	Rivets 4x10		
	HF30091	Brake lining 210x45 12-holes	AS120	

Tractor brake parts

The listed spare parts are not original replacement parts. The original part-numbers (OEM) in this catalogue serve only to comparing purposes.

Order no.	Article description	Tractor model	Cross-Ref.	non original parts
HF25001	Brake disc (lined) Ø 180mm 16 teeth	MTS 50, 80, 82, 550, 570	503502040A	
HF25002	Actuating unit		503502030A	
HF25003	Brake disc (lined) Ø 204mm 16 teeth	MTS 82, 900, 920, 952	A5901200A101	
HF25004	Actuating unit		853502030	

The listed spare parts are not original replacement parts. The original part-numbers (OEM) in this catalogue serve only to comparing purposes.

Case IH

non original parts	Order no.	Article description	Tractor model	Cross-Ref.
	HF03016	Brake band hand brake 168x38	323, 353, 383, 423, 433, 453, 533, 553, 624, 633, 654, 724, 824	1971050C1 401992R3
	HF03018	Brake band hand brake 240x38	323, 383, 423, 453, 433, 533, 633, 733, 833	1964169C2 1964169C1 717070R41
	HF03017	Brake band hand brake 305x40	644, 743, 743XL, 744, 745, 745XL 844S, 844XL, 856XL, 955, 955XL, 956	1964072C1 3057407R21
	HF03156	Brake band hand brake 305x40		C1964074C3
	HF03079	Brake drum		3059186R3
	HF03020	Brake disc hand brake, for 40 km/h Ø 142mm 16 teeth	Maxxum 5120, 5130, 5140, 5150 MX 80C, 90C, 100, 110, 120, 135, 150, 170	1345726C1
	HF03021	Plate Ø 148mm		1341163C3
	HF03102	Actuating Unit		A158090

Tractor brake parts

The listed spare parts are not original replacement parts. The original part-numbers (OEM) in this catalogue serve only to comparing purposes.

Order no.	Article description	Tractor model	Cross-Ref.	non original parts
HF30009	Brake lining 180x30	DLD-2, D212+214+215 +217+219	713371R2	
HF40001	Rivets 3x8			
HF35001	Brake lining set 4 pieces + rivets foot brake Ø 127mm	DED-3, D320, D322, D324, D326, DGD-4, D430, D432	713255R93	
HF03003	Brake disc (lined) 127 teeth		711319R12	
HF03002	Actuating unit		716953R1	
HF35002	Disc lining set 4 pieces + rivets Ø 143mm	D436, D439, D440, 323, 353, 383, 423, 433, 453, 533, 633	3134668R3 751761R92	
HF03004	Brake disc (lined) Ø 143mm		3134666R93 1975458C2 717769R91 3058680R92	
HF03005	Actuating unit		786459R1	

The listed spare parts are not original replacement parts. The original part-numbers (OEM) in this catalogue serve only to comparing purposes.

Case IH

non original parts	Order no.	Article description	Tractor model	Cross-Ref.
	HF35003	Brake lining set 4 pieces + rivets foot brake Ø 165mm	323, 353, 383, 423, 453, 533 633	3134667R2 3040152R92
	HF03007	Brake disc (lined) Ø 165mm 10 teeth 35x41		131788A1 3064170R91
	HF03008	Actuating unit Ø 165mm		786460R21
	HF35004	Disc lining set Ø 178mm 4 pieces + rivets	523, 624, 553, 654, 724, 824 433, 533, 633, 733, 833, 440 540, 640, 740, 840, 940	3134669R2 3069460R91
	HF03010	Brake disc (lined) Ø 178mm 10 teeth 35x41		131786A1 3134665R91 3229907R1
	HF03011	Brake disc (lined) Ø 178mm 10 teeth 48x56.5	523, 553, 624, 654, 724, 824	313466R2
	HF03012	Actuating unit Ø 178mm		787004R22
	HF03121	Actuating unit Ø 178mm		3230159R91

Tractor brake parts

The listed spare parts are not original replacement parts. The original part-numbers (OEM) in this catalogue serve only to comparing purposes.

Order no.	Article description	Tractor model	Cross-Ref.	non original parts
HF35005	Brake lining set 4 pieces + rivets foot brake Ø 200mm	553, 554, 644, 654, 724, 743 743XL, 744, 745S, 745XL 824, 844	131787A1 3225582R91	
HF03014	Brake disc (lined) Ø 200mm		131787A1 3225582R91	
HF03015	Actuating unit Ø 200mm		3142883R94	
HF03022	Brake disc (lined) foot brake Ø 226mm 10 teeth 48x56.5 oilbath	844, 844S, 844XL, 856XL 743, 743XL, 744, 745S, 745XL	3145546R91 3145546R92	
HF03023	Plate		3145548R2	
HF03024	Piston		3223252R7	
HF03025	O-ring small		3230854R1	
HF03026	O-ring large		3230853R1	
HF03027	Rotary shaft seal		3058107R91	

The listed spare parts are not original replacement parts. The original part-numbers (OEM) in this catalogue serve only to comparing purposes.

Case IH

non original parts	Order no.	Article description	Tractor model	Cross-Ref.
	HF03028	Brake disc (lined) Ø 225mm 10 teeth 48x56.5	955, 955XL, 956, 956XL 1055, 1055XL, 1056, 1056XL	3220450R94
	HF03029	Plate		3220455R2
	HF03030	Piston		3402717R2
	HF03025	O-ring small		3230854R1
	HF03026	O-ring large		3230853R1
	HF03027	Rotary shaft seal		3058107R91
	HF03031	Brake disc (lined) Ø 222mm 28 teeth	CS110, CS120, CS130, CS150	155700340029
	HF03032	Intermediate disc Ø 227mm		155700340030
	HF03033	Actuating unit Ø 222mm		133000340015
	HF03034	Brake disc (lined) Ø 258mm 15 teeth	3210, 3220, 3230, 4210, 4220, 4230, 4240, CX 70, 80, 90, 100	114622C2

Tractor brake parts

The listed spare parts are not original replacement parts. The original part-numbers (OEM) in this catalogue serve only to comparing purposes.

Order no.	Article description	Tractor model	Cross-Ref.	non original parts
HF03035	Brake disc (lined) Ø 300mm 16 teeth	5120, 5130, 5140, 5150, MX100, MX110, MX120, MX135, MX80C, MX90C, MX100C	A190067 351175A1	
HF03036	Plate Ø 222x305		1995365C1	
HF03037	Piston Ø 217x305		1995365C1	
HF03038	O-ring small		238-5277	
HF03039	O-ring large		238-5273	
HF03040	Brake disc (lined) Ø 242mm 28 teeth 55x60	CS 78, 86, 94, 80, 90, 100	155700340044	
HF03041	Metal disc Ø 248mm 248x155		133000340022	
HF03033	Actuating unit		133000340015	
HF03103	Brake disc (lined) Ø 327mm thickness 10mm 12 teeth	MXU100, 110, 115, 125, 130, 135	5191497	

The listed spare parts are not original replacement parts. The original part-numbers (OEM) in this catalogue serve only to comparing purposes.

Case IH

non original parts	Order no.	Article description	Tractor model	Cross-Ref.
	HF03104	Brake disc (lined) Ø 242mm 28 teeth 55x60	CS100, 110, 120, 130, 150 CVX120, 130, 150, 170, 1135, 1145, 1155, 1170, 1190, 1195	133000340016 133000341001 47106252
	HF03041	Metal disc Ø 248mm 248x155		133000340022
	HF03033	Actuating unit		133000340015
	HF03042	Brake disc (lined) Ø 305mm 18 teeth 180x130	Magnum 7130,7140,7230, 7240,7250 MX 150, 170, 180, 200, 220, 240, 270	120488C2
	HF03043	Metal disc Ø 308mm 308x192		120486C1
	HF03044	Plate Ø 192x308		139189C1
	HF03045	Piston		120490C1
	HF03038	O-ring small		238-5277
	HF03039	O-ring large		238-5273

Tractor brake parts

The listed spare parts are not original replacement parts. The original part-numbers (OEM) in this catalogue serve only to comparing purposes.

Order no.	Article description	Tractor model	Cross-Ref.	non original parts
HF03046	Brake master cylinder	955, 1055, 956, 1056, 956XL, 1056XL	3223077R91 3402462R91 3232098R91	
HF03047	Repair kit			
HF03105	Expansion reservoir		3146062R91	
HF03048	Brake master cylinder	946, 1046, 1246	3141682R92	
HF03105	Expansion reservoir		3401328R1 3141806R91	
HF03049	Brake master cylinder (without reservoir)	1455XL	3230543R94	
HF03050	Brake master cylinder	3210, 3220, 3230 without cab 4210, 4220, 4230, 4240 without cab C50, C60, C70, C80,C90, C100	1287843C92	
HF03051	Repair kit		1288228C1	
HF03053	Brake master cylinder	485XL, 585XL, 685XL, 785XL, 885XL, 856XL, 3210, 3220, 3230, 4210, 4220, 4230, 4240 5120, 5130, 5140, 5150, 5220, 5230, 5240, 5250, 743, 745, 844, 845, 856	226301A1 3129643R91 1287734C92 1287846C91	
HF03054	Repair kit		1288228C1 1288229C1	
HF03055	Brake master cylinder	644, 743+S, 744, 844+S, 845	3145559R91	
HF03056	Repair kit		3220707R91	

The listed spare parts are not original replacement parts. The original part-numbers (OEM) in this catalogue serve only to comparing purposes.

Case IH

non original parts	Order no.	Article description	Tractor model	Cross-Ref.
	HF03057	Brake master cylinder	CS 78, 86, 94, 110, 120, 130, 150, CVX 120, 130, 150, 170	133135155 133135418
	HF03058	Repair kit		133735020
	HF03106	Brake master cylinder 22mm	1255, 1255XL, 1455, 1455XL	3401218R91 1287844C91
	HF03107	Repair kit		3232098R91
	HF03108	Brake master cylinder 19mm	1255XL, 1455XL	3401973R92 1287845C91
	HF03109	Repair kit		128823R1
	HF03110	Brake master cylinder	248, 258, 268, 278, 385, 454, 475, 484, 485, 574, 584, 585, 674, 684, 685, 784, 785, 884, 885, 2400	527542R92
	HF03111	Repair kit		3125824R1
	HF03112	Clutch master	CX80, 90, 100 3210, 3220, 3230, 4210, 4220, 4230, 4240, 485, 585, 685, 785, 885, 495, 595, 695, 795, 895, 995	3129807R92 86011371
	HF03113	Repair kit		80327C91
	HF03114	Clutch cylinder	CS110, 120, 130, 150	1-33-123-004
	HF03115	Clutch cylinder		1-31-723-101

Tractor brake parts

The listed spare parts are not original replacement parts. The original part-numbers (OEM) in this catalogue serve only to comparing purposes.

Order no.	Article description	Tractor model	Cross-Ref.	non original parts
HF03059	Wheel brake cylinder left	CS 78, 86, 94	155700340049	
HF03060	Wheel brake cylinder right		155700340050	
HF03062	Wheel brake cylinder 38mm	1255, 1255XL, 1455, 1455XL	3401367R1	
HF03063	Repair kit			
HF03064	Wheel brake cylinder 22mm reservoir slot	946, 1046, 1246	3141932R91	
HF03064-1	Pressure reservoir round		3148559R91	
HF03065	Repair kit			
HF45001	Brake shoe hand brake 250x30		1964167C1	
HF45003	Brake shoe foot brake 250x60		3148560R2	
HF30048	Brake lining 60x5x270 14-holes		3226414R2	

The listed spare parts are not original replacement parts. The original part-numbers (OEM) in this catalogue serve only to comparing purposes.

Case IH

non original parts	Order no.	Article description	Tractor model	Cross-Ref.
	HF45005	Brake shoe foot brake 270x80	1255, 1255 XL, 1455, 1455 XL	1964168C1
	HF03069	Spring foot brake		3217702R1
	HF45001	Brake shoe hand brake 250x30		1964167C1
	HF45002	Brake shoe hand brake 250x40		1964185C1
	HF03071	Spring hand brake		3141953R1
	HF50001	Brake pad (2 pcs) 78x66x15	disc thickness 12mm	1964205C1
	HF50002	Brake pad (2 pcs) 98x68x15	disc thickness 24mm	1964139C1
	HF03075	Brake caliper Ø 54mm	disc thickness 12mm	1964136C1
	HF03076	Brake caliper Ø 54mm	disc thickness 24mm	1964204C1
	HF03074	Repair kit brake caliper mineral oil		3404269R91
	HF03116	Brake disc for cardan shaft thickness 12mm		3230686R1
	HF03117	Brake disc for cardan shaft thickness 24mm		1964137C1

Tractor brake parts

The listed spare parts are not original replacement parts. The original part-numbers (OEM) in this catalogue serve only to comparing purposes.

Order no.	Article description	Tractor model	Cross-Ref.	non original parts
HF30008	Brake lining hand brake 250x40	1255, 1255 XL, 1455, 1455 XL	3141952R1	
HF03077	Assembly kit brake caliper			
HF03078	Brake drum for hand brake 250x30+40 foot brake 270x80		3217703R1	
HF03080	Brake drum for hand brake 250x30 foot brake 250x60	946, 1046, 1246	3141929R1	
HF03081	Hand brake cable	440, 540, 640, 740, 840, 940	98362C2	
HF03082	Hand brake cable	743XL, 745XL, 844XL, 956XL, 1056XL	3232912R3	

The listed spare parts are not original replacement parts. The original part-numbers (OEM) in this catalogue serve only to comparing purposes.

Case IH

non original parts	Order no.	Article description	Tractor model	Cross-Ref.
	HF03083	Hand brake cable	844XL, 956XL, 1056XL	3405629R1
	HF03084	Hand brake cable	Maxxum 5120, 5130, 5140, 5150, 5220, 5230, 5240, 5250	1531948C1
	HF03085	Hand brake cable	Magnum 7110, 7120, 7130, 7140 7150, 7210, 7220, 7230, 7240, 7250	1343929C2
	HF03086	Hand brake cable right	CS78, CS86, CS94	134643061
	HF03087	Hand brake cable left		134643062
	HF03088	Hand brake cable	MX80C, MX90C, MX100C	220448A6
	HF03089	Hand brake cable 860mm	3210, 3220, 3230, 4210, 4220, 4230, 4240	134779A1
	HF03090	Clutch cable 695mm	743XL, 745XL, 844XL, 845XL, 856XL, 955XL, 956, 956XL, 1055, 1056, 1056XL	3404859R1

The listed spare parts are not original replacement parts. The original part-numbers (OEM) in this catalogue serve only to comparing purposes.

Order no.	Article description	Tractor model	Cross-Ref.	non original parts
HF30075	Brake lining set 4 pieces + rivets width 44mm	770, 850, 885, 95, 990	K960595	
HF30076	Brake lining set 4 pieces + rivets width 63mm	990, 995, 996, 1190, 1194, 1290, 1390	K962266	
HF30077	Brake lining set 4 pieces + rivets width 89mm 3 rivet lines	1200, 1210, 1212, 1390, 1490	K964542	
HF04004	Brake master cylinder	990, 995, 996, 1190, 1210, 1212, 1290, 1390, 1410, 1412, 1490, 1494, 1594, 1690, 1694, 1694T	K950544	
HF04005	Repair kit		K964572	
HF04006	Slave cylinder	1190, 1290, 1390	K203416	
HF04007	Repair kit		K965723	
HF04008	Slave cylinder	1490, 1494, 1594, 1690, 1694, 1694T	K200219	
HF04009	Repair kit		K965765	

The listed spare parts are not original replacement parts. The original part-numbers (OEM) in this catalogue serve only to comparing purposes.

Case IH (David Brown)

non original parts	Order no.	Article description	Tractor model	Cross-Ref.
	HF04010	Brake disc (lined) Ø 224mm 23 teeth	1410, 1412, 1690, 1594, 1694	K945754
	HF04011	Metal disc Ø 228mm		K945755
	HF04012	Actuating unit oilbath		K945753

Tractor brake parts

The listed spare parts are not original replacement parts. The original part-numbers (OEM) in this catalogue serve only to comparing purposes.

Order no.	Article description	Tractor model	Cross-Ref.	non original parts
HF30009	Brake lining 30x4x180 7-holes	Huckepack 15PS implement carrier 15PS combine harvester 15PS	drum size 180x30	
HF30002	Brake lining 20x4x200 8-holes		drum size 180x20	
HF30008	Brake lining 40x5x270 10-holes		drum size 250x40	
HF05003	Wheel brake cylinder Ø 28mm		655339	
HF05004	Wheel brake cylinder Ø 28mm		2809974	
HF05005	Wheel brake cylinder Ø 28mm		909092	
HF05006	Wheel brake cylinder Ø 44mm		4117980	
HF05007	Brake master cylinder Ø 15mm		655339	

The listed spare parts are not original replacement parts. The original part-numbers (OEM) in this catalogue serve only to comparing purposes.

Deutz KHD

non original parts	Order no.	Article description	Tractor model	Cross-Ref.
	HF35006	Brake lining set 152x79x5 4 pieces + rivets	DX 145, 6.50	04377300
	HF06002	Brake disc compl.		04377280
	HF06003	Actuating unit		02383780
	HF06004	Actuation cylinder		04300413
	HF35007	Disc lining set (disc brake) Ø 228x150x4.7 4 pieces + rivets	3006, 4006, 4506, 5006, 5206, 5506, 6206, 4007,4807, 5207, 5207C, 6007 6007C, 6207, 6207C, 6507, 6507C, 6907, 6907C, Intrac 2002, DX140,145, DX 3.10-30-50-70 SC+VC	04349301 02374363

Tractor brake parts

The listed spare parts are not original replacement parts. The original part-numbers (OEM) in this catalogue serve only to comparing purposes.

Order no.	Article description	Tractor model	Cross-Ref.	non original parts
HF06006	Brake disc (lined) Ø 228mm 32 teeth	4006,4505,4506, 5006,5206,5506, 5206,4007,5207, 6007,6207,6507, 6907,6007C,6207C, 6507C, Intrac 2002 DX140,145,3.10SC, 3.30SC	04399879	
HF06007	Brake disc (lined) Ø 228mm 36 teeth	2506,3006,4006, 4505,4506,5006, 52065506,6206, 4007,4807,5207, 6007,62075207C, 6007C,6207C, 6507C,6907C, DX3.10SC, DX3.30SC, DX3.50SC, DX3.10VC bis 3.90VC	04399878	
HF06008	Actuating unit Ø 228mm	3006, 4006, 4506, 5006, 5206, 5506, 6206, 4007,4807, 5207, 5207C, 6007,6007C, 6207, 6207C, 6507, 6507C, 6907, 6907C, Intrac 2002, DX140,145, DX 3.10-30-50-70 SC+VC	04340698 02385578	
HF06200	Tension spring		02305009	
HF06201	Ball		02305008	
HF06009	Sealing bush 62x100x20.28		02372170	
HF06010	Sealing bush 68x100x20		04379710	
HF06011	Nip ring 62x68x43		04340193	

The listed spare parts are not original replacement parts. The original part-numbers (OEM) in this catalogue serve only to comparing purposes.

Deutz KHD

non original parts	Order no.	Article description	Tractor model	Cross-Ref.
	HF06012	Brake disc KNOTT	Agrotron 4.70-80-85-90-95, 6.00-01-05-15-20-30 6.45, 80, 85, 90, 100, 105, 106, 110, 120, 135, 150	04417527
	HF06013	Brake disc SIRMAC		04426602
	HF06014	Metal disc KNOTT		04417528
	HF06015	Metal disc SIRMAC		04428557
	HF06016	Actuating unit KNOTT	KNOTT Version up to MY 2003 SIRMAC Version from MY 2003 on KNOTT Actuating unit being pushed SIRMAC Actuating unit being pulled	04423836
	HF06017	Actuating unit SIRMAC		04428543
	HF06018	Actuation cylinder KNOTT		04424457
	HF06019	Repair kit KNOTT		
	HF06020	Actuation cylinder SIRMAC		04428542
	HF06021	Repair kit SIRMAC		
	HF06022	Spare parts set KNOTT	containing actuating unit 5+4 discs	04417526
	HF06023	Spare parts set SIRMAC	containing actuating unit 5+4 discs	04428541

Tractor brake parts

The listed spare parts are not original replacement parts. The original part-numbers (OEM) in this catalogue serve only to comparing purposes.

Order no.	Article description	Tractor model	Cross-Ref.	non original parts
HF06024	Brake disc (lined) Ø 224mm 26 teeth	DX 145, 160 DX7.10	04342777	
HF06025	Metal disc		04309183	
HF06026	Actuating unit		04309180	
HF06027	Brake master cylinder	D6807, 7206, 7807, 8707 DX145, 160, 165	04387196	
HF06028	Repair kit Ø 20mm			
HF06029	Brake master cylinder		04840239	
HF06030	Repair kit Ø 22mm		04322896	
HF06031	Brake master cylinder Ø 15mm	6008, 10008, 8006, 9006, 13006 - without bore for stoplight switch	04367200 02375594	
HF06032	Brake master cylinder Ø 15mm	- with bore + stoplight switch	04367201	
HF06033	Repair kit		04335550	
HF06034	Brake master cylinder Ø 19mm for drum brake	D6807C, 7207 DX3.70SC, 3.90SC DX4.10, 4.30, 4.50	04369292	
HF06035	Repair kit		04382941	
HF06036	Brake master cylinder Ø 17mm	DX3.10-30-50-65 SC, DX4.17Hopfen AgroXtra 3.57,4.07,4.17	04382435	
HF06177	Repair kit		04382940	

The listed spare parts are not original replacement parts. The original part-numbers (OEM) in this catalogue serve only to comparing purposes.

Deutz KHD

non original parts	Order no.	Article description	Tractor model	Cross-Ref.
	HF06037	Brake master cylinder Ø 19mm disc brake	DX3.70-90SC, DX3.10-30-50-60-65-75 VC, DX4.10,4.30, 4.50, 4.70, DX6.05, DX6.10, 6.30, DX4.57 Hopfen, AgroPrima 4.31, 4.51, 4.56, AgroXtra 4.47, 4.57	04382436
	HF06035	Repair kit		04382941
	HF06038	Brake master cylinder Ø 23mm	Agrotron 4.70, 4.80, 4.85,4.90, 4.95, 6.00, 6.01, 6.05, 6.15, 6.20, 6.30, 6.45, 80, 85, 90, 100, 105, 106, 110, 120, 135, 150, 230, 260	04418388
	HF06225	Repair kit		
	HF06039	Brake master cylinder Ø 22mm	DX3SC+VC, 3.70-90-SC, DX3.10-30-50-60-65-70-75-90-VC, DX4.10-30-50-70, DX6.05-10-30-50, Hopfen DX4.57, Agro Prima 4.31-51-56, 6.06, 6.16, AgroXtra 4.47, 4.57, 6.07, 6.17,	04382438
	HF06040	Repair kit		04382943
	HF06041	Brake master cylinder Ø 20mm	AgroStar 4.61-71, 6.11-21-31-61 AgroStar Freisicht 4.68, 4.78, 6.08, 6.28, 6.38	04386680
	HF06042	Repair kit		04382942
	HF06045	Brake master cylinder Ø 19mm	DX85, DX90, DX110, DX120	04313488
	HF06046	Repair kit		

The listed spare parts are not original replacement parts. The original part-numbers (OEM) in this catalogue serve only to comparing purposes.

Order no.	Article description	Tractor model	Cross-Ref.	non original parts
HF06043	Brake master cylinder Ø 20mm	DX3.10-30-50-60-65SC, DX3.70-90VC, DX7.10, DX4.17, DX4.57Hopfen, AgroPrima 4.31-51-56, 6.06, 6.16, AgroStar 4.61-71, 6.11-21-31-61, AgroStar Freisicht 4.68-78, 6.08-28-38, AgroXtra 4.47-57, 6.07-11	04389972	
HF06042	Repair kit		04382942	
HF06176	Brake master cylinder Ø 17mm	DX3.10V, 3.30V/F/S, 3.70V/F, 3.90F/S AgroCompact 3.30V/F, 3.50V/F, 3.90S	04386878	
HF06177	Repair kit		04382940	
HF06219	Brake master cylinder	Intrac 2004	04317988	
HF06178	Brake master cylinder	Agrotron 80, 90, 100, 105, 110, 108, 118, 120, 128, 130, 140, 150, 150.7, 155, 165, 165.7, 106MK3, 110MK3, 115MK3, 120MK3, 135MK3, 150MK3, 165MK3	04452974	
HF06179	Brake master cylinder	Agrotron 160, 175, 200	04422522	
HF06180	Brake master cylinder	Agrotron 160MK3, 175MK3, 200MK3	04429063	

The listed spare parts are not original replacement parts. The original part-numbers (OEM) in this catalogue serve only to comparing purposes.

Deutz KHD

non original parts	Order no.	Article description	Tractor model	Cross-Ref.
	HF06181	Clutch master mineral oil	Agrotron 106, 110, 115, 120, 135, 150MK3, 80, 85, 90, 100, 105	04429510
	HF06182	Clutch master	Agrotron 230, 260	04432280
	HF06044	Clutch master	DX230	04326389
	HF06047	Clutch slave (double-clutch) Ø 31mm	DX6.05, 6.10, 6.30, 6.50, 7.10	04352156
	HF06048	Clutch slave (simple-clutch) Ø 31mm		04383377
	HF06049	Clutch master (at pedal) Ø 25mm		04369687
	HF06050	Repair kit		04369689

Tractor brake parts

The listed spare parts are not original replacement parts. The original part-numbers (OEM) in this catalogue serve only to comparing purposes.

Order no.	Article description	Tractor model	Cross-Ref.	non original parts
HF06051	Clutch slave Ø 23.81 mm	AgroStar 4.61, 4.68, 4.71, 4.78, 6.08, 6.11, 6.21, 6.28, 6.31, 6.38, 6.61, 6.71, 6.81	04384479	
HF06052	Clutch slave Ø 25.4 mm		04385230	
HF06053	Clutch master (at pedal) Ø 25.4 mm		04386677	
HF06054	Clutch master mineral oil Ø 22 mm	Agrotron 4.70, 4.80, 4.90, 4.95, .00,6.05, 6.15, 6.20, .30,6.45, 80, 85, 90, 100, 105, 106, 110, 120, 135, 150	04411562	
HF06055	Clutch master Ø 19 mm	Intrac 2004	04317833	
HF06056	Wheel brake cylinder for drum brake, rear Ø 22 mm	D 8006-9005-9006-10006-13006	04322732	
HF06057	Wheel brake cylinder for drum brake, front Ø 25 mm	DX3.10-30-50-60-65-70-SC, DX3.10-30-50-60-65-70-VC AgroXtra 3.57, 4.07, 4.17, 7206	04352554	

The listed spare parts are not original replacement parts. The original part-numbers (OEM) in this catalogue serve only to comparing purposes.

Deutz KHD

non original parts	Order no.	Article description	Tractor model	Cross-Ref.
	HF06058	Wheel brake cylinder (duplex) Ø 28mm	Intrac 2004 AgroCompact 3.30V/F DX3.10SC, DX3.10V/F/S	02381321
	HF06059	Repair kit		
	HF06060	Wheel brake cylinder	Intrac 2002, 2003	04304304
	HF06061	Repair kit Ø 31mm		
	HF06062	Wheel brake cylinder		02376797
	HF06063	Repair kit Ø 25mm		
	HF06064	Wheel brake cylinder left wheel	Intrac 2002 without All-wheel Drive (rigid axle)	02377156
	HF06183	Wheel brake cylinder right wheel		02377154
	HF06065	Wheel brake cylinder double-brake, rear Ø 38mm	DX 3.70-90-SC, DX 3.70-90-VC, DX4.10, 4.30, 4.50, DX4.47 Hopfen AgroPrima 4.31, 4.51, 4.56 AgroXtra 4.47, 4.57	04388716
	HF06066	Repair kit FTE version		
	HF06066-A	Repair kit ATE version		

Tractor brake parts

The listed spare parts are not original replacement parts. The original part-numbers (OEM) in this catalogue serve only to comparing purposes.

Order no.	Article description	Tractor model	Cross-Ref.	non original parts
HF06067	Brake caliper left up Knott Ø 60mm	Service brake: DX85, 90, 92, 110, 120, DX230 DX4.70, 6.05, 6.10, 6.30, 6.50 AgroStar 4.61, 4.71, 6.11, 6.21, 6.31 AgroXtra 4.47, 4.57, 6.07, 6.17	04384738	
HF06068	Brake caliper right up Knott Ø 60mm		04384452	
HF06069	Brake caliper left down Knott Ø 60mm		04384753	
HF06070	Brake caliper right down Knott Ø 60mm		04384454	
HF06082	Repair kit without pistons Knott		04384832	
HF06084	Repair kit with pistons		04342578	
HF06206	Repair kit		04387867	
HF06074	Brake caliper left up	Service brake: AgroStar 6.61	04384451	
HF06075	Brake caliper right up		04384450	
HF06076	Brake caliper right down		04380209	
HF06077	Brake caliper left down		04380208	
HF06184	Brake caliper left up	Service brake: DX85, 90, 92, 110, 120, 4.70, 6.05, 6.10, 6.30, 6.50, 230	04377901	
HF06185	Brake caliper right up		04377900	
HF06186	Brake caliper left down		04377899	
HF06187	Brake caliper right down		04377898	
HF06188	Repair kit without pistons		04384428	
HF06084	Repair kit with pistons		04342578	

The listed spare parts are not original replacement parts. The original part-numbers (OEM) in this catalogue serve only to comparing purposes.

Deutz KHD

non original parts	Order no.	Article description	Tractor model	Cross-Ref.
	HF06073	Brake caliper Ø 60mm ATE, FTE	Service brake rear: DX3.10SC+VC+V/F/S, DX3.10-30SC, DX3.50S+SC,DX3.60+65SC, DX3.65VC, DX3.70V/F, DX3.80SC, DX3.90S+F, DX6.50, DX4.17Hopfen AgroXtra 3.57, 4.07, 4.17, AgroCompact 3.50S, 3.70V/F, 3.90F/S	04396512
	HF06080	Repair kit FTE version		04367452 04376935
	HF06073-1	Protective cap ATE version (white)		04320679
	HF06190	Brake caliper 2 pistons	Service brake: Intrac 6.30, 6.60	04371817
	HF06078	Brake caliper 4 pistons Knott Ø 40mm	Propshaft: AgroPrima 4.31, 4.51, 4.56 AgroXtra 3.57, 4.07, 4.17, 4.47, 4.57 DX3.10-30-50-60-65 SC+VC	04381401
	HF06191	Repair kit without pistons		04375656
	HF06085	Repair kit with pistons		
	HF06071	Brake caliper 2 pistons ATE Ø 54mm	Propshaft: Intrac 2004, AgroPrima 4.31, 4.51, 4.56, AgroXtra 3.57, 4.07, 4.17, 4.47, 4.57, DX3.10-30-50-60-65-70-90 SC+VC, DX4.10-30-50-70	04378819
	HF06192	Repair kit without pistons		

Tractor brake parts

The listed spare parts are not original replacement parts. The original part-numbers (OEM) in this catalogue serve only to comparing purposes.

Order no.	Article description	Tractor model	Cross-Ref.	non original parts
HF06072	Brake caliper Knott Ø 60mm	Propshaft: AgroPrima 6.06, 6.16 AgroStar 4.61, 4.71, 6.11, 6.21, 6.31, 6.61 AgroXtra 6.07, 6.17	04382947	
HF06193	Brake caliper	Propshaft: AgroCompact 3.30V/F, 3.50V/F, 3.50S, 3.70V/F, 3.90F+S	04397877	
HF06087	Brake fluid tank 2 connections	Agro Prima 4.31, 4.51, 4.56, 6.06, 6.16, Agro Xtra 3.57, 4.07, 4.17, 4.47, 4.57, 6.07, 6.17, D07 6807, D07 7007, D07 7207, D07 7807, DX 3.10, DX 3.30, DX 3.50, DX 3.60, DX 3.65, DX 3.70, DX 3.80, DX 3.90 Hopfen DX 4.17, DX 4.57	04311134	
HF06088	Cap		04311138	
HF50003	Brake pad (2pcs) cardan shaft 77x18.5x70	DX80-86, DX3.10-50-70-75-90VC, DX3.10-30-50-60-65-70-90SC, DX4.10-30-40-51-70, DX6.05, Intrac 2004, Agro Prima 4.51 Agro Compact 3.30V/F, 3.50S, 3.50V/F, 3.90F+S	04378840	
HF50004-4	Brake pads (4pcs) cardan shaft+foot brake 90x15x74	Agrotron 4.70-80-85-90-95, Agrotron 6.00-05-15-20-30-45 DX85-90-92-110-120, 4.70, 6.10-30 DX6.50	04377345 04314064 04377943	

The listed spare parts are not original replacement parts. The original part-numbers (OEM) in this catalogue serve only to comparing purposes.

Deutz KHD

non original parts	Order no.	Article description	Tractor model	Cross-Ref.
	HF50005	Brake pad (2 pcs) cardan shaft Knott 90x19x70	DX3.10-30-50-60-65, DX4.70 AgroXtra 3.57, 4.07, 4.17, 4.47, 4.57, AgroPrima 4.31, 4.51, 4.56	04381403
	HF50006	Brake pad (2 pcs) cardan shaft ATE 90x15x70	DX3.10-30-50-60-65 AgroXtra 3.57, 4.07, 4.17, 4.47, 4.57 AgroPrima 4.31, 4.51, 4.56	04375655
	HF50007	Brake pad (2 pcs) cardan shaft + foot brake 90x15x70	Agrostar 4.61-68-71-78, 6.07-08-11-17-21-28-31-38, 6.61-71-81, Agroprima 6.06, 6.16, AgroXtra 6.07, 6.17 Cardan shaft: Agroprima 4.31-51-56,5.56 AgroXtra 4.47-57, DX140, 145	04384833
	HF50008	Brake pad (2 pcs) cardan shaft 90x15x70	AgroCompact 3.30V+F, 3.50V+F 3.60V+F	04399217
	HF50009	Brake pads (2 pcs) cardan shaft 98x15x68	Intrac 6.05, 6.30, 6.60	04374902
	HF50010	Brake pad (8pcs) foot brake	DX145, DX6.50	04377352

The listed spare parts are not original replacement parts. The original part-numbers (OEM) in this catalogue serve only to comparing purposes.

Order no.	Article description	Tractor model	Cross-Ref.	non original parts
HF50011	Brake pad (8pcs) foot brake	AgroXtra 3.57, 4.07, 4.17, DX3.10-30-50-60-65-70-80-90SC+V+V/F AgroPrima	04379591	
HF06098	Accessory set		04349607	
HF06099	Panel		04342576	
HF06086	Repair kit		04375167	
HF06195	Brake disc 270x13 8-holes	Intrac	04309411	
HF06100	Brake disc 224x13 6-holes cardan shaft	DX3.10-30-50-60-65 SC DX3.10-30-50-60-65 VC Hopfen DX4.17, 4.57 Agro Prima 4.31-51-56 AgroXtra 3.57,4.07-17-47-57	04368394	

The listed spare parts are not original replacement parts. The original part-numbers (OEM) in this catalogue serve only to comparing purposes.

Deutz KHD

non original parts	Order no.	Article description	Tractor model	Cross-Ref.
	HF06101	Brake disc 255x13 / 6-holes cardan shaft	DX3.70-90 SC DX3.10-30-50-70-90 VC DX4.10-30-50-70, DX6.05 DX92	04342617
	HF06102	Brake disc 284x22 / 8-holes cardan shaft	DX6.10-30-50 AgroPrima 6.06, 6.16 AgroStar Freis. 4.68, 4.71, AgroStar 4.61-71,6.11 6.2 AgroXtra 6.07-17	04344804
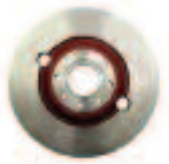	HF06103	Brake disc 315x22 / 8-holes cardan shaft	DX6.10-30-50 AgroStar 6.61	04379050
	HF06221	Brake disc Ø 425 mm 36 teeth	AgroXtra 3.57, 4.07, 4.17; DX3.10, DX3.30, DX3.50, DX3.60, 65, 70, 80, 90; Hopfen DX4.17 AgroCompact 3.50S, 3.90S	04372128
	HF06105	Brake disc + brake drum total height 175mm 180x60, 24 teeth	AgroPrima 4.31-51-56, 6.06, 6.16 AgroStar 4.61-71, 6.11, 6.21-31-61, AgroStar Freisicht 4.68, 4.78, 6.08-28-38, AgroXtra 4.47-57, 6.07-17 DX6.06	04384112
	HF06104	Brake disc + brake drum total height 194mm 180x60, 24 teeth	DX85-90-110-120, DX4.70, DX6.05-10-30, Intrac 2002	04313624

Tractor brake parts

The listed spare parts are not original replacement parts. The original part-numbers (OEM) in this catalogue serve only to comparing purposes.

Order no.	Article description	Tractor model	Cross-Ref.	non original parts
HF06106	Brake drum hand brake 180x30 foot brake 250x60	6006, 6805, 6807, 7006, 7206, 7207, 7007, 7807, DX3.70, DX3.90VL, DX3.90VC	03393285	
HF06197	Brake drum 180x30, 8 teeth height 65mm toothing 38/32	D5206	02313904 Gußnr. 1424290102	
HF06198	Brake drum 180x60	7506, 8006, 100.06	02382440 02382443	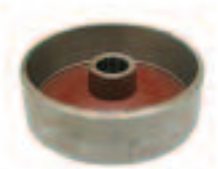
HF06107	Brake drum 254x68 180x40	DX3.70-90SC+VC DX4.10-30-50, DX4.57 Hopfen, AgroPrima 4.30-51-56, AgroXtra 4.47, 4.57	04323315	
HF06108	Brake disc + brake drum left	Hopfen DX4.57 AgroPrima 4.31-51-56, 6.06 AgroStar Freisicht 4.68, 4.71 AgroStar 4.61-71, 6.11-21-31-61 AgroXtra 4.47-57, 6.07-17	04389839	
HF06109	Brake disc + brake drum right		04389840	

The listed spare parts are not original replacement parts. The original part-numbers (OEM) in this catalogue serve only to comparing purposes.

Deutz KHD

non original parts	Order no.	Article description	Tractor model	Cross-Ref.
	HF45006	Brake shoe (complete) 180x30 hand brake	DX3.70+3.90VC AgroCompact 3.30V+F, 3.50V Intrac 2004	04379105 04378796
	HF06112	Brake shoe (complete) 180x30 hand brake	D15, D15.1, D25, D30, D40, D50 S, D80, D2505, D2506, D3005, D3006, D4005, D4006, D4506, D5005, D5006, D5206, D5505, D5506, D6206, F2L 514, Intrac 2002+03	04389852
	HF45007	Brake shoe (complete) 180x40 hand brake	D6806-7206-7806-6807C, 6907C, 7007C, 7207C, 7807C, DX80-86, DX3.70SC , DX3.90-4.10-30-31-50-51, with hydr.B.: 7007, 7207, 7807, DX80-85-86-3.70-90VC DX4.10-30-50-70-80-85-90-95	04380577
	HF45008	Brake shoe (complete) 180x60 hand brake	DX85, 90, 92, 110, 120, DX3.10-30, DX3.50-60-65 SC+SV, DX4.70, DX6.05, 6.10, 6.30, Intrac 6.30, 6.60 Agro Prima 4.31 4.51 4.56 6.06 6.16 Agro Xtra 3.57 4.07-17-47-57, 6.07-17 AgroStar 4.61-71, 6.11-21, 4.68-71	04378793
	HF06115	Tension spring		02386817

Tractor brake parts

The listed spare parts are not original replacement parts. The original part-numbers (OEM) in this catalogue serve only to comparing purposes.

Order no.	Article description	Tractor model	Cross-Ref.	non original parts
HF45001	Brake shoe (complete) 250x30 hand brake	D 8006, 10006, 13006	04383291	
HF45002	Brake shoe (complete) 250x40 hand brake		04385381 04385382	
HF45125	Brake shoe (complete) 250x60 foot brake	DX3.10SC+VC, 3.30SC+VC, DX3.50SC+VC, 3.60SC+VC, DX3.65SC+VC, AgroPrima 4.31, 4.51	04379725	
HF45009	Brake shoe (complete) 254x70 foot brake	6806, 6807+C, 7007+C, 7206, 7007, 7207+C, 7807+C, DX80+86, DX3.70+3.90VC, DX4.10, 4.30, 4.31, 4.50, 4.51, Hopfen DX4.57, AgroPrima 4.31, 4.51, 4.56,	04399854 04395234 04380582	
HF45010	Brake shoe (complete) 250x70 foot brake	6006, 6807, 7006, 7206, 6807, 7007, 7207, 7807, DX3.70+3.90VC	04379102	
HF45011	Brake shoe (complete) 300x50 foot brake	2506, 3006, 4006	04384742 03392134 03392135	

The listed spare parts are not original replacement parts. The original part-numbers (OEM) in this catalogue serve only to comparing purposes.

Deutz KHD

non original parts	Order no.	Article description	Tractor model	Cross-Ref.
	HF45012	Brake shoe (complete) 350x60 foot brake	2807, 3006, 3607, 4006, 4007, 4506, 4507+C, 4807+C, 5006, 5506, 6206	04384746 04307371 04307372 03392562
	HF45013	Brake shoe (complete) 75x5x250 left	Intrac 2002 without All-wheel Drive (rigid axle)	02377153
	HF45014	Brake shoe (complete) 75x5x250 right		02377151
	HF30018	Brake lining (brake band) 45x6x115 4-holes	D11, D15, D25, D30, D40, D2505, D3005, Motor type F1M 414, F1L 514, F2L 612, F2L 712 1Cylinder, ZD L 510	03328363
	HF40007	Rivets 5x12		
	HF30009	Brake lining 30x4x188 7-holes	D15, D15.1, D25, D30, D40, D50S, D80, D2505, D2506, D3005, D3006, D4005, D4006, D4506, D5005, D5006, D5206, D5505, D5506, D6206, F2L 514, Intrac 2002 + 03	04382821 02307088
	HF40001	Rivets 3x8		
	HF30010	Brake lining 30x4x188 7-holes		
	HF40003	Rivets 4x8		
	HF30012	Brake lining 30x4x188 10-holes	D12, D15, D17, D19, D22, D25, D66, D88, D90, D130, D150, D160, D180, D270, D400	drum size 180x30
	HF40001	Rivets 3x8		
	HF30013	Brake lining 30x4x188 10-hole		
	HF40003	Rivets 4x8		

Tractor brake parts

The listed spare parts are not original replacement parts. The original part-numbers (OEM) in this catalogue serve only to comparing purposes.

Order no.	Article description	Tractor model	Cross-Ref.	non original parts
HF30014	Brake lining 30x5x188 10-holes	3005, 3006, 4006, 4506, 5006, 5206, 5506, 6006, 6206, 6806, 7006, 7206 8006, 9006, 10006, 13006, 2807, 3607, 4007, 4507, 4807, 5207, 6007+C, 6207+C, 6507+C, 6807 6907+C	04303869 drum size 180x30	
HF40001	Rivets 3x8			
HF30052	Brake lining 40x5x188 10-holes	D6806-7206-7806-6807-6907-7007-7207-7807-C, DX80-85-86, DX3.70SC, DX3.90, DX4.10-30-31-50-51, with hydr.B.: 7007, 7207, 7807, DX80-85-86, DX3.70, DX90VC,DX4.10-30-50-70-80-85-90-95	04318559 drum size 180x40	
HF40001	Rivets 3x8			
HF30037	Brake lining 60x5x188 10-holes	DX80-85-86-90-92-110-120, DX3.10-30-50-60-65-80VC+SC, Intrac 2004+05, DX4.70, DX6.05-06-10-30-60, Agrostar 4.61-68-71-78, 6.08-11-21-31-38-61, AgroXtra 3.57, 4.04-17+H, 4.57H, 6.07, 6.17	04313988 drum size 180x60	
HF40003	Rivets 4x8			

The listed spare parts are not original replacement parts. The original part-numbers (OEM) in this catalogue serve only to comparing purposes.

Deutz KHD

non original parts	Order no.	Article description	Tractor model	Cross-Ref.
	HF30008	Brake lining 40x5x272 10-holes	Foot brake: D15, D5505, D5015, F 4 L 812 Hand brake: F 1 L 612/4, F 1 L 712, F 2 M 417, D40, D4005, F 3 L 514/54 F 3 L 712, D50, D8005, F 6 L 812, D7506, D9006	drum size 250x40
	HF40004	Rivets 4x10		
	HF30048	Brake lining foot brake 60x5x272 14-holes	8005, 8006, 9005, 9006, 10006, 13006	02389194 drum size 250x60
	HF40006	Rivets 5x10		
	HF30047	Brake lining foot brake 70x5x272 16-holes	D6006-6806-7006-7206 only mechan. brake: D6807-7007-7207-7807	02305250 drum size 250x70
	HF40004	Rivets 4x10		
	HF30053	Brake lining foot brake 70x7x207 12-holes	D6807C, D7007+C, D7207+C, D7807+C, DX80-86, DX3.70-90VC DX4.10-30-31-50-51	04349300 drum size 254x70
	HF40006	Rivets 5x10		
	HF30093	Brake lining foot brake 60x6x330 12-holes	Intrac 2002, 2003	04307440 drum size 300x60
	HF40007	Rivets 5x12		
	HF30025	Brake lining short 50x6x290 14-holes	D25-30-40-40.2-80 2505, 2506, 3005, 3006, 3607, 4005, 4006, 4506, 5005, 5006, 5206, 5505, 6206, 6806	03392131 04384742
	HF30023	Brake lining long 50x6x327 16-holes		03392132 drum size 300x50
	HF40006	Rivets 5x10		

Tractor brake parts

The listed spare parts are not original replacement parts. The original part-numbers (OEM) in this catalogue serve only to comparing purposes.

Order no.	Article description	Tractor model	Cross-Ref.	non original parts
HF30041	Brake lining short 60x7x335 14-holes	D50, 2807, 3006, 3607, 4006, 4007, 4506, 4507+C 4807+C, 5207C, 5006, 5506, 6206 Intrac 2002, 2003, 2004	03392561 04307370	
HF30042	Brake lining long 60x7x380 16-holes		03392560 04307368 drum size 350x60	
HF40010	Rivets 6x12			
HF30059	Brake lining foot brake 75x5x270 12-holes	Intrac 2002 without All-wheel Drive		
HF30044	Brake lining long 60x6x382 16-holes	F2L514/53/3,4/6	drum size 350x60	
HF40004	Rivets 4x10			
HF30031	Brake lining short 60x8x324 12-holes	F2L514/53/3,4/6 F 2 M 417 F 3 L 514 / 6 / 7	drum size 400x60	
HF30030	Brake lining long 60x8x435 16-holes			
HF40007	Rivets 5x12			
HF30034	Brake lining short 80x8x324 12-holes	D40, D4005, D50 F 3 L 712, F 3 L 514/54 F 4 L 712 F 4 L 514 / 4 / 5	drum size 400x80	
HF30045	Brake lining long 80x8x440 16-holes			
HF40015	Rivets 5x20			

The listed spare parts are not original replacement parts. The original part-numbers (OEM) in this catalogue serve only to comparing purposes.

Deutz KHD

non original parts	Order no.	Article description	Tractor model	Cross-Ref.
	HF06155	Clutch cable 1250mm	Serie "07" DX3.10-30-50-60-70-80-90, Agroprima 4.31-51-56, 6.06, 6.16, AgroXtra 3.57, 4.07, 4.17, 4.47, 4.57 6.07, 6.17, Agrocompact 3.30V/F, 3.50S, 3.50V/F, 3.70V/F, 3.90F, 3.90S	04354988 04383974 04396476
	HF06156	Clutch cable 620mm	DX4.10, 4.30, 4.50, 4.70 DX6.05, 6.10, 6.30	04378314
	HF06157	Bowden cable 3800mm M16 / M16 sheath fork head / M10-end fitting	Intrac	04372619

Tractor brake parts

The listed spare parts are not original replacement parts. The original part-numbers (OEM) in this catalogue serve only to comparing purposes.

Order no.	Article description	Tractor model	Cross-Ref.	non original parts
HF06168	Brake disc Ø 102mm 18 teeth	Combine harvester	06255604	
HF06169	Brake disc Ø 102mm 20 teeth	Combine harvester	16023484	
HF06170	Actuating unit Ø 102mm		06241314	
HF06044	Brake master cylinder	Combine harvester	06261151 06237268 06261149	
HF06171	Repair kit		06260317	
HF06044	Clutch cylinder	Combine harvester	16023484	
HF06171	Repair kit		06260317	
HF50012	Brake pad (2pcs) 77x65x14.4	Combine harvester Fahr 707		
HF30009	Brake lining 30x4x188 7-holes	Foot brake: D12, 15, 17, 19, 22, 66, 88, 90, 130, GT130 Hand brake: D22, 25, 150, 160, 180, 270, 400		
HF40001	Rivets 3x8			

The listed spare parts are not original replacement parts. The original part-numbers (OEM) in this catalogue serve only to comparing purposes.

Deutz Fahr

non original parts	Order no.	Article description	Tractor model	Cross-Ref.
	HF30044	Brake lining long 60x6x382 16-holes	Foot brake D22, 25, 150, 160, 180, 270 up to MY 58 D400 B from MY 58	drum size 350x60
	HF40004	Rivets 4x10		
	HF30031	Brake lining short 60x8x324 12-holes	Foot brake D30, D270 from MY 58 D42, D45, D400 A, B, C, L, Z	drum size 400x60
	HF30030	Brake lining long 60x8x435 16-holes		
	HF40007	Rivets 5x12		
	HF30034	Brake lining short 80x8x324 12-holes	Foot brake D55, D60, D540	drum size 400x80
	HF30045	Brake lining long 80x8x435 16-holes		
	HF40015	Rivets 5x20		
	HF30020	Brake lining short 50x6x248 12-holes	Hand brake D30, D270 from MY 58 D42, D45, D55, D60, D540, D400	drum size 300x50
	HF30022	Brake lining long 50x6x327 16-holes		
	HF40005	Rivets 4x12		
	HF06174	Spiral spring left		03392107
	HF06175	Spiral spring right		03392108

Tractor brake parts

The listed spare parts are not original replacement parts. The original part-numbers (OEM) in this catalogue serve only to comparing purposes.

Order no.	Article description	Tractor model	Cross-Ref.	non original parts
HF35004	Disc lining set Ø 178mm 4 pieces + rivets	Mammut		
HF07001	Brake disc (lined) Ø 178mm 27 teeth			
HF07002	Actuating unit Ø 178mm			
HF07003	Wheel brake cylinder Ø 28mm	3256		
HF07004	Brake master cylinder	3066		
HF50001	Brake pad (2 pcs)			
HF07005	Brake caliper Ø 54mm			

The listed spare parts are not original replacement parts. The original part-numbers (OEM) in this catalogue serve only to comparing purposes.

Eicher

non original parts	Order no.	Article description	Tractor model	Cross-Ref.
	HF07006	Brake master cylinder	3085	
	HF30056	Brake lining 50x6x345 12-holes foot brake		
	HF15049	Brake shoe (complete) foot brake		
	HF30078	Brake lining 38x6x345 12-holes hand brake		
	HF15050	Brake shoe (complete) hand brake		
	HF07011	Brake band (complete) 210x70	Eicher 16	
	HF30033	Brake band lining (2 pieces per band) 70x5x210 10-holes		
	HF40006	Rivets 5x10		

Tractor brake parts

The listed spare parts are not original replacement parts. The original part-numbers (OEM) in this catalogue serve only to comparing purposes.

Order no.	Article description	Tractor model	Cross-Ref.	non original parts
HF30002	Brake lining 20x4x200 8-holes	ED110, ED115, EM295, EKL15, ES200, ES201, ES202, G25, G160, G200	drum size 180x20	
HF40001	Rivets 3x8			
HF30009	Brake lining 30x4x188 7-holes	EA400, EA600, ED13, 16, 22, 25, 26, ED30, 33, (ED215, ED310, ED500 from Ch.77742. on) L18, 28, G160, 200, 280, ES200, EKL15, LH12, G13, G30, EM100, 200, 235, 295, 300, 500, 600, ES400, HD22, K25	drum size 180x30	
HF40001	Rivets 3x8			
HF30006	Brake lining 40x4.5x190 7-holes	ED 110/8, ED 115/8, EM 200 Tiger, EM 235, Panther ES 202, G 25, G 30, G 280	drum size 180x40	
HF40001	Rivets 3x8			
HF30027	Brake lining 50x4.5x170 8-holes		drum size 180x50	
HF40003	Rivets 4x8			
HF30026	Brake lining 50x5x190 10-holes	EM 200 Tiger, EM 295, EM 300, EA 400, ES 400, G 40, G 25	drum size 200x50	
HF40004	Rivets 4x10			
HF30008	Brake lining 40x5x270 10-holes	EA 600, EKL 11, 11/1, 15/II, ED 215 / 16, ED 500, ED 310 Mammut, EM 500 Mammut, 504, EM 600 Mammut 604 / All-wheel drive	drum size 250x40	
HF40004	Rivets 4x10			

The listed spare parts are not original replacement parts. The original part-numbers (OEM) in this catalogue serve only to comparing purposes.

Eicher

non original parts	Order no.	Article description	Tractor model	Cross-Ref.
	HF30022	Brake lining long 50x6x330 16-holes	ED16, ED22, HD22, ED25, ED26, ED210/10, ED40, ED42, ED50, ED 60, L40, L60	drum size 300x50
	HF30020	Brake lining short 50x6x235 12-holes		
	HF40004	Rivets 4x10		
	HF30044	Brake lining 60x6x380 16-holes	All-wheel drive	drum size 350x60
	HF40004	Rivets 4x10		
	HF30030	Brake lining long 60x8x435 16-holes	ED 40, ED 42, ED 50 ED 50/1, L40	drum size 400x60
	HF30031	Brake lining short 60x8x325 12-holes		
	HF40007	Rivets 5x12		
	HF30045	Brake lining 80x8x440 16-holes	L 60, L 60 S, ED 60	drum size 400x80
	HF40015	Rivets 5x20		

Tractor brake parts

The listed spare parts are not original replacement parts. The original part-numbers (OEM) in this catalogue serve only to comparing purposes.

Order no.	Article description	Tractor model	Cross-Ref.	non original parts
HF35008	Disc lining set 101x51x4.8 4 pieces + rivets	GT231, GTW231, GT250		
HF08002	Brake disc (lined) Ø 101mm 20 teeth		H231103030020	
HF08003	Actuating unit		F231101030030	
HF08004	Spring		F231101030040	
HF08005	Ball			
HF35003	Disc lining set 165x89x4.8	4S, 5S, Farmer 102+103+104+ 105+S+LS,105LSA,1 06+108+S+LS, 305LS, 305LSA, 306+307+308+309+3 10+311+312LS+LSA, GT275, 380, 390, 395, 509C, 510C, 511C, 512C, 514C, 515C Xylon 520, 522, 524		
HF08006	Brake disc (lined) Ø 165mm 22 teeth		F514100150010 F178100150090 F178100150100	
HF08007	Actuating unit thickness 33mm	Farmer Serie 100	F278110150020	
HF08008	Spring		F268100150040	
HF08005	Ball			
HF08009	Actuating unit thickness 57mm	Farmer Serie 300 / 500	E178100150019	
HF08010	Spring		F178100150070	
HF08005	Ball			

The listed spare parts are not original replacement parts. The original part-numbers (OEM) in this catalogue serve only to comparing purposes.

Fendt

non original parts	Order no.	Article description	Tractor model	Cross-Ref.
	HF08119	Brake disc (lined)	Farmer 409, 410, 411, 412 Favorit 711, 712, 714, 716, 816, 818, 822, 824, 916, 920, 924, 926	F822100150040
	HF08120	Intermediate disc		716150150500
	HF45015	Brake band width 25mm left	Farmer 2, 2E+D+DE, 4S, 5S	G139103070010
	HF45016	Brake band width 25mm right		G139103070020
	HF45017	Brake band width 30mm left	Farmer 102-103-104-105-106-107-108 ...S+LS+LSA, Farmer 200, 201, 202, 203, 204, 205 GT255, GT275 Farmer 4S, 5S,	H275100030122
	HF45018	Brake band width 30mm right		H275100030132

Tractor brake parts

The listed spare parts are not original replacement parts. The original part-numbers (OEM) in this catalogue serve only to comparing purposes.

Order no.	Article description	Tractor model	Cross-Ref.	non original parts
HF08015	Actuation cylinder Ø 22mm	105-106-108S-LS-LSA F275GT	X800120550000	
HF08016	Repair kit		X800120520030	
HF08017	Actuation cylinder	Farmer: 305-312 Favorite: 209-515 GT370-395 Xylon 520, 522, 524	G524100070050	
HF08018	Repair kit		F198104070080	
HF08019	Actuation cylinder	Farmer 310, 311 F380GT	G380132070250	
HF08020	Repair kit		G380132070010	
HF08021	Wheel brake cylinder Ø 31mm	200, 240S, 250S+LE+VA 260VA+PA, 270PA, 275VA, 280PA, 303, 304,305,307, F275+ 345+360+365GT	G158100150020	
HF08022	Repair kit		F158100150120	
HF08023	Wheel brake cylinder Ø 31mm	Favorit 612, GT250	F250100060120	
HF08024	Wheel brake cylinder Ø 31mm	260S, 275S, 280S	G246100150010	
HF08142	Repair kit			

The listed spare parts are not original replacement parts. The original part-numbers (OEM) in this catalogue serve only to comparing purposes.

Fendt

non original parts	Order no.	Article description	Tractor model	Cross-Ref.
	HF08025	Wheel brake cylinder brake 250x60 Ø 22 mm	Favorit 600-610-611-612-624-615 LSA	F182100150190
	HF08026	Repair kit		F182100150210
	HF08027	Wheel cylinder brake 270x80 Ø 38 mm		F184108150140
	HF08028	Repair kit		F284100070140
	HF08029	Wheel brake cylinder Ø 31mm right	260VA+PA, 270PA, 275VA, 280PA, 303, 304, 305, 306, 307, 309, GT380	F192101070060
	HF08030	Wheel brake cylinder Ø 31mm left		F192101070050
	HF08031	Repair kit		F192101070070
	HF08032	Wheel brake cylinder Ø 28mm right		F178101070070
	HF08033	Wheel brake cylinder Ø 28mm left		F178101070060
	HF08034	Repair kit		F178101070080
	HF08035	Brake master cylinder Ø 15mm Girling	Farmer 105S+LS+LSA, 106S+LSA Farmer 108S+LS+LSA	X800120510000
	HF08036	Repair kit		X800120510010
	HF08037	Brake master cylinder Ø 15mm Girling	Farmer 240S, 250S+LE+VA, 260VA+PA+S, 270PA, 275VA 275S, 280PA Farmer 303, 304, 305, 307	G152109070110
	HF08038	Repair kit		F158100070010

Tractor brake parts

The listed spare parts are not original replacement parts. The original part-numbers (OEM) in this catalogue serve only to comparing purposes.

Order no.	Article description	Tractor model	Cross-Ref.	non original parts
HF08039	Brake master cylinder Ø 19mm	Farmer 240S, 250S,250LE+VA, 260VA+PA+S, 270PA, 275VA, 275S, 280PA, 303, 304, 305, 306, 307, 308, 309, 310, 311 F345GT, F350GT, F360GT, F370GT	G178109070110	
HF08040	Repair kit Girling		Cast number on the cylinder 22mm	
HF08041	Brake master cylinder Ø 22mm			
HF08042	Repair kit Girling		32660545	
HF08043	Brake master cylinder Ø 22mm	Farmer 306, 307, 308, 309, 310, 311, 312 F370-380-390-395GT	G395100070100	
HF08044	Repair kit		F198104070070	
HF08045	Brake master cylinder Ø 22mm	Farmer 308, 309, 310, 311, 312 from No. 312/21 on Farmer Serie 500 Xylon 520, 522, 524	G312100070050	
HF08044	Repair kit		F198104070070	
HF08046	Brake master cylinder Ø 22mm mineral oil	Farmer 409, 410, 411, 412, Xylon 520, 522, 524 711, 712, 714, 716, 718, 815, 816, 817, 818, 820, 822, 824, 916, 920, 924, 926, 930	G822100070030	
HF08047	Repair kit		F822100070070	
HF08048	Brake master cyl. Ø 19mm	F275GT	G279100070100	
HF08049	Repair kit			

The listed spare parts are not original replacement parts. The original part-numbers (OEM) in this catalogue serve only to comparing purposes.

Fendt

non original parts	Order no.	Article description	Tractor model	Cross-Ref.
	HF08050	Brake master cylinder Ø 28mm	F345-360-365-380GT	G345101070100
	HF08121	Repair kit		F345100070010
	HF08051	Brake master cylinder Ø 19mm	Favorit 600, 610, 611, 612, 614, 615, 282 S	F281100070030
	HF08052	Brake master cylinder Ø 22mm	Favorit 600, 610, 611, 612, 614, 615, 282 S	F281104070010
	HF08053	Brake master cylinder Ø 25mm	F345-360-365-380GT GT380	G345100070100
	HF08121	Repair kit		F345100070010
	HF08122	Brake master cylinder	4S, 10S, 11S, 12S, 610S, 611S, 612S, 614S	F181100070010
	HF08054	Clutch master cylinder Ø 20mm	303-304-305-306-307-308-309-310-311-312 F345-350-360-365-370-380-390-395GT	G198100100030
	HF08132	Repair kit		F178100100010
	HF08055	Clutch master cylinder Ø 20mm	308, 309, 310, 311, 312 from chassis no. on: FW308-312	G312100100020
	HF08132	Repair kit		F178100100010

Tractor brake parts

The listed spare parts are not original replacement parts. The original part-numbers (OEM) in this catalogue serve only to comparing purposes.

Order no.	Article description	Tractor model	Cross-Ref.	non original parts
HF08056	Clutch master cylinder Ø 22mm	Favorit 509-510-511-512-514-515	G514100100041	
HF08133	Repair kit		F514100100450	
HF08057	Clutch master Ø 23mm	600LS, 610S+LSA, 611S+LSA 612SA+LSA, 614LSA, 615LSA from chassis no. on: FW181-285	G385100100050	
HF08123	Repair kit		F281100100160	
HF08058	Clutch master Ø 22mm mineral oil	Farmer 409-410-411-412, Favorit 711-712-714-716-916-918-920-924-926, Fendt 815-817-818-930, Xylon 520, 522, 524	G524100100051	
HF08124	Repair kit		F524100100010	
HF08059	Clutch master Ø 28mm mineral oil	816-818-822-824 Turbo	G822100100041	
HF08125	Repair kit		F822100100020	
HF08060	Clutch slave Ø 38mm	303-304-305-306-307-308-309-310-311-312 600LS, 610S+LSA, 611S+LSA 612SA+LSA, 614LSA, 615LSA	G178100100061	
HF08127	Repair kit without piston		F178100100140	
HF08126	Repair kit with piston		F178100100030	
HF08061	Clutch slave Ø 38mm	611-612-614-615 LSA from chassis no. on: FWA382-385	G385100100020	
HF08128	Repair kit		F345100100010	
HF08062	Clutch slave Ø 38mm	F345-360-365-380-390-395GT	G345100100060	

The listed spare parts are not original replacement parts. The original part-numbers (OEM) in this catalogue serve only to comparing purposes.

Fendt

non original parts	Order no.	Article description	Tractor model	Cross-Ref.
	HF08063	Brake fluid tank 1 connection	Farmer Serie 300 Favorit Serie 500	G312100070060
	HF08064	Brake fluid tank 2 connections	Farmer Serie 300 Favorit Serie 500 Serie GT Xylon 520, 522, 524	F281100070020
	HF50013	Brake pad (2pcs) 90x15x71mm cardan brake	Farmer 303-312 Favorit 509-515 Farmer 240, 250, 260, 270, 275, GT 365, 380, 390, 395 Xylon 520, 522, 524	F198104072011
	HF50014	Brake pad (2pcs) 90x15x71mm cardan brake		F198104072010 old
	HF50001	Brake pad (2pcs) 78.5x66x15mm cardan brake	Favorit 600LS, 610LS, 611LS, 612LS 614LS, 615LS	F284100070131
	HF50009	Brake pad (2pcs) 98x68x15mm with wear indicator	Favorit 611LSA, 612LSA, 614LSA 615LSA	F385100070010
	HF50002	Brake pad (2pcs) 98x68x15mm without wear indicator		F385103070010
	HF08129	Accessory set		

Tractor brake parts

The listed spare parts are not original replacement parts. The original part-numbers (OEM) in this catalogue serve only to comparing purposes.

Order no.	Article description	Tractor model	Cross-Ref.	non original parts
HF08068	Brake caliper disc 22mm	Farmer 303-304-305-306-307-308-309-310-311-LSA 380GTA	G178114070120	
HF08069	Repair kit without piston		F178107070080	
HF08070	Repair kit with piston			
HF08071	Brake caliper disc 31mm	Farmer 307-308-309-310-311-312LSA Favorit 500, 510, 511, 512, 514, 515	G198104072100	
HF08069	Repair kit		F178107070080	
HF08072	Brake disc 260mm / 6-holes / 31mm	Farmer 307-308-309-310-311-312LSA Favorit 509-510-511-512-514-515 GT 365, 370, 380, 390, 395	11910207050	
HF08073	Brake disc 260mm / 6-holes / 22mm		117103070050	
HF08074	Brake disc 260mm / 8-holes / 22mm	Farmer 309LSA, 310LSA, 311LSA GT365, GT380	198104070041	
HF08143	Brake disc 224mm / 22mm		246105070010	
HF08144	Brake disc 260mm / 8-holes / 31mm		380132070012	

The listed spare parts are not original replacement parts. The original part-numbers (OEM) in this catalogue serve only to comparing purposes.

Fendt

non original parts	Order no.	Article description	Tractor model	Cross-Ref.
	HF08075	Brake disc 260mm / 8-holes / thickness 13mm	Farmer 303LSA, 304LSA, 305LSA 306LSA, 308LSA, 309LSA	178107070010
	HF08076	Brake disc 274mm / 8-holes / thickness 13mm	Favorit 611-615	281101070010
	HF08077	Brake disc 260mm / 6-holes / thickness 40mm	Favorit 524	524101070012
	HF08078	Brake drum	Farmer 2, 2E, 2D, 2DE	F139103070060
	HF08079	Brake drum	Farmer 2S, 3S, 4S, 102S+LS, 103S+LS, 104S+LS, 200S+V, 201S, 203P, 204P+V	F138110150140 F138107150020
	HF08130	Brake drum	5S, 105, 106, 108	268100150040

Tractor brake parts

The listed spare parts are not original replacement parts. The original part-numbers (OEM) in this catalogue serve only to comparing purposes.

Order no.	Article description	Tractor model	Cross-Ref.	non original parts
HF08080	Brake drum hand brake 250x30/40 foot brake 250x60/70	Favorit 610-611-612-614-615 LS+LSA	F180100150210	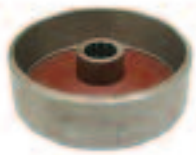
HF08081	Brake drum hand brake 250x30/40 foot brake 270x80		F184108150130	
HF30009	Brake lining hand brake 30x4x190 7-holes	Farmer 1 GT220, 225, 230, 231	F025100070402	
HF30001	Brake lining (for brake band) hand brake 20x4x235 8-holes	Farmer 2, 2E, 2D, 2DE		
HF30064	Brake lining (for brake band) hand brake 30x4x190	Farmer 102-103-104-105-106-107-108 ...S+LS+LSA, Farmer 200, 201, 202, 203, 204, 205 GT255, GT275 Farmer 4S, 5S		
HF30008	Brake lining 40x5x272 10-holes	Favorit 1, 2, 3		
HF30027	Brake lining foot brake 50x4x174 8-holes	Farmer 2, 2S	F139103070085	

The listed spare parts are not original replacement parts. The original part-numbers (OEM) in this catalogue serve only to comparing purposes.

Fendt

non original parts	Order no.	Article description	Tractor model	Cross-Ref.
	HF30037	Brake lining foot brake 60x5x187 10-holes	Farmer240,250,260, 270,280S+V+P,303, 304,305,307 LS+LSA GT345, 360,365,2-4S 102,103,104,105,S+L S, 200,201,203,204, 205,V+S+P,GT255	138110150171 135110150170
	HF30048	Brake lining foot brake 60x5x272 14-holes	Favorit 600 - 615	
	HF30022	Brake lining long 50x6x327 16-holes	Farmer 1, Dieselross 12-15-17-18-20-22-24-GT220, 225, 230, 231	F231101070081
	HF30021	Brake lining short 50x6x288 14-holes		F231101070091
	HF30044	Brake lining long 60x6x370 16-holes	Dieselross 25, 28, FW243	
	HF30035	Brake lining short 60x6x287 12-holes		
	HF30030	Brake lining long 60x8x435 16-holes	F 40	
	HF30031	Brake lining short 60x8x324 12-holes		
	HF30059	Brake lining 75x5x260 12-holes	240S, 250S, 260P, 270P, 275S, 280P Farmer 303, 304, 305, 306, 307, 308, 309, 310, 311 F345-350-360-370-380GT	

Tractor brake parts

The listed spare parts are not original replacement parts. The original part-numbers (OEM) in this catalogue serve only to comparing purposes.

Order no.	Article description	Tractor model	Cross-Ref.	non original parts
HF45019	Brake shoe (complete) 180x30 hand brake	Farmer1,240,250,260, 270,275 S+P+V 303, 304, 305, 306, 307, 308, 309, 310, 311 LS+LSA, GT220, 225, 230, 231, 260, 360, 365, 380, 390, 395, 509, 510, 511, 512, 514, 515	H205100150010	
HF08131	Tension spring		F135112150020	
HF45007	Brake shoe (complete) 180x40 hand brake	Farmer 309, 310, 311, 312 LS + LSA Favorit 509, 510, 511, 512, 514, 515C, GT 370, 380, 390, 395	H199100150100	
HF08131	Tension spring		F135112150020	
HF45008	Brake shoe (complete) 180x60 foot brake old version	2-4 S, 102, 103, 104, 105, S+LS 200, 201, 203, 204, 205, V+S+P GT255	H138110150053 H138110150052 H138110150050	
HF08131	Tension spring		F135112150020	
HF45020	Brake shoe (complete) 180x60 foot brake new version	Farmer 240,250,260,270,280 S+V+P 303, 304, 305, 307 LS+LSA GT345, 360, 365	246100150220	
HF08131	Tension spring		F135112150020	
HF45021	Brake shoe (complete) 180x60 foot brake	Farmer 250V, 260V, 270V, 275V, 280V	H205100150020	
HF08131	Tension spring		F135112150020	
HF45002	Brake shoe (complete) 250x40 hand brake	Favorit 4S, 10S, 11S, 12S, 610S, 611S	F180100150352	

The listed spare parts are not original replacement parts. The original part-numbers (OEM) in this catalogue serve only to comparing purposes.

Fendt

non original parts	Order no.	Article description	Tractor model	Cross-Ref.
	HF45013	Brake shoe (complete) 279.5x75 left	240S, 250S, 260P, 270P, 275S, 280P Farmer 303, 304, 305, 306, 307, 308, 309, 310, 311 F345-350-360-370-380GT	F192101070030
	HF45014	Brake shoe (complete) 279.5x75 right		F192101070040
	HF45011	Brake shoe (complete) 300x50	Farmer 1 F220-225-230-231GT	F231101070031 F231101070041 F231101070081 F231101070091
	HF08086	Brake shoe (complete) 300x60	F250GT	F250100060110
	HF45001	Brake shoe (complete) 250x30 hand brake	Favorit 611-612-614-615LS+LSA	F184108150290
	HF45002	Brake shoe (complete) 250x40 hand brake		F382103150030 F180100150352
	HF45128	Brake shoe (complete) 180x50	2D, 2DE, 2E, 2S	F228100070073
	HF45129	Brake shoe (complete) 180x60	240S, 250S, 260PA, 260S, 270PA, 275S, 280LS, 280PA, 304, 305, GT345, GT350, GT360, GT365, GT370	246100150300

Tractor brake parts

The listed spare parts are not original replacement parts. The original part-numbers (OEM) in this catalogue serve only to comparing purposes.

Order no.	Article description	Tractor model	Cross-Ref.	non original parts
HF45003	Brake shoe (complete) 250x60 foot brake	Favorit 611-612-614-615LS+LSA	F182100150180	
HF45004	Brake shoe (complete) 250x70 foot brake		F180100150281	
HF45005	Brake shoe (complete) 270x80 foot brake		F382103150010 F184108150270	
HF03069	Tension spring 1 pc per wheel		F184108150280	
HF03071	Tension spring 2 pcs per wheel for 250x30/40		F382103150040	
HF08088	Intermediate disc front PTO clutch 139.4x81x2.5 25 teeth (4 pieces)	Farmer Serie 100 (FW 135-278) Farmer Serie 200 (FW 144-176) Farmer Serie 300 (FW 152-199) F360-365-370-380-390-395GT	238108220300	
HF08089	Washer front PTO clutch 153.5x98.2x3.3 8 teeth (6 pieces)		205100200500 182111200130	

The listed spare parts are not original replacement parts. The original part-numbers (OEM) in this catalogue serve only to comparing purposes.

Fendt

non original parts	Order no.	Article description	Tractor model	Cross-Ref.
	HF08090	Intermediate disc (7 pcs) thickness 2.5 front PTO clutch / 167.5x105 / 44 teeth	Favorit 816, 818, 822, 824 Favorit 916, 922, 924, 926	178100220510
	HF08091	Intermediate disc (2pcs) thickness 2.7 front PTO clutch / 167.5x105 / 44 teeth		178100220520
	HF08092	Washer (8 pieces) front PTO clutch / 6 teeth 180.8x105.2x3.5		178100220540
	HF08093	Intermediate disc (5, 8, 9 pcs) thickness 2.5 front PTO clutch / 139.4x81 / 25 teeth	Favorit 10, 11, 12 Farmer 102, 103, 104, 105, 106, 108 Favorit 600, 610, 612, 614, 615 - LSA	238108220330
	HF08094	Intermediate disc (10, 12 pcs) thickness 2.0 front PTO clutch / 139.4x81 / 25 teeth		138105220250
	HF08095	Intermediate disc (2 pcs) thickness 2.7 front PTO clutch / 139.4x81 / 25 teeth		178100200010
	HF08089	Washer (6 pieces) front PTO clutch / 8 teeth 153.5x98.2x3.3		205100200500 182111200130
	HF08090	Intermediate disc (5 pieces) front PTO clutch / 44 teeth 167.5x105x2.5	Farmer 309, 311, 312	178100220510
	HF08092	Washer (5 pieces) front PTO clutch / 6 teeth 180.8x105.2x3.5		178100220540
	HF08096	Clutch cable length 1280mm	Farmer 303, 304, 305, 306, 307, 308, 309	G178138350010

Tractor brake parts

The listed spare parts are not original replacement parts. The original part-numbers (OEM) in this catalogue serve only to comparing purposes.

Order no.	Article description	Tractor model	Cross-Ref.	non original parts
HF08097	Clutch cable length 1365mm	Farmer 310, 311, 312	G178100350010	
HF08098	Clutch cable length 2445mm	Farmer 303, 304, 305, 306, 307, 308, 309, 310	G117100200020	

The listed spare parts are not original replacement parts. The original part-numbers (OEM) in this catalogue serve only to comparing purposes.

Fiat

non original parts	Order no.	Article description	Tractor model	Cross-Ref.
	HF09001	Metal disc 111mm 21 teeth	55-66,55-88, 55-90, 60-66, 60-88, 60-90, 60-93, 60-94, 65-66, 65-88, 65-90, 65-93, 65-94, 70-66, 70-88, 70-90, 72-86, 72-93, 72-94, 80-66, 80-88, 80-90, 82-93, 82-94, 85-90, 88-93, 88-94, L60, L65, L75, L85, L95	5118101
	HF09002	Brake pad (1 piece) Lining one side		5130783 5118095
	HF09003	Brake pad (1 piece) Lining both sides		5130785 5118100
	HF09032	Metal disc 167.5mm 34 teeth 7mm	90-90,100-90, 110-90	5112630
	HF09033	Metal disc 168mm 34 teeth 3mm	570,580,670,680,780, 840,850,880, 980,1180,1280,1380, 1580,1880	44019288
	HF09034	Metal disc 170mm 34 teeth 14mm		2024519
	HF09004	Metal disc 215mm 52 teeth	115-90,130-90, 140-90,160-90,180-90	5111276 5146315
	HF09032	Metal disc 214.7mm 52 teeth 7mm	F100+110+115+120+130+140, M100+110+120+130+160	5146036
	HF09005	Brake pad lining one side		5104773 5158120 5158941
	HF09006	Brake pad lining both sides		5158123 5158942 5104774

Tractor brake parts

The listed spare parts are not original replacement parts. The original part-numbers (OEM) in this catalogue serve only to comparing purposes.

Order no.	Article description	Tractor model	Cross-Ref.	non original parts
HF09007	Brake disc (lined) Ø 165mm 22 teeth	466,566,666,766, 45-66, 50-66, 55-66, 60-66, 65-66, 70-66, 80-66	5123165 5159830 5119329	
HF09008	Intermediate disc Ø 172mm		5119327	
HF09009	Actuating unit		5129473	
HF09010	Brake disc (lined) Ø 260mm 14 teeth	580, 680, 780 55-88, 55-90, 60-88, 60-90, 60-94, 65-88, 65-90, 65-94, 70-88, 70-90, 72-94, 80-88, 80-90, 82-94, 85-90, 88-94, L60,L65,L75,L85,L95	4997208 5184313	
HF09011	Intermediate disc Ø 235mm		5110138 5191349	
HF09012	Brake disc (lined) Ø 280mm 26 teeth	880,1000,1300	8995071 44011292	
HF09013	Intermediate disc Ø 286mm		8995072 44011293	

The listed spare parts are not original replacement parts. The original part-numbers (OEM) in this catalogue serve only to comparing purposes.

Fiat

non original parts	Order no.	Article description	Tractor model	Cross-Ref.
	HF09014	Brake disc (lined) Ø 304mm 14 teeth	840, 850, 880, 980 90-90, 100-90, 110-90	4993585
	HF09015	Intermediate disc Ø 374mm		5110139
	HF09016	Brake disc (lined) Ø 325mm 14 teeth	F100, 110, 115, 120, 130, 140	5154521
	HF09017	Brake disc (lined) Ø 365mm 13 teeth	1180, 1280, 1380, 1580, 1880, 115-90, 130-90, 140-90, 160-90, 180-90,	5102783
	HF09018	Intermediate disc Ø 445mm		5111281
	HF09019	Hand brake cable length 385mm	1180, 1380, 1580,1880, 160-90DT, 180-90DT, 115-90DT, 130-90DT, 140-90DT, 8430, 8630, 8830	5111687

Tractor brake parts

The listed spare parts are not original replacement parts. The original part-numbers (OEM) in this catalogue serve only to comparing purposes.

Order no.	Article description	Tractor model	Cross-Ref.	non original parts
HF09020	Hand brake cable length 690mm	55-88, 55-90, 60-56, 60-66, 60-88, 60-90, 60-93, 60-94, 65-88, 65-90, 65-93, 65-94, 70-88, 70-90, 72-93, 72-94, 80-88, 80-90, 82-93, 82-94, 85-90, 88-93, 88-94	5125736	
HF09021	Hand brake cable length 750mm	L60, L65, L75, L85, L95, TL 70, 80, 90, 100 4635, 4835, 7635	5171397 5173940 5174125 5183158	
HF09022	Brake disc (lined) Ø 230mm	Som. 40, 45, 50, 511, 612, 615, 650, 670, 715, 750	9023259 44092218	
HF09023	Brake band hand brake 50x6	311R, 312, 315, 331R, 411R, 415, 450, 480 (for 6 gears)	582691 4996433 593871 5161239	
HF09024	Brake band hand brake 50x6	400, 440, 450, 480 (for 8 gears), 500, 540, 550, 600, 640	4963008 5012203 5107956 4980314	
HF09025	Brake band hand brake 56x6	440, 446, 450, 480, 500, 540, 640, 55-46, 60-46, 65-46	5107958 5160714 5112685 5112684	

The listed spare parts are not original replacement parts. The original part-numbers (OEM) in this catalogue serve only to comparing purposes.

Fiat

non original parts	Order no.	Article description	Tractor model	Cross-Ref.
	HF09026	Brake drum	400, 415, 446, 450, 480, 500, 540, 550, 600, 640	4980824
	HF09027	Brake master cylinder	55-80, 60-88, 60-90, 65-88, 65-88, 65-90, 70-88, 70-90, 72-94, 80-88, 80-90, 82-94, 85-90, 90-90, 100-90, 110-90, 115-90, 130-90, 140-90, 160-90, 180-90	5103926 5111685 5103927
	HF09028	Clutch master without plug connection	70-90DT, 72-94DT, 80-90DT, 82-94DT, 115-90, 130-90, 140-90, 160-90, 180-90	5119606
	HF09029	Clutch master with plug connection	F100, 110, 115, 120, 130, 140 M100, 115, 135	5150299
	HF09030	Brake master cylinder	L60, 65, 75, 85, 95 M100, 115, 135, 160 TM115, 120, 125, 130, 135, 140, 150, 155, TM165, 180	82018664 82006194
	HF09031	Slave cylinder	70-90DT, 72-94DT, 80-90DT, 82-94DT, 115-90, 130-90, 140-90, 160-90, 180-90, F100, 110, 115, 120, 130, 140, M100, 115, 135, TM115, 135	5119605 5177914

Tractor brake parts

The listed spare parts are not original replacement parts. The original part-numbers (OEM) in this catalogue serve only to comparing purposes.

Order no.	Article description	Tractor model	Cross-Ref.	non original parts
HF35008	Disc lining set 102x51x4.8 4 pieces + rivets	2000, 3000, 4000, 5000, 7000, 2310, 2600, 2610, 2810, 2910, 3600, 3610, 3900, 4100, 4110, 4600, 4610, 5600, 5700, 6600, 6700, 7600, 7700, 5110, 5610, 6410, 6610, 6710, 6810, 7410, 7610, 7710, with cab, without All-wheel Drive		
HF10001	Brake disc (lined) Ø 102mm 23 teeth	5610, 6610, 7610 up to MY 9/85 without cab, without All-wheel Drive 5640, 6640, 7740, 7840, 8240, 8340 40Km/h TS90, TS100, TS110 up to C3945 switchable PTO, with hand brake	D5NN2N625A E9NN2N625AB 83906199 81867258	
HF10002	Actuating unit Ø 102mm		C5NN2N623B 81825525	
HF35003	Brake lining set 165x89x4.7 4 pieces + rivets	Major, Super Major from MY 11/60 on	81802526 E1ADDN2284	
HF10003	Brake disc (lined) Ø 165mm 22 teeth		81717001 E99FB9	
HF10004	Actuating unit Ø 165mm			

The listed spare parts are not original replacement parts. The original part-numbers (OEM) in this catalogue serve only to comparing purposes.

Ford

non original parts	Order no.	Article description	Tractor model	Cross-Ref.
	HF35009	Disc lining set 4 pieces + rivets 127x70x4.7 hand brake	TX30, 32, 34, 36 TC 52, 55, 56, 57 TF 42, 44, 46	
	HF35004	Disc lining set 4 pieces + rivets 178x101x4.8 foot brake		
	HF10005	Brake disc (lined) 27 teeth		89512098
	HF10006	Actuating unit Ø 178mm		
	HF10007	Brake disc (lined) Ø 203mm 22 teeth	2810, 2910, 3910, 4110, 4410, 4610, 3900, 4000, 4100, 4200, 4400, 4500, 4600	C5NN2AD97B 81802479
	HF10008	Intermediate disc		C5NN2N31513 81802536

Tractor brake parts

The listed spare parts are not original replacement parts. The original part-numbers (OEM) in this catalogue serve only to comparing purposes.

Order no.	Article description	Tractor model	Cross-Ref.	non original parts
HF10009	Actuating unit Ø 203mm	2810, 2910, 3910, 4110, 4610 up to MY 6/88, 3900, 4100, 4600	D5NN2N317A 83908972	
HF10010	Brake disc (lined) Ø 203mm 22 teeth	3230, 3430, 3930, 4130, 4630, 4830, 5030	E9NN2A097AA 83908952	
HF10008	Intermediate disc		C5NN2N31513 81802536	
HF10014	Brake disc Ø 222mm 22 teeth	5000, 5600, 5700, 6600, 6700, 7000, 7600, 7700, 5110, 5610, 6410, 6610, 6710, 6810, 7410, 7610, 7710, 7810 without cab+hydraul. trailer, without hand/foot brake	C7NN2A097B 81818854	
HF10015	Intermediate disc		C5NN2N315A 81802535	
HF10016	Actuating unit Ø 222mm	5000 up to MY 12/68	C5NN2N317A 83908952	
HF10017	Actuating unit Ø 222mm	5000 from MY 1/69 on 7810, 7910, 8210, others see above up to MY 5/88	C7NN2N317A 83909808	

The listed spare parts are not original replacement parts. The original part-numbers (OEM) in this catalogue serve only to comparing purposes.

Ford

non original parts	Order no.	Article description	Tractor model	Cross-Ref.
	HF10018	Actuating unit 222mm	from MY 6/88 on 5000, 5600, 5700, 6600, 6700, 7000, 7600, 7700, 5110, 5610, 6410, 6610, 6710, 6810, 7410, 7610, 7710, 7810 without cab+hydraul. trailer, without hand/foot brake	E7NN2N317CA E6NN2N317AA 83963598 83956597
	HF10019	Brake disc (lined) oilbath 222mm 22 teeth	5610S, 6610S, 6810S, 7010, 7610S, 7810S, 8010, 5640, 6640, 7740, 7840, 8240, 8340, TS80, 90, 100, 110 me.+hy.	E9NN2A097BA 83989830
	HF10020	Intermediate disc mechanical brake		E6NN2N315AA 83956598
	HF10021	Intermediate disc hydraulic brake		81866478
	HF10030	Actuating unit 222mm mechanical brake		E7NN2N317CA E6NN2N317AA 83963598 83956597 957E2021B
	HF10022	Brake disc (lined) oilbath	8530, 8630, 8730, 8830, 8670, 8770, 8870, 8970, TW5, 10, 15, 20, 25, 30, 35	86014787

Tractor brake parts

The listed spare parts are not original replacement parts. The original part-numbers (OEM) in this catalogue serve only to comparing purposes.

Order no.	Article description	Tractor model	Cross-Ref.	non original parts
HF10011	Brake master cylinder	5640, 6640, 7740, 7840, 8240, 8340, TS90, 100, 110, 115	81869963	
HF10012	Repair kit		81869958	
HF10031	Brake master cylinder	4635, 4835, 5635, 6635, 7635, 8160, 8260, 8360, 8560, TL70, 80, 90, 100	82018664 82006194	
HF10032	Wheel brake cylinder	5640, 6640, 7740, 7840, 8240, 8340, TS90, 100, 110, 115	83997398 E9NN2N448AB	
HF10033	Clutch master	5640, 6640, 7740, 7840, 8240, 8340, TS90, 100, 110, 115	81867084	
HF10034	Clutch master	8160, 8260, 8360	5150299	
HF10035	Clutch slave		5177914	

The listed spare parts are not original replacement parts. The original part-numbers (OEM) in this catalogue serve only to comparing purposes.

Ford

non original parts	Order no.	Article description	Tractor model	Cross-Ref.
	HF30056	Brake lining 355x51	Dextra, Super Dextra	81717321
	HF15049	Brake shoe (complete)		81717317
	HF30078	Brake lining 355x38	2000, 2100, 2110, 2120, 2130, 2600, 2610, 3000, 3100, 3120, 3300, 3310, 3330, 3400, 3500, 3600, 3610, 4000, 4110	81814147
	HF15050	Brake shoe (complete)		D9NN2218AA F2NN2218AA 83924863 81877080
	HF10027	Hand brake cable one-cable system 1834mm	2310, 2600, 2610, 3600, 3610, 4100, 4110, 4600, 5600, 5700, 6600, 6700, 6710, 7600, 7700, 7710, 7810, 8210, 2810, 2910, 3910, 4110, 4610 up to MY 12/82)	83918382
	HF10028	Hand brake cable double-cable system 680mm	2610,3610,5110,5610 5900,6410,6610,6710 6810,7410,7610,7710 7810,7910,8210, (2810,2910,3910, 4110, 4610 of MY 81-88)	83971685
	HF10029	Hand brake cable double-cable system 1848mm	2610,3610,5110,5610 5900,6410,6610,6710 6810,7410,7610,7710 7810,7910,8210, (2810,2910,3910,4110, 4610 of MY 81-88)	83957515

The listed spare parts are not original replacement parts. The original part-numbers (OEM) in this catalogue serve only to comparing purposes.

Order no.	Article description	Tractor model	Cross-Ref.	non original parts
HF30002	Brake lining 20x4x200 8-holes	G15, Tessin, Burgund, A2A, A2B, A2D, A2K, A2L, A2W, A3K, A10, ABL, ABN, AX, AK, ALK, AZK, ADK, ADN, AF15, ALD, ADS, ADL, ADA, ABS, ALB	drum size 180x20	
HF40001	Rivets 3x8			
HF30009	Brake lining 30x4x188 7-holes	A2 B+D+DL+K+KN, A3 K+KT, A10, AF15, AF20, AB, ABN, ABS, ADA, ADK, ADL, ADN, ADS, AK, ALB, ALD, ALK, AZK, VK, A28, AF30, AFN, AFS, G50, A, S, AS, G15, G25, G35, G40	drum size 180x30	
HF40001	Rivets 3x8			
HF30006	Brake lining 40x4.5x190 7-holes	G15, G25, G30, G40, G45, AK, ALK, AZK, A2K, ADK, ADN, AF15, ALD, ADS, ADL, A2D, AF20, ADA, ABS, ALB, ABL, A3K, ABN, AB, A2B, A2A, A2D, A2L, A2W, A4M	drum size 180x40	
HF40001	Rivets 3x8			
HF30019	Brake lining 50x4.7x190 8-holes		drum size 180x50	
HF40003	Rivets 4x8			
HF30027	Brake lining 50x4.5x172 8-holes		drum size 180x50	
HF40003	Rivets 4x8			
HF30026	Brake lining 50x5x192 10-holes	G25, 30, 35, 40, 45 (foot brake), ZF Transmission A208, A208III, A210II, A210III, A212 (not for vehicles before MY64 with band brake)	drum size 200x50	
HF40004	Rivets 4x10			

The listed spare parts are not original replacement parts. The original part-numbers (OEM) in this catalogue serve only to comparing purposes.

Güldner

non original parts	Order no.	Article description	Tractor model	Cross-Ref.
	HF30008	Brake lining 40x5x270 10-holes	G50, G60	drum size 250x40
	HF40004	Rivets 4x10		
	HF30024	Brake lining long 50x6x327 16-holes	A 3 P	drum size 300x50
	HF30021	Brake lining short 50x6x287 14-holes		
	HF40004	Rivets 4x10		
	HF30044	Brake lining long 60x6x382 16-holes	A28, AF30, AFN, AFS	drum size 350x60
	HF40004	Rivets 4x10		

Tractor brake parts

The listed spare parts are not original replacement parts. The original part-numbers (OEM) in this catalogue serve only to comparing purposes.

Order no.	Article description	Tractor model	Cross-Ref.	non original parts
HF30009	Brake lining 30x4x188 7-holes	C 115 Greif	drum size 180x30	
HF40001	Rivets 3x8			
HF30006	Brake lining 40x4.5x190 7-holes		drum size 180x40	
HF40001	Rivets 3x8			
HF30007	Brake lining 30x4x240 7-holes	Hand brake C220, R22-25-27-28-35, R324-430-435-442-445-540-600	drum size 200x30	
HF40003	Rivets 4x8			
HF30008	Brake lining 40x5x270 10-holes	Hand brake R40-45-55, R450-455-460-545, Robust 800, ATK	drum size 250x40	
HF40004	Rivets 4x10			
HF30025	Brake lining 14-holes	R217, R420, R425, R 16, R 19	drum size 300x50 312120037	
HF30044	Brake lining long 60x6x350 16-holes	Foot brake C220, R22-25-27-28-35, R324-430-435-445-540	drum size 350x60	
HF40004	Rivets 4x10			
HF30030	Brake lining long 60x8x435 16-holes	Foot brake R435-440 Robust-Brillant 600 Brillant	drum size 400x60	
HF40007	Rivets 5x12			

The listed spare parts are not original replacement parts. The original part-numbers (OEM) in this catalogue serve only to comparing purposes.

Hanomag

non original parts	Order no.	Article description	Tractor model	Cross-Ref.
	HF30045	Brake lining long 80x8x435 16-holes	R40, RD40, R45, R55, R450, R455, R460, R545, Robust 800	drum size 400x80
	HF40015	Rivets 5x20		
	HF28001	Brake shoe complete	R22, R25, R27, R28, R324, R332, R35, R35/45, R435, R435/45, Brilliant 600, Perfekt300/400, Perfekt 301, 401, 401E, Granit 500, 500/1, 501, 501E	drum size 250x40
	HF28002	Brake shoe complete		
	HF35012	Disc lining set Ø 152, 10-holes 4 pieces + rivets	Brilliant 601, 701, Robust 901	
	HF35006	Disc lining set Ø 152, 12-holes 4 pieces + rivets		
	HF16005	Actuating unit Ø 152 mm		
	HF08015	Actuation cylinder		
	HF08016	Repair kit		
	HF35003	Disc lining set Ø 165 mm, foot brake 4 pieces + rivets		
	HF08007	Actuating unit foot brake		

Tractor brake parts

The listed spare parts are not original replacement parts. The original part-numbers (OEM) in this catalogue serve only to comparing purposes.

Order no.	Article description	Tractor model	Cross-Ref.	non original parts
HF28004	Brake master cylinder piston Ø 25.4 mm (only reconditioning)			
HF28005	Repair kit			
HF28003	Wheel brake cylinder	ATK		

The listed spare parts are not original replacement parts. The original part-numbers (OEM) in this catalogue serve only to comparing purposes.

Holder

non original parts	Order no.	Article description	Tractor model	Cross-Ref.
	HF30002	Brake lining 20x4x200 8-holes		drum size 180x20
	HF40001	Rivets 3x8		
	HF30009	Brake lining 30x4x188 7-holes	E5, E6, E8 B12, B25 A8B A20, A21, A45, A218 P50 AG3, AG35	drum size 180x30
	HF40001	Rivets 3x8		
	HF30065	Brake lining 35x4x155 10-holes	A218	drum size 180x35

Tractor brake parts

The listed spare parts are not original replacement parts. The original part-numbers (OEM) in this catalogue serve only to comparing purposes.

Order no.	Article description	Tractor model	Cross-Ref.	non original parts
HF35004	Disc lining set Ø 178mm with rivets	H345, H355, H360 (up to no. 00626)	13654350	
HF11001	Brake disc (lined) Ø 178mm 13 teeth		15854343	
HF11002	Actuating unit		13654323	
HF11003	Brake disc (lined) Ø 178mm 23 teeth oilbath+mechanical	H351, H355F, H361, H476F, H360 (from No. 00626 on), H470 (from No. 00627 on)	25654340/10 25654340	
HF11004	Metal disc Ø 184mm		25654560 17754750	
HF11005	Brake disc (lined) Ø 224mm 27 teeth oilbath front wheel	H496T, H466+468+476, H478+486+488+6136, H6115+6135 Elite, H6165+ 6190 Master, H5160+6160+6170T (for front + rear wheel)	22454340	
HF11006	Metal disc Ø 228mm		27543510	

The listed spare parts are not original replacement parts. The original part-numbers (OEM) in this catalogue serve only to comparing purposes.

Hürlimann

non original parts	Order no.	Article description	Tractor model	Cross-Ref.
	HF11007	Brake disc (lined) Ø 224mm 27 teeth oilbath + hydraulical or mechanical rear wheel	H5160, H6160 H6170T (up to No. 00161)	15454590
	HF11008	Metal disc Ø 228mm		15454600
	HF11009	Actuating unit Ø 224mm		15454610
	HF11010	Brake disc (lined) Ø 260mm 12 teeth oilbath	H480	17154342
	HF11011	Brake disc (lined) Ø 282mm 13 teeth oilbath+mechanical rear wheel	H356, H358, H358-4Club, H358 Prestige H466, H468	25554472/10
	HF11012	Brake disc (lined) Ø 282mm 12 teeth oilbath+mechanical rear wheel	H476, H478, H486, H488, H6115, H6135 Elite	44554472/10 00970672
	HF11013	Brake disc (lined) Ø 304mm 12 teeth oilbath+mechanical rear wheel	H490, H496T, H5110, H6136, H6165, H6190 Master	17054340

Tractor brake parts

The listed spare parts are not original replacement parts. The original part-numbers (OEM) in this catalogue serve only to comparing purposes.

Order no.	Article description	Tractor model	Cross-Ref.	non original parts
HF11014	Metal disc Ø 150mm 19 teeth hand brake	H358, H358-4Club, H356, H466, H468, H476, H478, H486T, H488, H5160, H6160, H6170T, H355, H360, H470, H480, H358-4 Prestige, H496T, H5110, H6136	25554520	
HF11015	Brake pad lining one side		17154512	
HF11016	Brake pad lining both sides		17154592	

The listed spare parts are not original replacement parts. The original part-numbers (OEM) in this catalogue serve only to comparing purposes.

Hürth Transmission / Axle

non original parts	Order no.	Article description	Tractor model	Cross-Ref.
	HF30009	Brake lining 30x4x188 7-holes		drum size 180x30
	HF40001	Rivets 3x8		
	HF30033	Brake lining 70x5x210 10-holes	for brake band	drum size 180x70
	HF40006	Rivets 5x10		
	HF30008	Brake lining 40x5x270 10-holes		drum size 250x40
	HF40004	Rivets 4x10		
	HF30021	Brake lining short 50x6x287 14-holes		drum size 300x50
	HF30022	Brake lining long 50x6x327 16-holes		
	HF40004	Rivets 4x10		
	HF30031	Brake lining short 60x8x324 12-holes		drum size 400x60
	HF30030	Brake lining long 50x6x436 16-holes		
	HF40007	Rivets 5x12		

Tractor brake parts

The listed spare parts are not original replacement parts. The original part-numbers (OEM) in this catalogue serve only to comparing purposes.

Order no.	Article description	Tractor model	Cross-Ref.	non original parts
HF12001	Brake pad hand brake 90x76x16.5 rear axle	Fast Truck 185-65, 2135, 2150, 3185, HMW-150	15/920117 454-04501	
HF12002	Brake pad hand brake	Fast Truck 1115, 1125, 1135, 2115, 2125, 2135, 2150, 3155, 3170, 3185, 3190, 3220	476/21218	
HF12003	Brake pad foot brake 117x83x19		15/920118 454-04401 20502 15/920396 15/920395	
HF12004	Brake pad		15/104300	
HF12005	Brake pad		15/920160	
HF12006	Brake pad		15/920159	
HF12007	Brake master cylinder 22mm	Fast Truck	PMM150	
HF12009	Brake disc rear axle	Fast Truck 185-65, 2135, 2150, 3185, HMW-150	454/03103	
HF12008	Brake disc front axle		454/02704	

The listed spare parts are not original replacement parts. The original part-numbers (OEM) in this catalogue serve only to comparing purposes.

John Deere

non original parts	Order no.	Article description	Tractor model	Cross-Ref.
	HF35001	Disc lining set 127mm 10-holes foot + hand brake	T300, 310, 500	D065G005 L12268 RL10169
	HF13001	Brake disc (lined) 34 teeth		
	HF13002	Brake disc (lined) 25 teeth		
	HF13003	Actuating unit		
	HF35012	Disc lining set 152x79x5 4 pieces with rivets	T700, T510-T710	AL13469
	HF13004	Brake disc (lined) 25 teeth		
	HF13005	Actuating unit		
	HF13046	Brake band	1350, 1850, 1950, 2250, 2450, 2650, 2850	AL38213, AT176621

Tractor brake parts

The listed spare parts are not original replacement parts. The original part-numbers (OEM) in this catalogue serve only to comparing purposes.

Order no.	Article description	Tractor model	Cross-Ref.	non original parts
HF13006	Brake disc (lined) Ø 306x10.2mm 12 teeth	820,830,920,930, 1020, 1030, 1120, 1130, 1630 (up to 300749), 1640, 1830 (up to 301445), 2020, 2030 (up to 301745), 2040, 2120, 2130, 2140	AZ40478 AT22034	
HF13007	Piston Ø 307mm height 37.8mm		L31016	
HF13008	O-ring		R50703, T22102	
HF13009	O-ring		R50704, T22103	
HF13010	Brake disc (lined) Ø 306x7.2mm 12 teeth	830, 840, 930, 940, 1030, 1040, 1130, 1140, 1550, 1630 (from 300750 on), 1640, 1750, 1830 (from 301446 on), 1840, 1850, 1950+N, 2030 (from 301746 on), 2040, 2040S (up to 370492), 2250, 2450	AL38234 AL29645	
HF13011	Piston Ø 307mm height 35.9mm		L33483	
HF13008	O-ring		R50703, T22102	
HF13009	O-ring		R50704, T22103	
HF13012	Piston Ø 307mm height 50mm		L33910	
HF13013	O-ring		L39803, L56243	
HF13014	O-ring		L39804, L56244	
HF13015	Brake disc (lined) Ø 306x4.9mm 12 teeth reinforced toothing	840, 940, 1040, 1140, 1350, 1550, 1640, 1750+V, 1840, 1850+F+V, 1950+F+N, 2040, 2250, 2450+F, 2650+F, 3050	AL65872 AL66796 AL66797 AL68507 AL68508	
HF13016	Piston Ø 307mm height 41mm		L63944 L60890	
HF13048	O-ring		L56246	
HF13049	O-ring		L60888	

The listed spare parts are not original replacement parts. The original part-numbers (OEM) in this catalogue serve only to comparing purposes.

John Deere

non original parts	Order no.	Article description	Tractor model	Cross-Ref.
	HF13017	Brake disc (lined) Ø 306x10.2mm 15 teeth	1640, 1840, 2040, 2040S (up to 370493), 2130, 2140, 2250, 2450, 2650+N, 2850, 3050, 3350, 3640, 3650	AL38235 AL30095
	HF13011	Piston Ø 307mm height 35.9mm		L33483
	HF13008	O-ring		R50703, T22102
	HF13009	O-ring		R50704, T22103
	HF13012	Piston Ø 307mm height 50mm		L33910
	HF13013	O-ring		L39803, L56243
	HF13014	O-ring		L39804, L56244
	HF13017	Brake disc (lined) Ø 306x10.2mm 15 teeth	3030, 3040, 3120, 3130, 3140	AL38235 AL30095
	HF13018	Piston Ø 307mm height 48.4mm		L33909
	HF13008	O-ring		R50703, T22102
	HF13009	O-ring		R50704, T22103
	HF13019	Piston Ø 307mm height 43.7mm		L31017
	HF13013	O-ring		L39803, L56243
	HF13014	O-ring		L39804, L56244

Tractor brake parts

The listed spare parts are not original replacement parts. The original part-numbers (OEM) in this catalogue serve only to comparing purposes.

Order no.	Article description	Tractor model	Cross-Ref.	non original parts
HF13020	Brake disc (lined) Ø 313x4.9mm 14 teeth reinforced toothing	6010, 6100, 6110, 6120, 6200, 6205, 6210, 6220, 6300, 6310, 6320, 6400, 6410, 6420+S, 6505, 6506, 6510, 6520, 6600, 6610, 6620, SE6300+6400	AL111498 AL75434	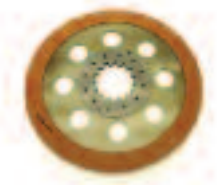
HF13021	Piston		L75648	
HF13022	Brake disc (lined) Ø 313x5.9mm 14 teeth reinforced toothing		AL112982	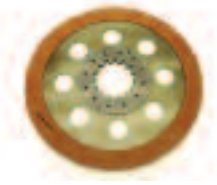
HF13023	Piston		L111978	
HF13024	O-ring		L39942, L56246	
HF13013	O-ring		L56243, L39803	
HF13025	Brake disc (lined) Ø 306x4.9mm	2250, 2450, 2650, 2850, 3040, 3050, 3140, 3150, 3350, 3640	AL65871	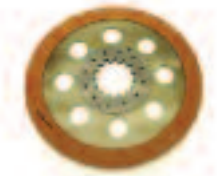
HF13026	Brake disc (lined) Ø 335x7.8mm	6800, 6810, 6900, 6910, 6910S, 7200, 7400	RE186966 RE160072	
HF13027	Piston 18mm		R125128	
HF13028	O-ring		R122850	
HF13029	O-ring		R126399	
HF13030	Brake disc (lined) Ø 370x4.8mm	4520, 4555, 4620, 4630, 4640, 4650, 4755, 4840, 4850, 4955, 7600, 7700, 7800	R135537 R94876	

The listed spare parts are not original replacement parts. The original part-numbers (OEM) in this catalogue serve only to comparing purposes.

John Deere

non original parts	Order no.	Article description	Tractor model	Cross-Ref.
	HF13031	Brake disc (lined) Ø 285x3.3 / 54 teeth	6100,6200,6300,6400 6500,6600,6800,6900 6010,6110,6210,6310 6410,6510,6610,6810 6910,6910S,7200, 7400,7600,7610,7700 7710,7800,7810 840,940,1040,1140, 1350,1640,1750,1840 1850,1950,2040,2150 2240,2250,2350,2450 1030,1130,1630,1830 2030,2650,2850,3040 3050,3140,3350,3640 2140,2940,2950,3055 3150,3255,1640,2040 2130,2250,2450,2650 2840,2850,3030,3040 3050,3130,3140,3350 3640,3650	RE34786
	HF13032	Brake disc (lined) Ø 292x3.3 / 87 teeth		RE34784
	HF13033	Brake disc (lined) Ø 292x5.1 / 87 teeth		RE151059
	HF13034	Brake plate 6mm Ø 221x307mm		L33497
	HF13035	Brake plate 14mm Ø 221x307mm		L55004
	HF13036	Brake plate 21.5mm Ø 223x314mm	6100, 6200, 6300, 6400, 6505, 6600, SE 6300, SE 6400	L114091 L112757 L75651
	HF13037	Brake plate 22mm Ø 223x314mm	6010,6100,6110,6120 6200,6205,6210,6220 6300,6310,6320,6400 6410,6420,6420S, 6505,6506,6510,6520 6600,6610,6620, SE6300+6400+6510	L114053
	HF50009	Brake pad (2 pieces) for cardan shaft	2250, 2450, 2650, 2850, 3050, 3140, 3350, 3640, 3640 S, 3650, 4040 S, 4240 S, 4350	AL66391 AL36485
	HF13038	Brake disc Ø 235mm 24mm 8-holes for cardan shaft		L37620

Tractor brake parts

The listed spare parts are not original replacement parts. The original part-numbers (OEM) in this catalogue serve only to comparing purposes.

Order no.	Article description	Tractor model	Cross-Ref.	non original parts
HF13039	Clutch master	1640, 2040, 2040S, 2140, 3040, 3140	AL34743	
HF13040	Repair kit		AL37517	
HF13041	Clutch master	3640, 3640S	AL40974	
HF13050	Clutch master	up to ch. no. 620387	AL57619	
HF13042	Clutch master	from ch.no. 620388 on	AL66918	
HF13043	Repair kit	2250, 2450, 2650, 2850, 3050, 3350, 3650	AL67034	
HF13044	Clutch slave	1640, 2040, 2040S, 2140, 3040, 3140	AL34744	
HF13045	Repair kit		AL37520	
HF30009	Brake lining 30x4x188 7-holes	D1106, 1205, 1215, 1266, 1305, 1306, 1315, 1666, 1806 A1205, 1215, 1305, 1806	drum size 180x30	
HF30022	Brake lining long 50x6x327 16-holes	D1606, 1616, 1706, 1906, 2006, 2016, 2206, 2216, 2416, 2816	drum size 300x50	
HF30020	Brake lining short 50x6x248 12-holes			

The listed spare parts are not original replacement parts. The original part-numbers (OEM) in this catalogue serve only to comparing purposes.

Kramer

non original parts	Order no.	Article description	Tractor model	Cross-Ref.
	HF30066	Brake lining 30x5x160 6-holes	KL12, KA15, KA110	drum size 160x30
	HF30104	Brake lining 30x5x160 10-holes		
	HF30002	Brake lining 20x4x203 8-holes		drum size 180x20
	HF40001	Rivets 3x8		
	HF30009	Brake lining 30x4x188 7-holes	KL11, K-KB-KL12, K-KA15, KL-KB22, KB25, K33, KL110, KL-KB150, KL200 KL-KB220, KA-KB250, KA330	drum size 180x30
	HF40001	Rivets 3x8		
	HF30006	Brake lining 40x4.5x190 7-holes		drum size 180x40
	HF40001	Rivets 3x8		
	HF30008	Brake lining 40x5x270 10-holes	KL550, UF900 All-wheel Drive	drum size 250x40
	HF40004	Rivets 4x10		
	HF30020	Brake lining short 50x6x234 12-holes	KB17, KL17, KB180, KL180, UF900 All-wheel Drive	drum size 300x50
	HF30022	Brake lining long 40x6x327 16-holes		
	HF40004	Rivets 4x10		

Tractor brake parts

The listed spare parts are not original replacement parts. The original part-numbers (OEM) in this catalogue serve only to comparing purposes.

Order no.	Article description	Tractor model	Cross-Ref.	non original parts
HF30044	Brake lining 60x6x380 16-holes	KB22-C, KB25, KB25-L, KA250, KB250, KA330	drum size 350x60	
HF40005	Rivets 4x12			
HF30125	Brake lining 40x5x160 10-holes	K400 (hand brake)	drum size 160x40	
HF40006	Rivets 5x10			
HF30031	Brake lining short 60x8x324 12-holes	K45, 350 Export KL400	drum size 400x80	
HF30030	Brake lining long 60x8x436 16-holes			
HF40007	Rivets 5x12			

The listed spare parts are not original replacement parts. The original part-numbers (OEM) in this catalogue serve only to comparing purposes. .

Lamborghini

non original parts	Order no.	Article description	Tractor model	Cross-Ref.
	HF35008	Disc lining set Ø 102mm with rivets	R235, 235DT, 235S	
	HF14001	Brake disc (lined) Ø 102mm 23 teeth		15154503
	HF14002	Actuating unit Ø 102mm		15954323
	HF35004	Disc lining set Ø 178mm with rivets	R483, 483DT (from No.1149 on) R503+DT, R603+DT(from 82 on) R583+DT, R653+DT+Frutteto, R654+DT, R683+DT R684+DT+Frutteto R724+DT	13654350
	HF14003	Brake disc (lined) Ø 178mm 13 teeth		15854343
	HF14004	Actuating unit Ø 178mm		13654323

Tractor brake parts

The listed spare parts are not original replacement parts. The original part-numbers (OEM) in this catalogue serve only to comparing purposes.

Order no.	Article description	Tractor model	Cross-Ref.	non original parts
HF14005	Brake disc (lined) Ø 178mm 23 teeth oilbath+mechanical	R483, R550, R583, R653, R654 683, R684, R724 (and DT) R653+684 Frutteto 660+F+DT+V, 775+F	25654340/10 25654340	
HF14006	Metal disc Ø 184mm		25654560 17754750	
HF14007	Brake disc (lined) Ø 224mm 27 teeth oilbath+hydraulical or mechanical rear wheel	R360, R365, R470, R475 (and DT)	15454590	
HF14008	Metal disc Ø 228mm		15454600	
HF14009	Actuating unit Ø 224mm		15454610	
HF14010	Brake disc (lined) Ø 224mm 27 teeth oilbath front wheel	R674, R774, R956, R956-100,R1106+DT, R1306 Tur.DT, R1356DT, R1506 Tur.DT, R1556DT, R1706 Tur.DT, Formula 115+135 Grand Prix 674-90, 774-80,Grand Prix 874-90T, Premium 850+950+1050 Premium 1060 Racing 150+165+190	22454340	
HF14011	Metal disc Ø 228mm		27543510	

The listed spare parts are not original replacement parts. The original part-numbers (OEM) in this catalogue serve only to comparing purposes. .

Lamborghini

non original parts	Order no.	Article description	Tractor model	Cross-Ref.
	HF14012	Brake disc (lined) Ø 260mm 12 teeth oilbath	R754+784+854+955 +DT	17154342
	HF14013	Brake disc (lined) Ø 282mm 13 teeth oilbath+mechanical rear wheel	R573-60N, R574- 60N, R674+674-5+674- 70N R674-70 Grand Prix	25554472/10
	HF14014	Brake disc (lined) Ø 282mm 12 teeth oilbath+mechanical rear wheel	R774+DT, 774- 5+774-80+N Grand Prix 674-70, 774-80, GrandPrix 874-90T Premium 850,950,1050+60	44554472/10 00970672
	HF14015	Brake disc (lined) Ø 304mm 12 teeth oilbath+mechanical rear wheel	R956, R956-100, R1106, R1056, R1306 Turbo DT, R1356DT, R1506 Tur.DT, A1556DT	17054340
	HF14016	Brake disc (lined) Ø 342mm 12 teeth oilbath	R1156+1256	17154342
	HF14017	Metal disc (lined) Ø 150mm 19 teeth hand brake	R573+574+674+774+ 874, R674-70 Grand Prix 774-80, 874-90T, Premium 850+950,R583+653+ 654+683+684+724+ 754,784+854+955+ 956+1106+1056+1256, 1156+1306+1356+ 1506+1556, Formula 115+135 Plus 660+775+880+ 990F, 1050+1060	25554520
	HF14018	Brake pad lining one side		17154512
	HF14019	Brake pad lining both sides		17154592

Tractor brake parts

The listed spare parts are not original replacement parts. The original part-numbers (OEM) in this catalogue serve only to comparing purposes.

Order no.	Article description	Tractor model	Cross-Ref.	non original parts
HF35003	Disc lining set 4 pieces with rivets 165mm	5500, 6500, 6550, 7500, 7550, 8500, 8550, 9500	1423617M91 3305272M91	
HF15005	Brake disc (lined) 165mm, 13 teeth		1823112M92	
HF15006	Actuating unit		1822606M92 3475942M 3300320	
HF35004	Disc lining set 4 pieces with rivets 178mm	5500, 6500, 6550, 7500, 7550, 8500, 8550, 9500	840916M91	
HF15007	Brake disc (lined) 178mm, 13 teeth		1895852M91 3106373M91 1753117	
HF15010	Actuating unit		764805M92 3302698 982047	
HF23001	Brake disc (lined) Ø 178mm oilbath	5530, 6530, 5830, 6830, 7830, 8830, 5530 ... 9880	3308295L1	
HF23002	Intermediate disc		3308296L1	
HF23003	Actuating unit		3304634L1	

The listed spare parts are not original replacement parts. The original part-numbers (OEM) in this catalogue serve only to comparing purposes. .

Landini

non original parts	Order no.	Article description	Tractor model	Cross-Ref.
	HF15013	Brake disc (lined) Ø 222mm oilbath	10000, 12500, 13000, 14500	1860964M1
	HF15014	Intermediate disc		1860965M1
	HF15015	Actuating unit		1860963M91
	HF23005	Brake pad		3302353L1
	HF23006	Brake pad		3302354L1
	HF23004	Metal disc Ø 142mm hand brake	5530, 6530, 5830, 6830, 7830, 8830	3302355L1
	HF15055	Brake master cylinder Ø 17.8mm	8550, 12500, 14500	1874957M91
	HF15056	Repair kit		1810596M91
	HF15057	Brake master cylinder	Serie 80	3305623M92
	HF15091	Wheel brake cylinder	6550, 7550, 8550, 10000, 12500, 13000, 14500	785625M92

Tractor brake parts

The listed spare parts are not original replacement parts. The original part-numbers (OEM) in this catalogue serve only to comparing purposes.

Order no.	Article description	Tractor model	Cross-Ref.	non original parts
HF30009	Brake lining 30x4x188 7-holes	D45, D238/45, D245, D254, D540, D548	drum size 180x30	
HF40001	Rivets 3x8			
HF30006	Brake lining 40x4.5x190 7-holes		drum size 180x40	
HF40001	Rivets 3x8			
HF30027	Brake lining 50x4.5x170 8-holes		drum size 180x50	
HF40003	Rivets 4x8			
HF30019	Brake lining 50x4.7x190 8-holes		drum size 180x50	
HF40003	Rivets 4x8			
HF30033	Brake lining (brake band) 70x5x210 10-holes	D12, D14, D15, D16, D18, D20, D24, D112, D117, D215, D415, D420, S18, Varimot 08+11	drum size 180x70	
HF07011	Band complete			
HF40006	Rivets 5x10			
HF30026	Brake lining 50x5x190 10-holes		drum size 200x50	
HF40004	Rivets 4x10			
HF30008	Brake lining 40x5x270 10-holes	D45, D238/45, D245, D254, D540, D548	drum size 250x40	
HF40004	Rivets 4x10			

The listed spare parts are not original replacement parts. The original part-numbers (OEM) in this catalogue serve only to comparing purposes.

Lanz

non original parts	Order no.	Article description	Tractor model	Cross-Ref.
	HF30020	Brake lining short 50x6x234 12-holes	D12, D14, D15, D16, D18, D20, D24, D112, D117, D215, D415, D420, S18, Varimot 08+11	drum size 300x50
	HF30022	Brake lining long 50x6x327 16-holes		
	HF40004	Rivets 4x10		
	HF30044	Brake lining long 60x6x370 16-holes	Varimot NI, D28, D30, D32, D36, D45, D47, D138, D225, D230, D434, D538, D436, D538	drum size 350x60
	HF30035	Brake lining short 60x6x287 12-holes		
	HF40005	Rivets 4x12		
	HF30031	Brake lining short 60x8x324 12-holes	D40	drum size 400x60
	HF30030	Brake lining long 60x8x436 16-holes		
	HF40007	Rivets 5x12		

Lindner

non original parts	Order no.	Article description	Tractor model	Cross-Ref.
	HF24001	Brake pad (2 pcs) 62x56x15		3202813

The listed spare parts are not original replacement parts. The original part-numbers (OEM) in this catalogue serve only to comparing purposes.

Order no.	Article description	Tractor model	Cross-Ref.	non original parts
HF30002	Brake lining 20x4x203 8-holes	B18A, 2F1, 2K1, 2L1, 2L2, 2L3, 4L1, 4L1A, 4L2, 2K2, 2K3	drum size 180x20	
HF40001	Rivets 3x8			
HF30009	Brake lining 30x4x188 7-holes	AS178A, B18A, B18A/O, 2F1, 2K-1-2-3, 2L1-2-3, 4K1, 4K1A, 4L1, 4L1A, 4L2A, Hand brake: AS325, AS330	drum size 180x30	
HF40001	Rivets 3x8			
HF30006	Brake lining 40x4.5x190 7-holes	2N1 All-wheel Drive, 4N2	drum size 180x40	
HF40001	Rivets 3x8			
HF30019	Brake lining 50x4.7x190 8-holes		drum size 180x50	
HF40003	Rivets 4x8			
HF30027	Brake lining 50x4.5x172 8-holes	4P1	drum size 180x50	
HF30026	Brake lining 50x5x192 10-holes		drum size 200x50	
HF40004	Rivets 4x10			
HF30008	Brake lining 40x5x270 10-holes	D40A-H, 2R2, 2R3, 4R1, 4R2A, 4R3 All-wheel Drive	drum size 250x40	
HF40004	Rivets 4x10			

The listed spare parts are not original replacement parts. The original part-numbers (OEM) in this catalogue serve only to comparing purposes.

MAN

non original parts	Order no.	Article description	Tractor model	Cross-Ref.
	HF30020	Brake lining short 50x6x234 12-holes	Hand brake: 2S2, 4S1, 4S2 Foot brake: A25A, 4N1, 4N1A	drum size 300x50
	HF30022	Brake lining long 50x6x327 16-holes		
	HF40004	Rivets 4x10		
	HF30044	Brake lining 60x6x380 16-holes	AS325A-EH-H, AS330A-H	drum size 350x60
	HF40005	Rivets 4x12		
	HF30030	Brake lining short 60x8x324 12-holes	A32A-H, B32A-H, C40A-H, D40A, AS430A-H, AS440A-H, AS542A, A45A, B45A, B45H/O, 2S2, 4S1-2, 4S2A	drum size 400x60
	HF30031	Brake lining long 60x8x436 16-holes		
	HF40007	Rivets 5x12		
	HF30045	Brake lining long 80x8x436 16-holes	4T1A	drum size 400x80
	HF40008	Rivets 5x15		
	HF08011	Brake band width 25mm left	4P1	
	HF08012	Brake band width 25mm right		

Tractor brake parts

The listed spare parts are not original replacement parts. The original part-numbers (OEM) in this catalogue serve only to comparing purposes.

Order no.	Article description	Tractor model	Cross-Ref.	non original parts
HF15016	Brake disc (lined) hand brake	Series 2600, 2700, 3600, 8110, 8120, 8130, 8140, 8150, 8160	3715250M2	
HF15017	Intermediate disc		3380442M1	
HF15018	Actuating unit 143 mm		3617341M2	
HF15019	Brake disc (lined) hand brake	3050, 3060, 3065, 3070, 3080, 3085, 3090, 3095, 3115, 3120, 3125, 3140, 6110, 6120, 6130, 6140, 6150, 6160, 6170, 6180, 6190	3385987M1	
HF15020	Actuating unit		3382325M1	

The listed spare parts are not original replacement parts. The original part-numbers (OEM) in this catalogue serve only to comparing purposes.

Massey Ferguson

non original parts	Order no.	Article description	Tractor model	Cross-Ref.
	HF15021	Brake disc (lined) hand brake	Series 3000, 3100, 6100 from E327007 on 6235, 6245, 6255, 6260, 6265, 6270, 6280, 6290	3790493M1
	HF15022	Intermediate disc	up to L037020	3716932M1
	HF15023	Intermediate disc	from L037021 on	3795094M1
	HF15024	Actuating unit		3716920M91
	HF15025	Brake disc thickness 3.6mm	Serie 8200, 8170, 8180	3716933M1
	HF15026	Brake disc thickness 4.3mm		3795093M1
	HF15027	Intermediate disc thickness 6mm		3716932M1
	HF15028	Intermediate disc thickness 5mm		3795094M1
	HF15029	Actuating unit		3716920M91

Tractor brake parts

The listed spare parts are not original replacement parts. The original part-numbers (OEM) in this catalogue serve only to comparing purposes.

Order no.	Article description	Tractor model	Cross-Ref.	non original parts
HF15001	Brake pad (4 pieces) hand brake with brake on transmission!	154+F/S, 174+F/S, 184F/S, 194F/S, 253, 254, 254S, 273, 274, 274S/K, 283, 284S, 293, 294S		
HF15002	Brake disc 142mm		3302355M1	
HF15003	Brake pad (5 pieces)	1014, 1024, 1114, 1134	2x 3302354M1 3x 3302353M1	
HF15004	Brake disc 152mm		3302840M1	
HF35003	Disc lining set 4 pieces with rivets 165mm	154, 174, 184, 194, 254+S, 274, 284S, 294S, 560, 565, 660, 665	1423617M91 3305272M91	
HF15005	Brake disc (lined) 165mm, 13 teeth		1823112M92	
HF15006	Actuating unit		1822606M92 3475942M	

The listed spare parts are not original replacement parts. The original part-numbers (OEM) in this catalogue serve only to comparing purposes.

Massey Ferguson

non original parts	Order no.	Article description	Tractor model	Cross-Ref.
	HF35004	Disc lining set 4 pieces with rivets 178mm	154, 165, 174, 175, 178, 184, 194, 254, 274, 284, 294, 560, 565, 660, 665, 765	840916M91
	HF15007	Brake disc (lined) 178mm, 13 teeth	154, 174, 184, 194, 254, 274, 284, 294, 560, 565, 660, 665	1895852M91 3106373M91
	HF15008	Brake disc (lined) 178mm, 27 teeth	165, 175, 178, 765	1810335M91 1810350M91
	HF15009	Actuating unit	154, 165, 174, 175, 178, 184, 194, 254, 274, 284, 294, 560, 565, 660, 665, 765	1895334M91 764805M92
	HF15030	Brake disc (lined) 178mm, 23 teeth thickness 5mm	154-174-194-254-274-294-353-354-363-364-373-374-383-384-393-394	3550896M1 3308295M2
	HF15031	Actuating unit		3308792M91

Tractor brake parts

The listed spare parts are not original replacement parts. The original part-numbers (OEM) in this catalogue serve only to comparing purposes.

Order no.	Article description	Tractor model	Cross-Ref.	non original parts
HF35010	Disc lining set 4 pieces with rivets 222mm	135, 165, 175, 178, 180, 188 595, 1080, 1200 with cast iron axle	1630944M91	
HF15011	Brake disc (lined) 222mm, 27 teeth		1805980M1 1044526M2 3609064M1	
HF15012	Actuating unit		1806264M92	
HF15013	Brake disc (lined) Ø 225mm oilbath	133, 135, 145, 152, 158, 165, 168, 185, 188, 240, 250, 255, 260, 265, 275, 285, 290, 298, 560, 565, 575, 590, 592, 595, 675 - 690 - 698- up to MY 1984 698, 699, 1004, 1085, 1200,1250	1860964M1+M2	
HF15014	Intermediate disc		1860965M1+M2	
HF15015	Actuating unit		1860963M91+M92	

The listed spare parts are not original replacement parts. The original part-numbers (OEM) in this catalogue serve only to comparing purposes.

Massey Ferguson

non original parts	Order no.	Article description	Tractor model	Cross-Ref.
	HF15032	Brake disc (lined) 355mm 13 teeth	3070, 3080, 3085, 3090, 3095 up to B 082008	3386896M92
	HF15033	Sealing set 2 pieces for piston large		3617902M3
	HF15034	Sealing set 2 pieces for piston small		3617901M2
	HF15035	Brake disc (lined) 355mm 14 teeth	2620,2625,2640,2645 2680,2685,2720,2725 3115,3120+T,3125, 3140,3610,3630,3635 3645,3650,3655,3660 3680 up to B126020	3386897M92
	HF15036	Sealing set, 2 pcs for piston large	up to S283003	1610179M5
	HF15037	Sealing set, 2 pcs for piston small		1610178M5
	HF15033	Sealing set, 2 pcs for piston large	from S283004 on	3617902M3
	HF15034	Sealing set, 2 pcs for piston small		3617901M2
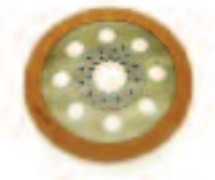	HF15038	Brake disc (lined) 340mm 13 teeth	from B082009 on 3070, 3080, 3085, 3090, 3095 3075 6150, 6160, 6170, 6245, 6255, 6260, 6265, 6270	3617652M91
	HF15033	Sealing set, 2 pcs for piston large		3617902M3
	HF15034	Sealing set, 2 pcs for piston small		3617901M2

Tractor brake parts

The listed spare parts are not original replacement parts. The original part-numbers (OEM) in this catalogue serve only to comparing purposes.

Order no.	Article description	Tractor model	Cross-Ref.	non original parts
HF15039	Brake disc (lined) 343mm 14 teeth	from B126021 on 3115, 3120+T, 3125, 3140 from B125035 on drive wheel closing up to inside 3635, 3645 from B126026 on drive wheel closing up to outside 3635, 3645, 3655 from B116026 on sealed casing 3635, 3645, 3655, 3670, up to L023001 6280, 6290, 6180	3617653M91	
HF15033	Sealing set, 2 pcs for piston large		3617902M3	
HF15034	Sealing set, 2 pcs for piston small		3617901M2	
HF15040	Brake disc (lined)	up to B126033 3050, 3060, 3065	3582085M92	
HF15033	Sealing set, 2 pcs for piston large		3617902M3	
HF15034	Sealing set, 2 pcs for piston small		3617901M2	
HF15041	Brake disc (lined)	from B126034 on 3050, 3060, 3065 6110, 6120, 6130, 6140, 6235	3617651M91	
HF15033	Sealing set, 2 pcs for piston large		3617902M3	
HF15034	Sealing set, 2 pcs for piston small		3617901M2	
HF15042	Brake disc (lined)	up to A294002 3670, 3690 with assembled reducing valve	3616538M92	
HF15033	Sealing set, 2 pcs for piston large		3617902M3	
HF15034	Sealing set, 2 pcs for piston small		3617901M2	
HF15043	Brake disc (lined)	from A294003 on 3670, 3690 8150, 8160 with assembled reducing valve	3617649M91	
HF15033	Sealing set, 2 pcs for piston large		3617902M3	
HF15034	Sealing set, 2 pcs for piston small		3617901M2	

The listed spare parts are not original replacement parts. The original part-numbers (OEM) in this catalogue serve only to comparing purposes.

Massey Ferguson

non original parts	Order no.	Article description	Tractor model	Cross-Ref.
	HF15043	Brake disc (lined)	8210, 8220 drive wheel closing up to outside 8220, 8240, 8250 with sealed casing 8240, 8250, 8260 with as-sembled reducing valve	3617649M91
	HF15044	Sealing set, 2 pcs for piston large		3716252M2
	HF15045	Sealing set, 2 pcs for piston small		3716335M1
	HF15046	Brake disc (lined)	from L023002 on, 6280, 6290	3795499M1
	HF15033	Sealing set, 2 pcs for piston large		3617902M3
	HF15034	Sealing set, 2 pcs for piston small		3617901M2
	HF15047	Brake disc (lined)	8160, 8170, 8180, 8260, 8270, 8280 with double reducing valve	3716223M1
	HF15044	Sealing set, 2 pcs for piston large		3716252M2
	HF15048	Sealing set, 2 pcs for piston small		3716253M1
	HF30056	Brake lining set 340x50, 12-holes foot brake 4 pcs + rivets	TEA+TED+TEF20, 50, 60 FE35, 35, 35X, 133, 135, 148, 230, 240, 550, 65, 158, 165, 168, 175, 178,	1851062M91
	HF30078	Brake lining set 340x38, 12-holes hand brake 4 pcs + rivets		3106018M91
	HF15049	Brake shoe (complete) 340x50		1810517M1
	HF15050	Brake shoe (complete) 340x38		
	HF15051	Adjustment bolt		1850213M91
	HF15052	Brake drum 340x50 foot brake		827707M5

Tractor brake parts

The listed spare parts are not original replacement parts. The original part-numbers (OEM) in this catalogue serve only to comparing purposes.

Order no.	Article description	Tractor model	Cross-Ref.	non original parts
HF15053	Brake pad conical (only reconditioning)	MF 25	966251M1 (only brake lining)	
HF15054	Brake pad (4 pieces) width 86mm height 36mm	130	1804077M91 3910279M91	
HF15055	Brake master cylinder	235, 245, 250, 255, 260, 265, 275, 290, 298, 560	1698670M91	
HF15056	Repair kit		1810596M91	
HF15057	Brake master cylinder	274SK, 284S, 294S, 377, 387, 397, 397T, 1007, 1014, 1024, 1114,1134	3305623M92	
HF15058	Repair kit		1810749M91	
HF15059	Brake master cylinder	134, 154, 164, 174, 184, 194, 334, 354, 364, 374, 384, 394	3303732M92	
HF15060	Repair kit		1810849M91	
HF15061	Brake master cylinder	254S, 264T, 274S	3301382M93	
HF15060	Repair kit		1810849M91	
HF15062	Brake master cylinder	350, 355, 360, 365, 375, 390, 398, 399	3595504M2	
HF15060	Repair kit		1810849M91	

The listed spare parts are not original replacement parts. The original part-numbers (OEM) in this catalogue serve only to comparing purposes.

Massey Ferguson

non original parts	Order no.	Article description	Tractor model	Cross-Ref.
	HF15063	Brake master cylinder	274SK,294S,398,575 590,592,595,675,690 1014,1024,1114,1134 harvester 530S, 560,565,660,665,810, 815,820,825,830,835	1874957M91
	HF15056	Repair kit		1810596M91
	HF15064	Brake master cylinder	Series 3000, 3100, 3600, 6100, 6200, Types 8110, 8120, 8130, 8140, 8150, 8160, mechan. brake (single circuit) Series 3600 6260, 6270, 6280, 6290 up to 01/02 Series 8100, 8200 from 01/02 on with brake booster without trailer brake	3384685M3
	HF15065	Repair kit		1810832M91
	HF15066	Brake master cylinder	Series 3000, 3100, 3600, 6100, 6200, Types 8110, 8120, 8130, 8140, 8150, 8160, mechan. brake (dual circuit) Series 3600 6260, 6270, 6280, 6290 up to 01/02 Series 8100, 8200 from 01/02 on with brake booster with trailer brake	3383079M5
	HF15067	Repair kit		1810833M91
	HF15068	Brake master cylinder	Series 4200, 4300	3810587M95
	HF15069	Repair kit		3901567M91
	HF15070	Brake master cylinder	377, 387, 397, 1007	3536279M92
	HF15060	Repair kit		

The listed spare parts are not original replacement parts. The original part-numbers (OEM) in this catalogue serve only to comparing purposes.

Order no.	Article description	Tractor model	Cross-Ref.	non original parts
HF15071	Brake master cylinder	3315, 3325, 3330, 3340, 3350, 3355	0.009.9234.4	
HF15072	Repair kit		0.009.4674.0	
HF15073	Brake master cylinder	350, 355, 360, 365, 375, 390, 398, 399 with tangential brake 340, 342, 352, 362, 365, 375, 390, 398, 399 up to ch.no. S08141	3596785M92	
HF15074	Repair kit		1810936M91	
HF15075	Brake master cylinder	340, 342, 352, 362, 365, 375, 390, 398, 399 from chassis no. S08142, 362N, 372N, 382N, 396	3614780M91	
HF15076	Repair kit		1811086M91	
HF15077	Brake master cylinder	675, 690, 698, 699, 1004	1682767M91	
HF15078	Repair kit		1810714M91	
HF15079	Brake master cylinder	2620, 2625, 2640, 264S, 2680, 2685, 2720, 2725	1613986M4	
HF15080	Repair kit		1642034M91	
HF15081	Brake master cylinder		1883083M91	
HF15082	Clutch slave	Series 3000, 3100, 3600, 6100, 6200, Types 8110, 8120, 8130, 8140, 8150, 8160	3617596M1	

The listed spare parts are not original replacement parts. The original part-numbers (OEM) in this catalogue serve only to comparing purposes.

Massey Ferguson

non original parts	Order no.	Article description	Tractor model	Cross-Ref.
	HF15083	Wheel brake cylinder	235, 245, 250, 255, 260, 290 up to 01/80 560 up to chassis A310 575, 590 up to ch. J121 592, 595 up to chassis A2770031	3186482M91 1697360M91
	HF15084	Repair kit		835939M91
	HF15085	Wheel brake cylinder	235, 245, 250, 255, 260, 290 from 01/80 on 560 from chassis A310 on 675, 690, 698, 699, 1004	1676387M92
	HF15086	Repair kit		
	HF15087	Wheel brake cylinder left	340, 342, 350, 352, 355, 360, 362+N, 365, 372N, 375, 382N, 390+T, 396, 398, 399	3477380M92
	HF15088	Wheel brake cylinder right		3477381M92
	HF15089	Wheel brake cylinder	154F,154S,134+154V 164TV,174/184/194+364/374/384F+S+V, 254S, 264TS,294S 274S+SK,334V, 354F+S, 377, 387, 394, 397+T, 1007	3302605M91
	HF15090	Repair kit		3302114M91
	HF15091	Wheel brake cylinder	284, 294, 1014, 1024, 1114, 1134, 520, 525, 530, 535, 560, 565, 620, 625, 660, 665, 800, 805, 810, 815, 820, 825, 830, 835, 840, 845	785625M92
	HF15092	Repair kit		1810573M91
	HF15093	Wheel brake cylinder	354, 364, 374, 384, 394, 3210, 3220, 3225, 3235	3537812M91
	HF15094	Repair kit		3540225M91
	HF15095	Wheel brake cylinder	377, 387, 397, 1007 front with brake	3536401M91
	HF15096	Repair kit		3311651M91

Tractor brake parts

The listed spare parts are not original replacement parts. The original part-numbers (OEM) in this catalogue serve only to comparing purposes.

Order no.	Article description	Tractor model	Cross-Ref.	non original parts
HF15097	Repair kit Wheel brake cylinder	MF35		
HF15102	Repair kit Brake master cylinder			
HF15098	Wheel brake cylinder left	Series 4200, 4300	3901455M91	
HF15099	Wheel brake cylinder right		3901456M91	
HF15060	Repair kit		1810917M94	
HF30068	Brake lining set 35x5x229, 8-holes hand brake incl. rivets 4x10 drum 200x35	MF122, MF130	3106019M1 1802659M1 1804938M1	

The listed spare parts are not original replacement parts. The original part-numbers (OEM) in this catalogue serve only to comparing purposes.

Mercedes Benz

non original parts	Order no.	Article description	Tractor model	Cross-Ref.
	HF22001	Brake lining 350x70 10-holes	U34, U40, U45, U52, U55, U60 version 421	4214210510
	HF22002	Brake lining double tires 367x70 10-holes	U52 double tires version 421	4214210410
	HF22003	Brake lining 390x70 10-holes	U54, U66, U70, U80, U82, U84, U90, U100, U110, U125, U1000 MB Trac 65/70	4064210110
	HF22004	Brake pad 89.75x73.8x15	MB Trac 700, 800, 900, 1000, 1100, 1300, 1400, 1500, 1600, 1800 U70, U80, U90, U100, U110	A0034207420 0015866342 0004206320 0015868242
	HF22005	Brake pad (8 pieces) 150x81x20.3 front axle	U90, U110, U120, U140, U600, U650, U1100, U1250, U1300, U1500, U1600, U1650, U1700, U1750, U2100, U2400, U2450	0024201320
	HF22006	Brake pad (4 pieces) 150x81x20.3 rear axle		0014209120 0024201420

Tractor brake parts

The listed spare parts are not original replacement parts. The original part-numbers (OEM) in this catalogue serve only to comparing purposes.

Order no.	Article description	Tractor model	Cross-Ref.	non original parts
HF22007	Brake disc solid Ø 374mm 10 holes thickness 22mm bolt circle-Ø 108mm hub Ø 60.25mm	Unimog	4174210012 4374210012	
HF22008	Brake disc solid Ø 374mm 10 holes thickness 22mm bolt circle-Ø 108mm hub Ø 80.25mm	Unimog	4164210412 4354210412	
HF22009	Brake disc solid Ø 380mm 8 holes thickness 30mm min. thickness 26mm bolt circle-Ø 180mm	Unimog	4254210012	
HF22010	Brake disc solid Ø 386.5mm 8 holes thickness 22mm min. thick. 20.5mm bolt circle-Ø 180mm	Unimog	4274210012	
HF22011	Brake disc solid Ø 421mm 8 holes thickness 22mm min. thick. 20.5mm bolt circle-Ø 180mm	MB-Trac	4404210012 4404210112	

The listed spare parts are not original replacement parts. The original part-numbers (OEM) in this catalogue serve only to comparing purposes.

Multicar

non original parts	Order no.	Article description	Tractor model	Cross-Ref.
	HF27001	Brake pad set 4 pcs with spring	M26	
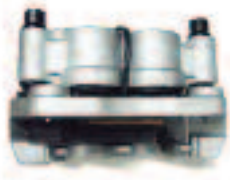	KF01002	Brake caliper right incl. brake pads		
	KF01003	Brake caliper left incl. brake pads		
	KF01008	Repair kit with pistons		

Tractor brake parts

The listed spare parts are not original replacement parts. The original part-numbers (OEM) in this catalogue serve only to comparing purposes.

Order no.	Article description	Tractor model	Cross-Ref.	non original parts
HF30002	Brake lining 20x4x203 8-holes		drum size 180 x 20	
HF40001	Rivets 3x8			
HF30009	Brake lining 30x4x188 7-holes	Junior H108, K108, L108, S108, V108, F109	drum size 180 x 30	
HF40001	Rivets 3x8			
HF30006	Brake lining 40x4.5x189 7-holes	Junior H108, K108, L108, S108, V108, F109, 217	drum size 180 x 40	
HF40001	Rivets 3x8			
HF30008	Brake lining 40x5x272 10-holes	Super L318, 319 Master 418, 419	drum size 250 x 40	
HF40004	Rivets 4x10			
HF30023	Brake lining long 50x6x327 16-holes	Standard-Star 219 Standard-Super339	drum size 300 x 50	
HF30025	Brake lining short 50x6x243 12-holes	Hand brake AP144 Master N408, V408		
HF40006	Rivets 5x10			
HF30044	Brake lining long 60x6x370 16-holes	AP17, AP18, AP22, 218, AP122, A133, 308, F208, P122, 133, Standard Star 238, Standard F208, T217, V, H, T, Super B, L, N, Export L329	drum size 350 x 60	
HF30035	Brake lining short 60x6x287 12-holes			
HF40004	Rivets 4x10			
HF30030	Brake lining long 60x8x435 16-holes	AP144, A144, Master N408, V408	drum size 400 x 60	
HF30031	Brake lining short 60x8x324 12-holes			
HF40007	Rivets 5x12			

The listed spare parts are not original replacement parts. The original part-numbers (OEM) in this catalogue serve only to comparing purposes.

Renault

non original parts	Order no.	Article description	Tractor model	Cross-Ref.
	HF35008	Disc lining set 102x51x4.8 4 pieces + rivets	551, 651	
	HF16001	Brake disc (lined) Ø 102mm 28 teeth		7700013504 7701004426 6005003083
	HF16002	Actuating unit Ø 102mm		
	HF35006	Disc lining set 152x79x4.7 4 pieces + rivets	351, 421, 461, 462, 521, 556, 656, 751, 782, 851, 951, 1151, 60-70-80-90S, 460S, 480S, 490S, 32-50, 32-60, 34-60, 42-70, 44-70	6005000415 6005003082 7701200201
	HF16003	Brake disc (lined) Ø 152mm 37 teeth		6005003079 7700013499 7701029783
	HF16004	Brake disc (lined) Ø 152mm (Cararro) 23 teeth		
	HF16005	Actuating unit Ø 152mm		7701004423 7700012447 7700012446

Tractor brake parts

The listed spare parts are not original replacement parts. The original part-numbers (OEM) in this catalogue serve only to comparing purposes.

Order no.	Article description	Tractor model	Cross-Ref.	non original parts
HF35003	Disc lining set 165x89x4.7 4 pieces + rivets	551, 651, 652, 681, 751, 58-12, 58-14, 61-12, 61-14, 65-12, 65-14, 68-12, 68-14, 70-12, 70-14, 75-12, 75-14, 80-12, 80-14, 85-12, 85-14	6005003081 6005000414 6005000458	
HF16006	Brake disc (lined) Ø 165mm 37 teeth		6005003078 7700013496 7701029784	
HF16007	Actuating unit Ø 165mm		7701025453 7700012445	
HF35004	Disc lining set 178x101x4.8 4 pieces + rivets	751, 752, 782, 851, 951, 1151	7701200403 6005003080 6005000413	
HF16008	Brake disc (lined) Ø 178mm 20 teeth		7701017978	
HF16009	Brake disc (lined) Ø 178mm 47 teeth		6005003077	
HF16010	Actuating unit Ø 178mm		7701017977 7700012444	

The listed spare parts are not original replacement parts. The original part-numbers (OEM) in this catalogue serve only to comparing purposes.

Renault

non original parts	Order no.	Article description	Tractor model	Cross-Ref.
	HF16011	Brake disc (lined) oilbath Ø 165mm 37 teeth	58-32,58-34, 65-32, 65-34, 70-32,70-34, Ceres 65, 70,75, 310, 320	7700016494
	HF16012	Brake disc (lined) oilbath Ø 203mm 37 teeth	75-32,75-34, 80-32, 80-34, 85-32,85-34, 90-32, 90-34 Ceres 85, 95, 330, 340 Ergos 85, 95, 105 Cergos 330, 340, 350	7700014997
	HF16013	Brake disc (lined) oilbath Ø 222mm 46 teeth	95-12/14, 103-12/14/52/54 106-14/54, 110-14/54 120-14/54, 133-14/54 145-14/54, 155-54 Temis550/610,/630/ 650	7700015006
	HF16014	Brake disc (lined) oilbath Ø 343mm 14 teeth	Ares 630, 640, 710, 720	6005019455
	HF45048 HF45049	Brake band left Ø 200mm length 535mm, width 35mm Brake band right	68-12/14, 75-12/14 95-12 up to 50693 95-14 up to 52334 103-12 up to 50404 103-14 up to 52646	7701025832+51 6005003693+94 6005008446+47 6005009130+31 L + R
	HF45050 HF45051	Brake band left Ø 245mm length 735mm, width 35mm Brake band right	95-12 from 50694 on, 95-14 from 52335 on, 103-12 from 50405 on, 103-14 from 52647 on, 106-14, 110-14, 113-12/14, 133-14, 145-14, 120-14	7701027002+08 6005003695+96 6005008448+49 6005009132+33 L + R
	HF16019	Disc brake pad set up to 30 Km/h	61-12/14, 68-12/14, 75-12/14, 80-12/14, 95-12/14, 103-12/14, 106-14, 110-14, 113-12/14, 120-14, 133-14, 145-14	6005005031 7701202160 7701201653

Tractor brake parts

The listed spare parts are not original replacement parts. The original part-numbers (OEM) in this catalogue serve only to comparing purposes.

Order no.	Article description	Tractor model	Cross-Ref.	non original parts
HF16020	Brake pad set up to 40 Km/h	61-12/14, 68-12/14, 75-12/14, 80-12/14, 95-12/14, 103-12/14, 106-14, 110-14, 113-12/14, 120-14, 133-14, 145-14	6005003571 6005000971 7701202440	
HF50009	Brake pad front	103-52, 103-54, 106-54	6005003571 6005000971 7701202440	
HF16022	Brake master cylinder	Master I + II	7700200371	
HF16023	Repair kit		7701200374	
HF16024	Brake master cylinder	91, 92, 94, 96, 98, 496, 498, 891, 951, 981, 1151, 1181, 1451	7700573717	
HF16023	Repair kit		7701200374	
HF16026	Brake master cylinder up to MY 4/87	61-12/14, 68-12/14, 75-12/14, 80-12/14, 95-12/14, 103-12/14, 106-14, 110-14	7700004919 7700699033	
HF16025	Repair kit		7701201598	
HF16027	Brake master cylinder from MY 5/87 on	113-12/14, 120-14, 133-14, 145-14	7700012835 7700018167 7700021476	
HF16028	Repair kit		6005002576 6005001485	

The listed spare parts are not original replacement parts. The original part-numbers (OEM) in this catalogue serve only to comparing purposes.

Renault

non original parts	Order no.	Article description	Tractor model	Cross-Ref.
	HF16029	Brake master cylinder piston 19mm	75-32/34, 85-32/34, 90-32/34, 103-52/54, 106-54, 110-54, 120-54, 133-54, 155-54, Ceres 65, 75, 85, 95, Ergos 85, 95, 105, Cergos 330, 340, 350, Ceres 310, 320, 330, 340 Temis 550, 610, 630, 650	7700012835 7700018167 7700021476
	HF16028	Repair kit		6005002576 6005001485
	HF16030	Slave cylinder	91, 92, 94, 95-12/14, 96, 98, 103-12/14, 106-14, 113-12/14, 133-14, 145-14 496, 498, 891, 951, 981, 1151, 1181	7700518258
	HF16031	Repair kit		7701007614 7701007615
	HF16032	Slave cylinder	61-12/14, 68-12/14, 75-12/14, 77-12/14, 80-12/14	7700005709
	HF16033	Repair kit		7701030685
	HF16034	Brake caliper right (Girtrak brake) 2 pcs per wheel	61-12/14, 68-12/14, 75-12/14, 80-12/14, 95-12/14, 103-12/14, 106-14, 110-14, 113-12/14, 120-14, 133-14, 145-14	7701025828 7701030351
	HF16035	Brake caliper left (Girtrak brake) 2 pcs per wheel		7701025827 7701030350
	HF16036	Repair kit for 1 cylinder		7701025829
	HF16037	Wheel brake cylinder	Serie 32, 34, Ceres, Ergos, Cergos, Temis	7700047326 7700015001

Tractor brake parts

The listed spare parts are not original replacement parts. The original part-numbers (OEM) in this catalogue serve only to comparing purposes.

Order no.	Article description	Tractor model	Cross-Ref.	non original parts
HF35008	Disc lining set Ø 102mm with rivets	Aurora 35,45, Sirenetta		
HF17001	Brake disc (lined) Ø 102mm 23 teeth		15154503	
HF17002	Actuating unit Ø 102mm		15954323	
HF35004	Disc lining set Ø 178mm with rivets	Centurion 75 Export Condor 55 synchro Corsaro 70, 70 synchro Corsaro Frutteto Minitaurus 60 synchro Saturno, S. 80 synchro Taurus 60 Export	13654350	
HF17003	Brake disc (lined) Ø 178mm 13 teeth		15854343	
HF17004	Actuating unit		13654323	

The listed spare parts are not original replacement parts. The original part-numbers (OEM) in this catalogue serve only to comparing purposes.

Same

non original parts	Order no.	Article description	Tractor model	Cross-Ref.
	HF17005	Brake disc (lined) Ø 178mm 13 teeth oilbath+mechanical	Condor 55 synchro Explorer 60 II & 60 Minitaurus 60 Frutteto Minitaurus 60 synchro	19454642
	HF17006	Metal disc Ø 184mm		19454650
	HF17007	Brake disc (lined) Ø 178mm 23 teeth oilbath+mechanical	Frutteto 60+70, Solar 50+60 Vigneron 75	25654340
	HF17008	Metal disc Ø 184mm		25654560 17754750
	HF17009	Brake disc (lined) Ø 224mm 27 teeth oilbath+hydraulical or mechanical rear wheel	Buffalo 120, 130 Export Drago 100, 120, Panther 95 Hercules 160 Export Centauro 70 special Centurion 75 special Galaxy 170 Turbo, Mercury 85 special	15454590
	HF17010	Metal disc Ø 228mm		15454600
	HF17011	Actuating unit Ø 224mm		15454610

Tractor brake parts

The listed spare parts are not original replacement parts. The original part-numbers (OEM) in this catalogue serve only to comparing purposes.

Order no.	Article description	Tractor model	Cross-Ref.	non original parts
HF17012	Brake disc (lined) Ø 224mm 27 teeth oilbath front wheel	Antares100+110+130Centauro Export, Centurion 75 Explorer 65, 75, Explorer 65, 80 special, Explorer 70 II, 80 II, Galaxy 170 Turbo, Laser 90, 100, 110, 130, 150T Silver 80, 90, 100-4, 100-6 Titan 145, 160, 190	22454340	
HF17013	Metal disc Ø 228mm		27543510	
HF17014	Brake disc (lined) Ø 282mm 13 teeth oilbath+mechanical rear wheel	Explorer 55, 60, 65 Explorer 60 II, 70 II Explorer 60, 65, 70 special	25554472/10	
HF17015	Brake disc (lined) Ø 282mm 12 teeth oilbath+mechanical rear wheel	Explorer 75, 80, 80 II Explorer 90 II Silver 80, 90, 100-4, 100-6	44554472/10 OO970672	
HF17016	Brake disc (lined) Ø 304mm 12 teeth oilbath+mechanical	Jaguar 95 Export Laser 90, 100, 110, 130 Leopard 85 Export, 90 Turbo Tiger 100	17054340	
HF17017	Brake band hand brake Ø 225mm	Falcon, Minitauro 55, 55, 60 Frutteto, Vigneto 60,	14654113/20	
HF17018	Brake band hand brake Ø 250mm	Centauro 55, 60, 65 Corsaro 70, 70 synchro	15754113/10	

The listed spare parts are not original replacement parts. The original part-numbers (OEM) in this catalogue serve only to comparing purposes.

Same

non original parts	Order no.	Article description	Tractor model	Cross-Ref.
	HF17019	Metal disc Ø 165mm 25 teeth	Centauro 70 Export+Special Centurion 75 special Mercury 85 Export + Special	22454640
	HF17020	Brake lining one-sided		22454580
	HF17021	Brake lining double-sided		22454650
	HF17023	Brake lining one-sided	Jaguar 95 Export Laser 90, 100, 110, 130, Leopard 90 Turbo Tiger 100, Tiger Six 105 Exp. Trident 130 Export Antares100, 110, 130 Aster 60, 70	17154512
	HF17024	Brake lining double-sided		17154592

Tractor brake parts

The listed spare parts are not original replacement parts. The original part-numbers (OEM) in this catalogue serve only to comparing purposes.

Order no.	Article description	Tractor model	Cross-Ref.	non original parts
HF45001	Brake shoe hand brake 250x30	850 Compact, 950 Compact 125DV, SF6900		
HF45003	Brake shoe foot brake 250x60			
HF30048	Brake lining			
HF08025	Wheel brake cylinder piston 22mm			
HF08026	Repair kit			
HF08080	Brake drum 250x30 250x60			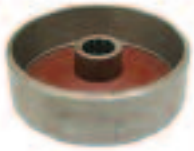
HF45001	Brake shoe hand brake 250x30	125 DVL Super, 1600 Super SF6950VS		
HF03071	Tension spring			
HF45005	Brake shoe foot brake 270x80			
HF03069	Tension spring			
HF08027	Wheel brake cylinder with automatic adjustment piston 38mm			

The listed spare parts are not original replacement parts. The original part-numbers (OEM) in this catalogue serve only to comparing purposes.

Schlüter

non original parts	Order no.	Article description	Tractor model	Cross-Ref.
	HF03080	Brake drum 250x30 270x80	125 DVL Super, 1600 Super SF6950VS	
	HF50001	Brake pad 78x66x15		
	HF08076	Brake disc Ø 274mm		
	HF26001	Brake master cylinder (2 pcs) piston 15mm	1250 VL, 125 DVL, SF4800VS	
	HF26002	Brake master cylinder (2 pcs) piston 22mm	1250 VT6	

Tractor brake parts

The listed spare parts are not original replacement parts. The original part-numbers (OEM) in this catalogue serve only to comparing purposes.

Order no.	Article description	Tractor model	Cross-Ref.	non original parts
HF19001	Brake shoe hand brake 210x30	8060, 8060A, 8070, 8070A, 8080, 8080A, 8090, 8090A	133700340913	
HF19002	Brake shoe 300x60	288, 290, 650A, 658A, 760A, 768A	1295340903 1295340725	
HF19003	Brake lining 60x6x295		1295340011 1288340701	
HF19004	Brake shoe 220x60	650, 650A, 650/50, 658, 760, 768	1295340007 1295340901	
HF19005	Brake lining 60x10x305		1295340010 1295340801	
HF19006	Brake shoe 220x60	658, 760, 768, 768A	1295340902 1295340914	
HF19005	Brake lining 60x10x305		1295340010 1295340801	
HF19007	Brake shoe 200x50	942, 942A, 948, 948A, 8045, 8045A	131700340014	
HF19008	Brake lining (2 pcs) 50x8x122		131700340013	
HF19009	Brake shoe 230x60	8055, 8065, 8075, 8085, 8095, 8100, 8110, 8120, 8130 + Version A	133700340098 133700340914	
HF19010	Brake shoe 120x60	8060, 8060A, 8070, 8070A, 8080, 8080A, 8090, 8090A	133700340100 133700340912	

The listed spare parts are not original replacement parts. The original part-numbers (OEM) in this catalogue serve only to comparing purposes.

Steyr

non original parts	Order no.	Article description	Tractor model	Cross-Ref.
	HF19011	Brake lining 60x5x270	870, 870A, 1090, 1090A	1390340727
	HF19012	Brake lining 60x6x338	80, 84, 86	
	HF19013	Brake lining 60x10x255	430, 540, 540A, 545, 545A, 548, 548A	1192340020 1192341001
	HF19014	Brake lining 60x8x436	180a, 182, 185a, 185	
	HF19015	Brake disc (lined) Ø 242mm 28 teeth	M9078, 9080M, 9083, 9086,9090M, 9094, 9100M	155700340044
	HF19016	Metal disc 155x248mm		133000340022
	HF19017	Actuating unit		133000340015

Tractor brake parts

The listed spare parts are not original replacement parts. The original part-numbers (OEM) in this catalogue serve only to comparing purposes.

Order no.	Article description	Tractor model	Cross-Ref.	non original parts
HF19018	Brake disc (lined) Ø 243mm 28 teeth	CVT 6135, 6145, 6155, 6170, 6190, 6195, 9105, 9115, 9125, 9145 CVT 100, 110, 120, 130, 150, 170	133000340016 133000341001	
HF19019	Metal disc 155x245		133000340022	
HF19020	Actucating unit		133000340015	
HF19021	Brake disc (lined) Ø 327mm 12 teeth	4100, 4110, 4115, 4120, 4130, 6115, 6125, 6135, 6140	5191497	
HF19022	Brake pad 90x15x71	970, C55, C64, C70	135700441804	
HF50004	Brake pad 90x15x73.5	8100, 8110, 8120, 8130, 8060, 8070, 8080, 8090	137700441018	
HF19024	Brake drum 180x60 Brake disc Ø 275mm		137700349025	

The listed spare parts are not original replacement parts. The original part-numbers (OEM) in this catalogue serve only to comparing purposes.

Steyr

non original parts	Order no.	Article description	Tractor model	Cross-Ref.
	HF16030	Slave cylinder rear axle	8180 rear axle	
	HF19026	Wheel brake cylinder 22mm front axle	288, 290, 650A, 658A, 760A, 768A front axle	
	HF19039	Repair kit		
	HF19027	Wheel brake cylinder 28mm	8060, 8060A, 8070, 8070A, 8080, 8080A, 8090, 8090A, 8140, 8160, 8170	133700340034
	HF19028	Repair kit		133700340701
	HF19029	Wheel brake cylinder 44mm	8140, 8165, 8170, 8180	179200440046
	HF19030	Wheel brake cylinder left	9078, 9086, 9094	155700340049
	HF19031	Wheel brake cylinder right		155700340050
	HF19032	Wheel brake cylinder	968	153700340006
	HF19033	Brake master cylinder		133135417

Tractor brake parts

The listed spare parts are not original replacement parts. The original part-numbers (OEM) in this catalogue serve only to comparing purposes.

Order no.	Article description	Tractor model	Cross-Ref.	non original parts
HF19034	Brake master cylinder	8060, 8060A, 8070, 8070A, 8080, 8080A, 8090, 8090A, 8140, 8160, 8170	135700350013	
HF19036	Brake master cylinder 25mm	CVT 120, 130, 150, 170, 6135, 6145, 6155, 6170, 6190, 6195, 9078, 9083, 9086, 9094, 9105, 9115, 9125, 9145	133135155 133135418	
HF19037	Clutch master	9105, 9115, 9125, 9145	133125004	
HF19038	Clutch slave		131723101	

The listed spare parts are not original replacement parts. The original part-numbers (OEM) in this catalogue serve only to comparing purposes.

Valmet

non original parts	Order no.	Article description	Tractor model	Cross-Ref.
	HF35003	Disc lining set 4 pieces with rivets Ø 165mm	500, 502, 504, 602, 604	583331
	HF35004	Disc lining set 4 pieces with rivets Ø 178mm	700, 702, 703, 802, 803, 903	671050
	HF35005	Disc lining set 4 pieces with rivets Ø 200mm	900, 1100, 1102, 1103, 1203	820230
	HF20001	Brake disc (lined) oilbath Ø 227mm 27 teeth	305, 355, 405, 455, 505, 605, 655, 705, 755, 805, 855, 905, 6000, 6100, 6300, 6400, 6600, 6800, 8000, 8100, 8200, 8400	30184800 32800500
	HF20002	Metal disc Ø 227mm		411040 45037300
	HF20003	Actuating unit		411020

Tractor brake parts

The listed spare parts are not original replacement parts. The original part-numbers (OEM) in this catalogue serve only to comparing purposes.

Order no.	Article description	Tractor model	Cross-Ref.	non original parts
HF20004	Brake master cylinder (aluminium)	700, 702, 703, 802, 803, 900, 903, 1100, 1102, 1103, 1203	661910	
HF20005	Repair kit		663240	
HF20006	Brake master cylinder (cast iron)		661911	
HF20007	Repair kit		663241	
HF20008	Expansion reservoir		813140	
HF20009	Brake master cylinder	505, 605, 615, 655, 705, 715, 755, 805, 815, 855, 905, 6000, 6100, 6300, 6400, 6600, 6800, 8000, 8100, 8200, 8400	30294600	
HF20010	Clutch slave	505, 605, 655, 705, 755, 805, 855, 905, 6000, 6100, 6300, 6400, 6600, 6800, 8000, 8100, 8200, 8400	30181500	
HF20011	Repair kit		30418200	
HF20012	Clutch master	6000, 6100, 6300, 6400, 6600, 8000, 8100, 8200, 8400	33031410	

The listed spare parts are not original replacement parts. The original part-numbers (OEM) in this catalogue serve only to comparing purposes.

Zetor

non original parts	Order no.	Article description	Tractor model	Cross-Ref.
	HF21001	Brake disc (lined)	3320, 3340, 4320, 4340, 5211, 5245, 5320, 5340, 6211, 6245, 6320, 6340, 7211, 7245, 7320T, 7340T, 7711, 7745, 7711T, 7745T	72112680
	HF21002	Actuating unit		72452603
	HF21003	Disc lining set with rivets Ø 228x152x4.2	8011, 8045, 8111, 8145, 8211, 8245, 9111, 9145, 9211, 9245, 10011, 10045, 10111, 10145, 10211, 10245, 11211, 11245, 12111, 12145, 12211, 12245, 14145, 14245, 16145, 16245	80227031
	HF21004	Brake disc (lined) Ø 228mm		80227010
	HF21005	Actuating unit Ø 228mm		80227001 80227009
	HF21006	Brake shoe (complete)	2011 up to 4011 2511 up to 4511 4712, 4718, 4911, 5011, 5511, 5545, 5611, 5645, 5647	49112615 952606
	HF21007	Spring		67112606

Tractor brake parts

The listed spare parts are not original replacement parts. The original part-numbers (OEM) in this catalogue serve only to comparing purposes.

Order no.	Article description	Tractor model	Cross-Ref.	non original parts
HF21008	Brake shoe (complete)	3320 up to 6340 5211 up to 6245 5711, 5718, 5745, 5748, 5911, 5945, 6711, 6718, 6911, 6945, 7011, 7045, 7745	69112615 69112623	
HF21009	Spring		67112606	
HF21010	Brake band hand brake	2011, 2511, 3011, 3511, 3513, 3545, 4011, 4511, 4611, 4712, 4718, 4911, 5011, 5511, 5545, 5611, 5642, 5645	37112901 55112906 952907	
HF21011	Brake band hand brake	2320, 3340, 4320, 4340, 5211, 5213, 5243, 5245, 5320, 5340, 5711, 5718, 5745, 5911, 5945, 6011, 6045, 6211, 6245, 6320, 6340, 6711, 6718, 6748, 6911, 6945, 7011, 7045, 7211, 7245, 7320, 7340, 7711, 7745	67112901	
HF21012	Brake master cylinder	2011, 3011, 4011, 2511, 3511, 4511, 4712, 4718, 4911, 5011, 5511, 5545, 5611, 5645, 5647, 8011, 8045, 8111, 8145, 9111, 9145, 10011, 10045, 10111	975032	
HF21013	Repair kit		10942699	

The listed spare parts are not original replacement parts. The original part-numbers (OEM) in this catalogue serve only to comparing purposes.

Zetor

non original parts	Order no.	Article description	Tractor model	Cross-Ref.
	HF21012	Brake master cylinder with fixed pedals	3320, 3340, 4320, 4340, 5320, 5340, 6320, 6340, 5711, 5718, 5745, 5748, 5911, 5945, 6711, 6718, 6911, 6945, 7011, 7045, 7745	975032
	HF21014	Brake master cylinder with suspended pedals	8211, 8245, 9211, 9245, 10211, 10245, 11211, 11245, 12211, 12245, 14245, 16245	69112717 86227903
	HF21015	Repair kit		10942799
	HF21016	Wheel brake cylinder right drum brake system	2011, 3011, 4011, 2511, 3511, 4511, 3320, 3340, 4320, 4340, 5320, 5340, 6320, 6340, 5211, 5245, 6211, 6245, 4712, 4718, 4911, 5011, 5511, 5545, 5611, 5645, 5647, 5711, 5718, 5745, 5748, 5911, 5945, 6711, 6718, 6911, 6945, 7011, 7045, 7745	67112604
	HF21017	Wheel brake cylinder left drum brake system		67112603
	HF21018	Cylinder right disc brake	3320, 3340, 4320, 4340, 5320, 5340, 6320, 6340, 5211, 5245, 6211, 6245, 7211, 7245, 7711, 7745, 8011, 8045, 8111, 8145, 8211, 8245, 9111, 9145, 9211, 9245, 10011, 10045, 10111, 10145, 10211, 10245, 11211, 11245, 12111, 12145, 12211, 12245, 14145, 14256, 16145, 16245	83227912 83227908 83227918 83227902
	HF21019	Cylinder left disc brake		83227911 83227907 83227917 83227901 83227903

Tractor brake parts

The listed spare parts are not original replacement parts. The original part-numbers (OEM) in this catalogue serve only to comparing purposes.

Hand brake lever

Order no.	Article description	Sheath (length)	Cable (length)	non original parts
HF65001	Hand brake lever with control cable	2300 mm thickness 12mm	5200 mm strand thickn. 5mm	
HF65002	Hand brake lever with control cable	3500 mm thickness 12mm	6200 mm strand thickn. 5mm	

Open-end towbar / Jaw coupling

Order no.	Article	Towed weight	Coupling load	Hole centre distance	Bore	non original parts
HF65003	Jaw coupling	3000kg	1000kg	120x55mm	14.5mm	

Ball towbar / Ball coupling

Order no.	Article	Towed weight	Coupling load	Hole centre distance	D-Value	non original parts
HF65004	Ball coupling	3500kg	250kg	83x56mm	24.8	

Ball bolt

Order no.	Article	Towed weight	Ball diameter	Thread length		non original parts
HF65005	Ball bolt	2000kg	50mm	140mm		
HF65006	Ball bolt	3500kg	50mm	100mm		

The listed spare parts are not original replacement parts. The original part-numbers (OEM) in this catalogue serve only to comparing purposes.

Brake shoes

non original parts	Order no.	Article description / Cross-Ref.	with	without Reverse automatic
	HF45052	Brake shoe drum 250 x 60 ADR		x
	HF45053	Spring (2 pieces per wheel)		
	HF45030	Brake shoe drum 300 x 60 ADR 30 G		x
	HF45054	Spring (2 pieces per wheel)		
	HF45055	Brake shoe drum 300 x 90 ADR 30 S		x
	HF45056	Spring (2 pieces per wheel)		
	HF45031	Brake shoe drum 350 x 60 ADR 35 G		x
	HF45057	Spring 2 pieces per wheel		
	HF45029	Brake shoe drum 400 x 80 ADR 40 G		x
	HF45058	Spring (2 pieces per wheel)		
	HF45038	Brake shoe primary drum 300 x 60 ADR 30 GA	x	
	HF45039	Brake shoe secondary drum 300 x 60 ADR 30 GA	x	
	HF45040	Brake shoe primary drum 300 x 90 ADR 30 SA	x	
	HF45041	Brake shoe secondary drum 300 x 90 ADR 30 SA	x	

Trailer spare parts

The listed spare parts are not original replacement parts. The original part-numbers (OEM) in this catalogue serve only to comparing purposes.

Order no.	Article description / Cross-Ref.		with	without Reverse automatic		non original parts
HF45059	Brake shoe primary drum 400 x 80	ADR 40 GA	x			
HF45060	Brake shoe secondary drum 400 x 80	ADR 40 GA	x			
HF45061	Brake shoe drum 300 x 135	ADR 314 S			high speed	
HF45062	Spring (2 pieces per wheel)					
HF45063	Brake shoe drum 406 x 120 old version (roll + eye)	ADR A 910			high speed	
HF45064	Spring 110 mm					
HF45065	Spring 235 mm					
HF45066	Brake shoe drum 406 x 120 new version	ADR 412 S			high speed	
HF45064	Spring 110 mm					
HF45065	Spring 235 mm					
HF45067	Brake shoe drum 406 x 140 old version (roll + eye)	ADR A 940			high speed	
HF45064	Spring 110 mm					
HF45065	Spring 235 mm					
HF45068	Brake shoe drum 406 x 140 new version	ADR 414 S			high speed	
HF45064	Spring 110 mm					
HF45065	Spring 235 mm					

The listed spare parts are not original replacement parts. The original part-numbers (OEM) in this catalogue serve only to comparing purposes.

Brake shoes

non original parts	Order no.	Article description / Cross-Ref.		with	without Reverse automatic	
	HF45069	Brake shoe drum 300 x 60	AL-KO 3060		x	
	HF45070	Spring				
	HF45071	Brake shoe primary drum 300 x 60	AL-KO 3061N	x		
	HF45072	Brake shoe secondary drum 300 x 60	AL-KO 3061N	x		
	HF45070	Spring				
	HF45073	Brake shoe drum 300 x 80 4 pcs with springs	AL-KO 3081	x		
	HF45074	Brake shoe drum 250 x 40	BPW / Peitz		x	
	HF45075	Spring (2 pcs per wheel)				
	HF45033	Brake shoe drum 300 x 60	BPW / Peitz		x	
	HF45076	Spring (1 pc per wheel)				
	HF45077	Spring (1 pc per wheel)				
	HF45078	Brake shoe drum 300 x 60	BPW / Peitz S 3006-5 SK		x	
	HF45079	Spring (1 pc per wheel)				
	HF45080	Spring (1 pc per wheel)				
	HF45081	Pressure spring (2 pcs per wheel)				
	HF45032	Brake shoe drum 350 x 60	BPW / Peitz		x	
	HF45076	Spring (1 pc per wheel)				
	HF45082	Spring (1 pc per wheel)				

Trailer spare parts

The listed spare parts are not original replacement parts. The original part-numbers (OEM) in this catalogue serve only to comparing purposes.

Order no.	Article description / Cross-Ref.		with	without Reverse automatic		non original parts
HF45083	Brake shoe drum 400 x 80	BPW / Peitz		x		
HF45084	Spring (1pc per wheel)					
HF45077	Spring (1pc per wheel)					
HF45085	Brake shoe drum 400 x 120	BPW / Peitz		x		
HF45084	Spring (1pc per wheel)					
HF45077	Spring (1pc per wheel)					
HF45086	Brake shoe drum 400 x 120	BPW / Peitz			wedge brake	
HF45087	Brake shoe drum 300 x 60 4 pcs with springs	BPW / Peitz S3006-5 RASK	x			
HF45073	Brake shoe drum 300 x 80 4 pcs with springs	BPW / Peitz S 3008 - RA	x			
HF45088	Brake shoe primary drum 310 x 80	BPW / Peitz SM 318 R	x			
HF45089	Brake shoe secondary drum 310 x 80	SM 318 R	x			
HF45090	Spring (1pc per wheel)					
HF45091	Spring (1pc per wheel)					
HF45092	Pressure spring (2 pcs per wheel)					
HF45093	Brake shoe drum 310 x 80	BPW / Peitz	x			
HF45084	Spring (1pc per wheel)					
HF45077	Spring (1pc per wheel)					

The listed spare parts are not original replacement parts. The original part-numbers (OEM) in this catalogue serve only to comparing purposes.

Brake shoes

non original parts	Order no.	Article description / Cross-Ref.	with	without Reverse automatic
	HF45034	Brake shoe drum 300 x 60 ESFA		x
	HF45094	Spring (2 pcs per wheel)		
	HF45035	Brake shoe drum 350 x 60 ESFA		x
	HF45095	Spring (2 pcs per wheel)		
	HF45036	Brake shoe drum 350 x 80 ESFA		x
	HF45095	Spring (2 pcs per wheel)		
	HF45096	Brake shoe drum 400 x 80 ESFA		x
	HF45097	Spring (2 pcs per wheel)		
	HF45037	Brake shoe drum 400 x 100 ESFA		x
	HF45097	Spring (2 pcs per wheel)		
	HF45098	Brake shoe drum 400 x 130 ESFA		x
	HF45099	Spring (2 pcs per wheel)		
	HF45130	Brake shoe drum 200 x 40 FAD		x

Trailer spare parts

The listed spare parts are not original replacement parts. The original part-numbers (OEM) in this catalogue serve only to comparing purposes.

Order no.	Article description / Cross-Ref.		with	without Reverse automatic		non original parts
HF45030	Brake shoe drum 300 x 60	FAD 3006/2A		x		
HF45054	Spring (2 pcs per wheel)					
HF45055	Brake shoe drum 300 x 90	FAD 3009/3A		x		
HF45056	Spring (2 pcs per wheel)					
HF45031	Brake shoe drum 350 x 60	FAD 3506/3A		x		
HF45057	Spring (2 pcs per wheel)					
HF45029	Brake shoe drum 400 x 80	FAD 4008/1		x		
HF45058	Spring (2 pcs per wheel)					
HF45100	Brake shoe primary drum 300 x 60	FAD 3006R	x			
HF45101	Brake shoe secondary drum 300 x 60	FAD 3006R	x			
HF45102	Spring (1pc per wheel)					
HF45103	Spring (1pc per wheel)					
HF45104	Brake shoe primary drum 300 x 90	FAD 3009R	x			
HF45105	Brake shoe secondary drum 300 x 90	FAD 3009R	x			
HF45102	Spring (1pc per wheel)					
HF45103	Spring (1pc per wheel)					
HF45106	Brake shoe drum 400 x 120 old version with flat cam	FAD 4012		x		
HF45054	Spring (2 pcs per wheel)					

The listed spare parts are not original replacement parts. The original part-numbers (OEM) in this catalogue serve only to comparing purposes.

Brake shoes

non original parts	Order no.	Article description / Cross-Ref.		with	without Reverse automatic	
	HF45107	Brake shoe new version with S-cam drum 400 x 120	FAD 4012			high speed
	HF45108	Brake shoe old version with flat cam drum 400 x 130	FAD		x	
	HF45054	Spring (2 pcs per wheel)				
	HF45109	Brake shoe new version with S-cam drum 400 x 130	FAD			high speed
	HF45110	Brake shoe drum 300 x 60	Knott 30-3129, 30-4305		x	
	HF45111	Spring (1pc per wheel)				
	HF45080	Spring (1pc per wheel)				
	HF45081	Pressure spring (2 pcs per wheel)				
	HF45078	Brake shoe drum 300 x 60	Knott 30-2265, 30-2355		x	
	HF45079	Spring (1pc per wheel)				
	HF45080	Spring (1pc per wheel)				
	HF45081	Pressure spring (2 pcs per wheel)				
	HF45112	Brake shoe drum 300 x 60	Knott 30-4010	x		
	HF45113	Brake shoe drum 300 x 60	Knott 30-4010			
	HF45114	Spring (1pc per wheel)				
	HF45075	Spring (1pc per wheel)				
	HF45081	Pressure spring (2 pcs per wheel)				
	HF45087	Brake shoe drum 300 x 60 4 pcs with springs	Knott 30-2434	x		

Trailer spare parts

The listed spare parts are not original replacement parts. The original part-numbers (OEM) in this catalogue serve only to comparing purposes.

Order no.	Article description / Cross-Ref.		with	without Reverse automatic		non original parts
HF45033	Brake shoe drum 300 x 60	Nieper		x		
HF45076	Spring (1pc per wheel)					
HF45077	Spring (1pc per wheel)					
HF45032	Brake shoe drum 350 x 60	Nieper		x		
HF45076	Spring (1pc per wheel)					
HF45082	Spring (1pc per wheel)					
HF45115	Brake shoe drum 300 x 60	Rinner		x		
HF45076	Spring (1pc per wheel)					
HF45077	Spring (1pc per wheel)					
HF45116	Brake shoe drum 300 x 80	Rinner		x		
HF45076	Spring (1pc per wheel)					
HF45077	Spring (1pc per wheel)					
HF45032	Brake shoe drum 350 x 60	Rinner		x		
HF45076	Spring (1pc per wheel)					
HF45082	Spring (1pc per wheel)					
HF45117	Brake shoe drum 350 x 80	Rinner		x		
HF45118	Spring (2pcs per wheel)					
HF45119	Spring (2pcs per wheel)					
HF45120	Brake shoe primary drum 300 x 60	Rinner	x			
HF45121	Brake shoe secondary drum 300 x 60	Rinner	x			
HF45122	Spring set (all springs for 1 axle)					

The listed spare parts are not original replacement parts. The original part-numbers (OEM) in this catalogue serve only to comparing purposes.

Brake shoes

non original parts	Order no.	Article description / Cross-Ref.		with	without Reverse automatic	
	HF45123	Brake shoe primary drum 300 x 80	Rinner	x		
	HF45124	Brake shoe secondary drum 300 x 80	Rinner	x		
	HF45121	Spring set (springs for 1 axle)				
	HF45074	Brake shoe drum 250 x 40	Zapp		x	
	HF45075	Spring (2 pcs per wheel)				
	HF45033	Brake shoe drum 300 x 60	Zapp		x	
	HF45076	Spring (1pc per wheel)				
	HF45077	Spring (1pc per wheel)				
	HF45032	Brake shoe drum 350 x 60	Zapp		x	
	HF45076	Spring (1pc per wheel)				
	HF45082	Spring (1pc per wheel)				
	HF45083	Brake shoe drum 400 x 80	Zapp		x	
	HF45084	Spring (1pc per wheel)				
	HF45077	Spring (1pc per wheel)				
	HF45085	Brake shoe drum 400 x 120	Zapp		x	
	HF45084	Spring (1pc per wheel)				
	HF45077	Spring (1pc per wheel)				

Trailer spare parts

The listed spare parts are not original replacement parts. The original part-numbers (OEM) in this catalogue serve only to comparing purposes.

Order no.	Manufacturer / Brake size			Bearing pair		Bolt circle / Hub bore		non original parts
HF60001	ADR	250 x 60		30210 / 30207	drum	205 x 6		
HF60002	ADR	300 x 60		30208 / 30211	drum	205 x 6		
HF60003	ADR	300 x 60		30208 / 32013	drum	205 x 6		
HF60004	ADR	300 x 90		30213 / 32210	drum	205 x 6		
HF60005	ADR	300 x 135		32212 / 32215	drum	205 x 6		
HF60006	ADR	400 x 80		32212 / 32215	drum	335 x 10		
HF60007	ADR	406 x 120		32217 / 32214	drum	335 x 10		
HF60008	ADR	300 x 60			drum ring	205 x 6	161	
HF60009	ADR	300 x 90			drum ring	205 x 6	161	
HF60010	ADR	300 x 90			drum ring	275 x 8	220	
HF60011	ADR	300 x 135			drum ring	205 x 6	161	
HF60012	ADR	300 x 135			drum ring	275 x 8	220	
HF60013	ADR	350 x 60			drum ring	275 x 8	220	
HF60014	ADR	400 x 80			drum ring	275 x 8	220	
HF60015	ADR	400 x 80			drum ring	335 x 10	280	
HF60016	ADR	400 x 100			drum ring	335 x 10		
HF60017	ADR	400 x 120			drum ring	335 x 10		
HF60018	ADR	406 x 120			drum ring	275 x 8	220	
HF60019	ADR	406 x 120			drum ring	335 x 10	280	
HF60020	ADR	406 x 140			drum ring	275 x 8	220	
HF60021	ADR	406 x 140			drum ring	335 x 10	280	
HF60022	ADR	height	115 mm	30208 / 32011	hub	205 x 6 / M18	161	
HF60023	ADR	height	147 mm	30213 / 32210	hub	205 x 6 / M18	161	
HF60024	ADR	height	155 mm	32212 / 32215	hub	205 x 6 / M18	161	
HF60025	ADR	height	176 mm	32212 / 32215	hub	205 x 6 / M18	161	
HF60026	ADR	height	152 mm	32212 / 32215	hub	205 x 6 / M18	161	
HF60027	ADR	height	152 mm	32212 / 32215	hub	275 x 8 / M18	220	
HF60028	ADR	height	176 mm	32212 / 32215	hub	275 x 8 / M20	220	
HF60029	ADR	height	148 mm	30213 / 32210	hub	275 x 8 / M18	220	
HF60030	ADR	height	160 mm	32213 / 32216	hub	275 x 8 / M18	220	
HF60031	ADR	height	177 mm	32213 / 32216	hub	275 x 8 / M20	220	
HF60032	ADR	height	184 mm	32213 / 32216	hub	275 x 8 / M20	220	
HF60033	ADR	height	158 mm	32213 / 32216	hub	275 x 8	220	
HF60034	ADR	height	170 mm	32215 / JM718149	hub	335 x 10	280	
HF60035	ADR	height	180 mm	32215 / JM718149	hub	335 x 10	280	
HF60036	ADR	height	177 mm	32213 / 32216	hub	335 x 10 / M22	280	
HF60037	ADR	height	167 mm	32214 / 33020	hub	275 x 8 / M20	220	
HF60038	ADR	height	165 mm	32214 / 32217	hub	335 x 10 / M20	280	
HF60039	ADR	height	203 mm	33215 / 33118	hub	335 x 10 / M22	280	

The listed spare parts are not original replacement parts. The original part-numbers (OEM) in this catalogue serve only to comparing purposes.

Brake drums

non original parts	Order no.	Manufacturer / Brake size	Bearing pair	Bolt circle / Hub bore
	HF60054	BPW / Peitz 250 x 40	LM 501310 / L 44610	205 x 6 height 146
	HF60055	BPW / Peitz 300 x 60	30206 / 30209	205 x 6 height 161
	HF60056	BPW / Peitz 300 x 60	30207 / 32011	205 x 6 height 168
	HF60057	BPW / Peitz 300 x 60	30210 / 32207	205 x 6 height 188.5
	HF60058	BPW / Peitz 300 x 60	30210 / 32207	205 x 6 height 173
	HF60059	BPW / Peitz 300 x 60	32207 / 32013	205 x 6 height 173
	HF60060	BPW / Peitz 300 x 60	32207 / 32211	205 x 6 height 188.5
	HF60061	BPW / Peitz 300 x 60	LM501310 / L44610	205 x 6 height 161
	HF60062	BPW / Peitz 300 x 60 SN	32207 / 32211	205 x 6 height 195
	HF60063	BPW / Peitz 300 x 80 RA	30210 / 32207	205 x 6 height 199
	HF60064	BPW / Peitz 300 x 80 RA	32013 / 32207	205 x 6 height 199
	HF60065	BPW / Peitz 310 x 80	30210 / 32207	205 x 6 height 198
	HF60066	BPW / Peitz 310 x 80	30210 / 32214	205 x 6 height 113
	HF60067	BPW / Peitz 310 x 80	30210 / 32014	205 x 6 height 210
	HF60068	BPW / Peitz 310 x 80	32013 / 32207	205 x 6 height 198
	HF60069	BPW / Peitz 350 x 60	30210 / 32207	205 x 6 height 235
	HF60070	BPW / Peitz 350 x 60	32013 / 32207	205 x 6 height 235
	HF60071	BPW / Peitz 350 x 60	LM501310 / L44610	205 x 6 height 210.5
	HF60072	ESFA 300 x 60	30207 / 30211 drum	205 x 6
	HF60073	ESFA 300 x 60	30208 / 30211 drum	205 x 6
	HF60074	ESFA 300 x 60	30210 / 30207 drum	205 x 6
	HF60075	ESFA 300 x 60	30211 / 30208 drum	205 x 6
	HF60076	ESFA 350 x 60	30211 / 30206 drum	205 x 6
	HF60077	ESFA 350 x 60	30212 / 30209 drum	205 x 6
	HF60078	ESFA 400 x 80	30213 / 30216 drum	275 x 8
	HF60079	ESFA 400 x 100	33018 / 32213 drum	275 x 8
	HF60080	ESFA 400x80	32216 / 30213 drum ring	275 x 8
	HF60081	ESFA 400x100	33018 / 32213 drum ring	275 x 8
	HF60082	ESFA 400x100	33018 / 32213 drum ring	335 x 10
	HF60083	ESFA	30209 / 30213 hub	
	HF60084	ESFA 350x60	30209 / 30212 hub	205 x 6
	HF60085	ESFA	30209 / 32014 hub	
	HF60121	Rinner 300 x 60	30211 / 30208 drum	205 x 6
	HF60122	Rinner 300 x 60	30211 / 30208 drum	205 x 6
	HF60123	Rinner 300 x 60	30211 / 32208 drum	205 x 6
	HF60124	Rinner 300 x 60	32212 / 32208 drum	205 x 6
	HF60125	Rinner 300 x 80	30211 / 30208 drum	205 x 6
	HF60126	Rinner 300 x 80	32212 / 32208 drum	205 x 6
	HF60127	Rinner 350 x 80	32208 / 32213 drum	205 x 6
	HF60128	Rinner 350 x 80	32208 / 32214 drum	205 x 6
	HF60129	Rinner 350 x 80	32208 / 32214 drum	275 x 8
	HF60130	Rinner 350 x 80	32210 / 32214 drum	205 x 6
	HF60131	Rinner 350 x 80	32210 / 32214 drum	275 x 8
	HF60132	Rinner 350 x 80	32214 / 32208 drum	275 x 8

Trailer spare parts

The listed spare parts are not original replacement parts. The original part-numbers (OEM) in this catalogue serve only to comparing purposes.

Order no.	Manufacturer / Brake size		Bearing pair		Bolt circle / Hub bore			non original parts
HF60086	FAD	250 x 60	30210 / 30207	drum	205 x 6			
HF60087	FAD	300 x 60	30208 / 30212	drum	205 x 6			
HF60088	FAD	300 x 60	30209 / 30212	drum	205 x 6			
HF60089	FAD	300 x 60	32210 / 32216	drum	205 x 6			
HF60090	FAD	300 x 60	32213 / 32210	drum	275 x 8			
HF60091	FAD	300 x 90	30210 / 7213	drum	205 x 6			
HF60092	FAD	400 x 80	32213 / 30208	drum	275 x 8			
HF60093	FAD	400 x 120		drum	335 x 10			
HF60094	FAD	300 x 60		drum ring	205 x 6	height	95 mm	
HF60095	FAD	300 x 90	30208 / 30212	drum ring	205 x 6	height	120mm	
HF60096	FAD	300 x 90	30212 / 30208	drum ring	275 x 8			
HF60097	FAD	300 x 150		drum ring	205 x 6			
HF60098	FAD	350 x 60		drum ring	205 x 6			
HF60099	FAD	400 x 120		drum ring	335 x 10			
HF60100	FAD	300 x 60	30209 / 30212	hub	205 x 6			
HF60101	FAD	300 x 60	32210 / 32213	hub	205 x 6			
HF60102	FAD	400 x 80	32213 / 32217	hub	275 x 8			
HF60103	FAD	400 x 120	32213 / 32217	hub	275 x 8			
HF60104	FAD	400 x 120	33213 / 32218	hub	335 x 10			
HF60105	Knott	300 x 60	30207 / 30211	drum	205 x 6	height	154mm	
HF60106	Knott	300 x 60	30207 / 30211	drum	205 x 6	height	154mm	
HF60107	Knott	300 x 60	30207 / 30211	drum	205 x 6	height	154mm	
HF60108	Knott	300 x 60	30207 / 30211	drum	205 x 6	height	155mm	
HF60109	Knott	300 x 60	30207 / 30211	drum	205 x 6	height	155mm	
HF60110	Knott	300 x 60	30207 / 30211	drum	205 x 6	height	187mm	
HF60111	Knott	300 x 60	30207 / 30211	drum	205 x 6	height	187mm	
HF60112	Knott	300 x 60	30207 / 30210	drum	205 x 6	height	187mm	
HF60113	Knott	300 x 60	Kom. 49/88/46	drum	205 x 6			
HF60114	Knott	300 x 80	32208 / 32211	drum	205 x 6			
HF60115	Knott	300 x 120	32208 / 32211	drum	205 x 6			
HF60116	Knott	300 x 120	32208 / 32211	drum	205 x 6			
HF60117	Knott	300 x 120	32208 / 32211	drum	205 x 6			
HF60118	Knott	325 x 80	33208 / 32211	drum	205 x 6			
HF60119	Knott	325 x 80	33208 / 32211	drum	205 x 6			
HF60120	Knott	325 x 80	33208 / 32211	drum	205 x 6			

The listed spare parts are not original replacement parts. The original part-numbers (OEM) in this catalogue serve only to comparing purposes.

Wheel stud (ribbed) locating bolt

non original parts	Order no.	Manufacturer / Thread	Ribbing pattern / Ribbing length	Total length
	HF61001	Wheel stud ADR M12x1.5	13.0 mm	36 mm
	HF61002	Wheel stud ADR M14x1.5	15.5 mm	41 mm
	HF61003	Wheel stud ADR M16x1.5	17.2 mm	45 mm
	HF61004	Wheel stud ADR M18x1.5	19.5 mm 11 mm	49 mm
	HF61005	Wheel stud ADR M18x1.5	19.5 mm 24 mm	61 mm
	HF61006	Wheel stud ADR M18x1.5	19.5 mm 26 mm	75 mm
	HF61007	Wheel stud ADR M18x1.5	19.5 mm 12 mm	50 mm
	HF61008	Wheel stud ADR M18x1.5	19.5 mm 25 mm	60 mm
	HF61009	Wheel stud ADR M20x1.5	21.5 mm 15 mm	59 mm
	HF61010	Wheel stud ADR M20x1.5	21.5 mm 24 mm	74 mm
	HF61011	Wheel stud ADR M22x1.5	24.5 mm 14 mm	71 mm
	HF61012	Wheel stud ADR M22x1.5	24.5 mm 31 mm	72 mm
	HF61013	Wheel stud ADR M22x1.5	24.5 mm 30 mm	90 mm
	HF61014	Wheel stud Bourg. M18x1.5	20.5 mm 17 mm	71 mm
	HF61015	Wheel stud Bourg. M18x1.5	20.5 mm 17 mm	48 mm
	HF61016	Wheel stud Bourg. M22x1.5	24.5 mm 26 mm	74 mm
	HF61017	Wheel stud BPW 7/16x20	17.0 mm	46 mm
	HF61018	Wheel stud BPW 1/ 2 x20	17.0 mm	40 mm
	HF61019	Wheel stud BPW M12x1.5	17.0 mm 17 mm	36 mm
	HF61020	Wheel stud BPW M12x1.5	14.5 mm 10 mm	41 mm
	HF61021	Wheel stud BPW M12x1.5	14.5 mm 10 mm	36 mm
	HF61022	Wheel stud BPW M12x1.5	14.5 mm 10 mm	54 mm
	HF61023	Wheel stud BPW M14x1.5	17.0 mm	35 mm
	HF61024	Wheel stud BPW M14x1.5	14.5 mm 10 mm	45 mm
	HF61025	Wheel stud BPW M14x1.5	17.0 mm 9 mm	43 mm
	HF61026	Wheel stud BPW M14x1.5	17.0 mm 12 mm	49 mm
	HF61027	Wheel stud BPW M18x1.5	21.0 mm 22 mm	57 mm
	HF61028	Wheel stud BPW M18x1.5	20.0 mm 12 mm	51 mm
	HF61029	Wheel stud BPW M18x1.5	20.0 mm 18 mm	55 mm
	HF61030	Wheel stud BPW M18x1.5	20.0 mm	58 mm
	HF61031	Wheel stud BPW M18x1.5	20.0 mm	73 mm
	HF61032	Wheel stud BPW M18x1.5	21.0 mm 10 mm	45 mm
	HF61033	Wheel stud BPW M18x1.5	21.0 mm 25 mm	63 mm
	HF61034	Wheel stud BPW M20x1.5	22.5 mm 27 mm	69 mm
	HF61035	Wheel stud BPW M20x1.5	20.4 mm	55 mm
	HF61036	Wheel stud BPW M20x1.5	20.4 mm	75 mm
	HF61037	Wheel stud BPW M22x1.5	22.5 mm 40 mm	80 mm
	HF61038	Wheel stud BPW M22x1.5	22.5 mm 20 mm	45 mm
	HF61039	Wheel stud BPW M22x1.5	24.4 mm	83 mm
	15612	Wheel stud ESFA M18x1.5	21.0 mm 16 mm	51 mm
	15703	Wheel stud ESFA M18x1.5	21.0 mm 26 mm	71 mm

The listed spare parts are not original replacement parts. The original part-numbers (OEM) in this catalogue serve only to comparing purposes.

Order no.	Manufacturer / Thread		Ribbing pattern / Ribbing length		Total length	non original parts
HF61042	Wheel stud FAD	M18x1.5	19.5 mm	10.5 mm	49 mm	
HF61043	Wheel stud FAD	M18x1.5	19.5 mm	21.0 mm	61 mm	
HF61044	Wheel stud FAD	M20x1.5	21.5 mm	10.5 mm	62 mm	
HF61045	Wheel stud FAD	M20x1.5	21.5 mm	25.0 mm	73 mm	
HF61046	Wheel stud FAD	M22x1.5	24.5 mm	27.0 mm	79 mm	
HF61047	Wheel stud Rinner	M18x1.5	20.5 mm	17 mm	51 mm	
HF61048	Wheel stud Rinner	M18x1.5	20.5 mm	17 mm	61 mm	
HF61049	Wheel stud Rinner	M20x1.5	20.5 mm	19 mm	64 mm	

The listed spare parts are not original replacement parts. The original part-numbers (OEM) in this catalogue serve only to comparing purposes.

Sealing rings

non original parts	Order no.	Article description	Manufacturer / Dimension		Bearing pair
	HF62001	gasket ring	ADR	26x52	
	HF62002	gasket ring	ADR	20x47	
	HF62003	gasket ring	ADR	30x62	
	HF62004	gasket ring	ADR	35x72	
	HF62005	gasket ring	ADR	40x80	
	HF62006	gasket ring	ADR	45x85	
	HF62007	gasket ring	ADR	50x90	
	HF62008	gasket ring	ADR	55x100	
	HF62009	gasket ring	ADR	65x100	
	HF62010	gasket ring	ADR	65x120	
	HF62011	gasket ring	ADR	70x125	
	HF62012	gasket ring	ADR	75x130	
	HF62013	gasket ring	ADR	77x130	
	HF62014	gasket ring	ADR	80x140	
	HF62015	gasket ring	ADR	82x140	
	HF62016	gasket ring	ADR	114x146	
	HF62017	gasket ring	ADR	125x145	
	HF62018	gasket ring	ADR	140x160	
	HF62019	gasket ring	ADR	87x150	
	HF62020	gasket ring	ADR	92x150	
	HF62021	gasket ring	ADR	102x150	
	HF62022	gasket ring	Burgogne	55x127	
	HF62023	gasket ring	Burgogne	65x127	
	HF62024	gasket ring	Burgogne	65x150	
	HF62025	gasket ring	Burgogne	80x171	
	HF62026	gasket ring / thrust ring	BPW	89x50x11	30207 / 32011
	HF62027	gasket ring / nilos ring	BPW	88x50x6	
	HF62028	gasket ring / labyrinthring	BPW	76x55x12	LM 501310 / L44610
	HF62029	gasket ring / thrust ring	BPW	74.5x50x15	
	HF62030	gasket ring / labyrinthring	BPW	90x65x12	30210 / 32207
	HF62031	gasket ring / thrust ring	BPW	65x56x6	
	HF62032	gasket ring / labyrinthring	BPW	100x77x11	32207 / 32013
	HF62033	gasket ring / thrust ring	BPW	100x67x12	
	HF62034	gasket ring / thrust ring	BPW	75x61x6	32207 / 32211
	HF62035	gasket ring / labyrinthring	BPW	100.5x60x12	
	HF62036	gasket ring / labyrinthring	BPW	110x73x14.5	30210 / 32214
	HF62037	gasket ring / thrust ring	BPW	85x74x7	
	HF62038	gasket ring	BPW	70x48.5x7	
	HF62039	gasket ring	BPW	77x139.5x14.5	

The listed spare parts are not original replacement parts. The original part-numbers (OEM) in this catalogue serve only to comparing purposes.

Order no.	Article description	Manufacturer / Dimension	Bearing pair	non original parts
HF62040	gasket ring	ESFA 89x50		
HF62041	gasket ring	ESFA 98x55		
HF62042	gasket ring	ESFA 108x60		
HF62043	gasket ring	ESFA 118x65		
HF62044	gasket ring	ESFA 128x75		
HF62045	gasket ring	ESFA 138x80		
HF62046	gasket ring	FAD 71x42x10	30205 / 30207	
HF62047	gasket ring	FAD 110x60	30209 / 30212	
HF62048	gasket ring	FAD 100x55	30208 / 30211	
HF62049	gasket ring	FAD 85x53x8	30206 / 30209	
HF62050	gasket ring	FAD 120x65	30210 / 30213	
HF62051	gasket ring	FAD 140x100x12	32213 / 32216	
HF62052	gasket ring	Knott 100x55x7	30207 / 30211	
HF62053	gasket ring / nilos ring	Knott 88x50x6	30207 / 30210	
HF62054	gasket ring / distance ring	Knott 90x50x10		
HF62055	gasket ring / nilos ring	Knott 97x55x6	30208 / 32211	
HF62056	gasket ring / distance ring	Knott 100x55x8		
HF62057	gasket ring	Rinner 100x55		
HF62058	gasket ring	Rinner 110x60		
HF62059	gasket ring	Rinner 120x65		
HF62060	gasket ring	Rinner 125x70		

The listed spare parts are not original replacement parts. The original part-numbers (OEM) in this catalogue serve only to comparing purposes.

Hub caps

non original parts	Order no.	Manufacturer	Ø (mm)
	HF63001	ADR	47
	HF63002	ADR	52
	HF63003	ADR	62
	HF63004	ADR	72
	HF63005	ADR	80
	HF63006	ADR	90
	HF63007	ADR	100
	HF63008	ADR	110
	HF63009	ADR	120
	HF63010	ADR	125 z.Schr.
	HF63011	ADR	130 z.Schr.
	HF63012	AL-KO	40
	HF63013	AL-KO	48
	HF63014	AL-KO	55
	HF63015	AL-KO	56
	HF63016	AL-KO	60
	HF63017	AL-KO	62
	HF63018	AL-KO	66
	HF63019	AL-KO	70
	HF63020	AL-KO	85
	HF63021	BPW	42
	HF63022	BPW	48
	HF63023	BPW	53
	HF63024	BPW	73
	HF63025	BPW	M50x1.5
	HF63026	BPW	M56x2
	HF63027	BPW	M115x2
	HF63028	ESFA	M64.5x1.5
	HF63029	ESFA	M74.5x1.5
	HF63030	ESFA	M82.5x1.5
	HF63031	ESFA	M92.5x1.5
	HF63032	ESFA	M113x1.5
	HF63033	ESFA	M122x1.5
	HF63034	ESFA	M132x1.5
	HF63035	FAD	80
	HF63036	FAD	90
	HF63037	FAD	100
	HF63038	FAD	110
	HF63039	FAD	120

Order no.	Manufacturer	Ø (mm)
HF63040	Knott	42
HF63041	Knott	48
HF63042	Knott	52
HF63043	Knott	55
HF63044	Knott	64
HF63045	Knott	65
HF63046	Knott	72
HF63047	Knott	80.2
HF63048	Nieper	42
HF63049	Nieper	47
HF63050	Nieper	53
HF63051	Nieper	64.2
HF63052	Nieper	72
HF63053	Nieper	M48x1.5
HF63054	Nieper	M54x1.5
HF63055	Peitz	48
HF63056	Peitz	50
HF63057	Peitz	65
HF63058	Peitz	72
HF63059	Peitz	72
HF63060	Peitz	80
HF63061	Peitz	86
HF63062	Peitz	90
HF63063	Peitz	120
HF63064	Rinner	80
HF63065	Rinner	82
HF63066	Rinner	90
HF63067	Hahn	52
HF63068	Hahn	59
HF63069	Hahn	62
HF63070	Hahn	M74x1

The listed spare parts are not original replacement parts. The original part-numbers (OEM) in this catalogue serve only to comparing purposes.

Order no.	Total length (mm)	Length of coils (mm)	Wire thickness (mm)		non original parts
HF64001	80	47	3		
HF64002	100	42	3		
HF64003	110	55	4		
HF64004	122	68	4		
HF64005	150	90	6		
HF64006	160	90	4		
HF64007	176	36	3		
HF64008	180	70	4		
HF64009	187	75	4		
HF64010	220	44	3		
HF64011	230	185	6		
HF64012	120	45	3		
HF64013	132	75	4		
HF64014	142	85	3.5		
HF64015	155	70	4		
HF64016	175	80	4.5		

The listed spare parts are not original replacement parts. The original part-numbers (OEM) in this catalogue serve only to comparing purposes.

Brake linings

non original parts	Order no.	Manufacturer	Drum (mm)	Width (mm)	Thickn.(mm)	Length (mm)	Number / Rivet	
	HF30095	ADR	300	135.0	11.0	270.0	10	8x18
	HF30096	ADR	406	120.0	10.0	189.0	8	8x18
	HF30097	ADR	406	140.0	15.0	189.0	8	8x18
	HF30002	Bautz	180	20.0	4.0	203.0	8	3x8
	HF30009	Bautz	180	30.0	4.0	188.0	7	3x8
	HF30021	Bautz	300	50.0	6.0	287.0	14	4x10
	HF30022	Bautz	300	50.0	6.0	327.0	16	4x10
	HF30004	BPW	250	40.0	5.0	255.0	10	4x10
	HF30028	BPW	300	60.0	5.0	300.0	16	4x10
	HF30049	BPW	310	80.0	8.0	307.0	16	6x15
	HF30029	BPW	350	60.0	5.0	351.0	10	6x10
	HF30036	BPW	400	80.0	8.0	404.0	10	8x15
	HF30051	BPW	400	120.0	10.0	189.0	8	8x18
	HF30003	Claas	250	40.0	5.0	243.0	8	4x10
	HF30002	Eicher	180	20.0	4.0	203.0	8	3x8
	HF30006	Eicher	180	40.0	4.5	189.0	7	3x8
	HF30009	Eicher	180	30.0	4.0	188.0	7	3x8
	HF30019	Eicher	180	50.0	4.7	187.0	8	4x8
	HF30027	Eicher	180	50.0	4.5	172.0	8	4x8
	HF30026	Eicher	200	50.0	5.0	192.0	10	4x10
	HF30008	Eicher	250	40.0	5.0	272.0	10	4x10
	HF30024	Eicher	300	50.0	6.0	234.0	12	4x10
	HF30022	Eicher	300	50.0	6.0	327.0	16	4x10
	HF30023	Eicher	300	50.0	6.0	327.0	16	5x10
	HF30025	Eicher	300	50.0	6.0	243.0	12	5x12
	HF30030	Eicher	400	60.0	8.0	436.0	16	5x12
	HF30031	Eicher	400	60.0	8.0	324.0	12	5x12
	HF30045	Eicher	400	80.0	8.0	436.0	16	5x15
	HF30054	ESFA	300	60.0	5.0	300.0	12	4x10
	HF30094	ESFA	350	60.0	5.0	351.0	13	4x10
	HF30055	ESFA	350	60.0	5.0	351.0	14	4x10
	HF30095	ESFA	350	80.0	5.0	370.0	14	4x10
	HF30061	ESFA	400	100.0	8.0	400.0	10	6x15
	HF30085	FAD old version	400	120.0	8.0	189.0	8	8x18
		hole distance						
		80mm						
	HF30057	FAD old version	400	120.0	10.0	189.0	8	8x18
		hole distance						
		80mm						
	HF30101	FAD new version	406	120.0	10.0	189.0	8	8x18
		hole distance						
		87mm						

Agriculture vehicles

The listed spare parts are not original replacement parts. The original part-numbers (OEM) in this catalogue serve only to comparing purposes.

Order no.	Manufacturer	Drum (mm)	Width (mm)	Thickn.(mm)	Length (mm)	Number / Rivet	non original parts
HF30002	Fahr	180	20.0	4.0	203.0	8 3x8	
HF30006	Fahr	180	40.0	4.5	189.0	7 3x8	
HF30009	Fahr	180	30.0	4.0	188.0	7 3x8	
HF30021	Fahr	300	50.0	6.0	287.0	14 4x10	
HF30022	Fahr	300	50.0	6.0	327.0	16 4x10	
HF30030	Fahr	400	60.0	8.0	436.0	16 5x12	
HF30031	Fahr	400	60.0	8.0	324.0	12 5x12	
HF30032	Fahr	400	80.0	8.0	324.0	12 5x12	
HF30045	Fahr	400	80.0	8.0	436.0	16 5x15	
HF30002	Fendt	180	20.0	4.0	203.0	8 3x8	
HF30009	Fendt	180	30.0	4.0	188.0	7 3x8	
HF30027	Fendt	180	50.0	4.5	172.0	8 3x8	
HF30037	Fendt	180	60.0	5.0	188.0	10 4x10	
HF30008	Fendt	250	40.0	5.0	272.0	10 4x10	
HF30048	Fendt	250	60.0	4.8	272.0	14 5x12	
HF30022	Fendt	300	50.0	6.0	327.0	16 4x10	
HF30021	Fendt	300	50.0	6.0	287.0	14 4x10	
HF30035	Fendt	350	60.0	6.0	287.0	12 4x10	
HF30044	Fendt	350	60.0	6.0	370.0	16 4x10	
HF30030	Fendt	400	60.0	8.0	436.0	16 5x12	
HF30031	Fendt	400	60.0	8.0	324.0	12 5x12	
HF30002	Güldner	180	20.0	4.0	203.0	8 3x8	
HF30006	Güldner	180	40.0	4.5	189.0	7 3x8	
HF30009	Güldner	180	30.0	4.0	188.0	7 3x8	
HF30019	Güldner	180	50.0	4.7	187.0	8 4x8	
HF30027	Güldner	180	50.0	4.5	172.0	8 4x8	
HF30026	Güldner	200	50.0	5.0	192.0	10 4x10	
HF30008	Güldner	250	40.0	5.0	272.0	10 4x10	
HF30023	Güldner	300	50.0	6.0	327.0	16 5x10	
HF30025	Güldner	300	50.0	6.0	243.0	12 5x10	
HF30009-12	Hanomag	180	30.0	4.0	188.0	7 3x8	
HF30041	Hanomag	350	60.0	7.0	283.0	12 6x12	
HF30042	Hanomag	350	60.0	7.0	380.0	16 6x12	
HF30030	Hanomag	400	60.0	8.0	436.0	16 5x12	
HF30031	Hanomag	400	60.0	8.0	324.0	12 5x12	
HF30045	Hanomag	400	80.0	8.0	436.0	16 5x15	

The listed spare parts are not original replacement parts. The original part-numbers (OEM) in this catalogue serve only to comparing purposes.

Brake linings

non original parts	Order no.	Manufacturer	Drum (mm)	Width (mm)	Thickn.(mm)	Length (mm)	Number / Rivet
	HF30002	Holder	180	20.0	4.0	203.0	8 3x8
	HF30009	Holder	180	30.0	4.0	188.0	7 3x8
	HF30009	Hurth	180	30.0	4.0	188.0	7 3x8
	HF30033	Hurth	180	70.0	5.0	209.0	10 5x10
	HF30008	Hurth	250	40.0	5.0	272.0	10 4x10
	HF30021	Hurth	300	50.0	6.0	287.0	14 4x10
	HF30022	Hurth	300	50.0	6.0	327.0	16 4x10
	HF30030	Hurth	400	60.0	8.0	436.0	16 5x12
	HF30031	Hurth	400	60.0	8.0	324.0	12 5x12
	HF30002	John Deere	180	20.0	4.0	203.0	8 3x8
	HF30006	John Deere	180	40.0	4.5	189.0	7 3x8
	HF30009	John Deere	180	30.0	4.0	188.0	7 3x8
	HF30021	John Deere	300	50.0	6.0	287.0	14 4x10
	HF30022	John Deere	300	50.0	6.0	327.0	16 4x10
	HF30009	Deutz / KHD	180	30.0	4.0	188.0	7 3x8
	HF30018	Deutz / KHD	200	45.0	6.0	115.0	4 5x12
	HF30008	Deutz / KHD	250	40.0	5.0	272.0	10 4x10
	HF30047	Deutz / KHD	250	70.0	5.0	272.0	16 4x10
	HF30021	Deutz / KHD	300	50.0	6.0	287.0	14 4x10
	HF30022	Deutz / KHD	300	50.0	6.0	327.0	16 4x10
	HF30023	Deutz / KHD	300	50.0	6.0	327.0	16 5x10
	HF30025	Deutz / KHD	300	50.0	6.0	243.0	12 5x10
	HF30041-12	Deutz / KHD	350	60.0	7.0	283.0	12 6x12
	HF30042	Deutz / KHD	350	60.0	7.0	380.0	16 6x12
	HF30030	Deutz / KHD	400	60.0	8.0	436.0	16 5x12
	HF30031	Deutz / KHD	400	60.0	8.0	324.0	12 5x12
	HF30045	Deutz / KHD	400	80.0	8.0	436.0	16 5x15

The listed spare parts are not original replacement parts. The original part-numbers (OEM) in this catalogue serve only to comparing purposes.

Order no.	Manufacturer	Drum (mm)	Width (mm)	Thickn.(mm)	Length (mm)	Number / Rivet	non original parts
HF30002	Knott	180	20.0	4.0	203.0	8 3x8	
HF30006	Knott	180	40.0	4.5	189.0	7 3x8	
HF30009	Knott	180	30.0	4.0	188.0	7 3x8	
HF30019	Knott	180	50.0	4.7	187.0	8 4x8	
HF30027	Knott	180	50.0	4.5	172.0	8 4x8	
HF30037	Knott	180	60.0	5.0	187.0	10 4x8	
HF30007	Knott	200	30.0	4.0	239.0	7 4x8	
HF30026	Knott	200	50.0	5.0	192.0	10 4x10	
HF30008	Knott	250	40.0	5.0	272.0	10 4x10	
HF30047	Knott	250	70.0	5.0	272.0	16 4x10	
HF30021	Knott	300	50.0	6.0	287.0	14 4x10	
HF30022	Knott	300	50.0	6.0	327.0	16 4x10	
HF30029	Knott	350	60.0	5.0	351.0	10 6x10	
HF30036	Knott	400	80.0	8.0	404.0	10 8x15	
HF30045	Knott	400	80.0	8.0	436.0	16 5x15	
HF30002	Kramer	180	20.0	4.0	203.0	8 3x8	
HF30006	Kramer	180	40.0	4.5	189.0	7 3x8	
HF30009	Kramer	180	30.0	4.0	188.0	7 3x8	
HF30008	Kramer	250	40.0	5.0	272.0	10 4x10	
HF30020	Kramer	300	50.0	6.0	234.0	12 4x10	
HF30022	Kramer	300	50.0	6.0	327.0	16 4x10	
HF30044	Kramer	350	60.0	6.0	381.0	16 4x10	
HF30006	Lanz	180	40.0	4.5	189.0	7 3x8	
HF30009	Lanz	180	30.0	4.0	188.0	7 3x8	
HF30019	Lanz	180	50.0	4.7	187.0	8 4x8	
HF30027	Lanz	180	50.0	4.5	172.0	8 4x8	
HF30033	Lanz	180	70.0	5.0	209.0	10 5x10	
HF30026	Lanz	200	50.0	5.0	192.0	10 4x10	
HF30008	Lanz	250	40.0	5.0	272.0	10 4x10	
HF30021	Lanz	300	50.0	6.0	287.0	14 4x10	
HF30022	Lanz	300	50.0	6.0	327.0	16 4x10	
HF30023	Lanz	300	50.0	6.0	327.0	16 5x10	
HF30025	Lanz	300	50.0	6.0	243.0	12 5x10	
HF30041-12	Lanz	350	60.0	7.0	283.0	12 6x12	
HF30042	Lanz	350	60.0	7.0	380.0	16 6x12	

The listed spare parts are not original replacement parts. The original part-numbers (OEM) in this catalogue serve only to comparing purposes.

Brake linings

non original parts	Order no.	Manufacturer	Drum (mm)	Width (mm)	Thickn.(mm)	Length (mm)	Number / Rivet	
	HF30002	MAN	180	20.0	4.0	203.0	8	3x8
	HF30006	MAN	180	40.0	4.5	189.0	7	3x8
	HF30009	MAN	180	30.0	4.0	188.0	7	3x8
	HF30019	MAN	180	50.0	4.7	187.0	8	4x8
	HF30026	MAN	200	50.0	5.0	192.0	10	4x10
	HF30008	MAN	250	40.0	5.0	272.0	10	4x10
	HF30021	MAN	300	50.0	6.0	287.0	14	4x10
	HF30022	MAN	300	50.0	6.0	327.0	16	4x10
	HF30023	MAN	300	50.0	6.0	327.0	16	5x10
	HF30025	MAN	300	50.0	6.0	243.0	12	5x10
	HF30035	MAN	350	60.0	6.0	287.0	12	4x10
	HF30044	MAN	350	60.0	6.0	370.0	16	4x10
	HF30030	MAN	400	60.0	8.0	436.0	16	5x12
	HF30031	MAN	400	60.0	8.0	324.0	12	5x12
	HF30009	M.F.	180	30.0	4.0	188.0	7	3x8
	HF30009	Perrot	180	30.0	4.0	188.0	7	3x8
	HF30102	Perrot	180	30.0	4.0	188.0	10	3x8
	HF30037	Perrot	180	60.0	5.0	187.0	10	4x8
	HF30007	Perrot	200	30.0	4.0	239.0	7	4x8
	HF30008	Perrot	250	40.0	5.0	272.0	10	4x10
	HF30103	Perrot	270	60.0	6.1	254.0	14	5x10
	HF30020	Perrot	300	50.0	6.0	234.0	12	4x10
	HF30022	Perrot	300	50.0	6.0	327.0	16	4x10
	HF30021	Perrot	300	50.0	6.0	287.5	14	4x10
	HF30041-12	Perrot	350	60.0	7.0	283.0	12	6x12
	HF30042	Perrot	350	60.0	7.0	380.0	16	6x12
	HF30030	Perrot	400	60.0	8.0	436.0	16	5x12
	HF30031	Perrot	400	60.0	8.0	324.0	12	5x12
	HF30045	Perrot	400	80.0	8.0	436.0	16	5x15
	HF30002	Porsche	180	20.0	4.0	203.0	8	3x8
	HF30006	Porsche	180	40.0	4.5	189.0	7	3x8
	HF30009	Porsche	180	30.0	4.0	188.0	7	3x8
	HF30008	Porsche	250	40.0	5.0	272.0	10	4x10
	HF30023	Porsche	300	50.0	6.0	327.0	16	5x10
	HF30025	Porsche	300	50.0	6.0	243.0	12	5x10
	HF30030	Porsche	400	60.0	8.0	436.0	16	5x12
	HF30031	Porsche	400	60.0	8.0	324.0	12	5x12

The listed spare parts are not original replacement parts. The original part-numbers (OEM) in this catalogue serve only to comparing purposes.

Brake linings

Order no.	Manufacturer	Drum (mm)	Width (mm)	Thickn.(mm)	Length (mm)	Number / Rivet	non original parts
HF30002	Schlüter	180	20.0	4.0	203.0	8 3x8	
HF30006	Schlüter	180	40.0	4.5	189.0	7 3x8	
HF30009	Schlüter	180	30.0	4.0	188.0	7 3x8	
HF30019	Schlüter	180	50.0	4.7	187.0	8 4x8	
HF30033	Schlüter	180	70.0	5.0	209.0	10 5x10	
HF30026	Schlüter	200	50.0	5.0	192.0	10 4x10	
HF30008	Schlüter	250	40.0	5.0	272.0	10 4x10	
HF30021	Schlüter	300	50.0	6.0	287.0	14 4x10	
HF30022	Schlüter	300	50.0	6.0	327.0	16 4x10	
HF30041-12	Schlüter	350	60.0	7.0	283.0	12 6x12	
HF30042	Schlüter	350	60.0	7.0	380.0	16 6x12	
HF30030	Schlüter	400	60.0	8.0	436.0	16 5x12	
HF30031	Schlüter	400	60.0	8.0	324.0	12 5x12	

Roll lining material universal

Order no.	Width (mm)	Thickness (mm)		non original parts
HF90002	30	4.0		
HF90011	30	5.0		
HF90004	40	4.0		
HF90012	40	5.0		
HF90005	50	4.0		
HF90014	50	5.0		
HF90027	50	6.0		
HF90015	60	5.0		
HF90028	60	6.0		
HF90035	60	7.0		
HF90043	60	8.0		
HF90016	70	5.0		
HF90029	70	6.0		
HF90036	70	7.0		
HF90017	80	5.0		
HF90030	80	6.0		
HF90037	80	7.0		
HF90045	80	8.0		

The listed spare parts are not original replacement parts. The original part-numbers (OEM) in this catalogue serve only to comparing purposes.

Brake axle with reverse drive automatic / expander lever brake

non original parts

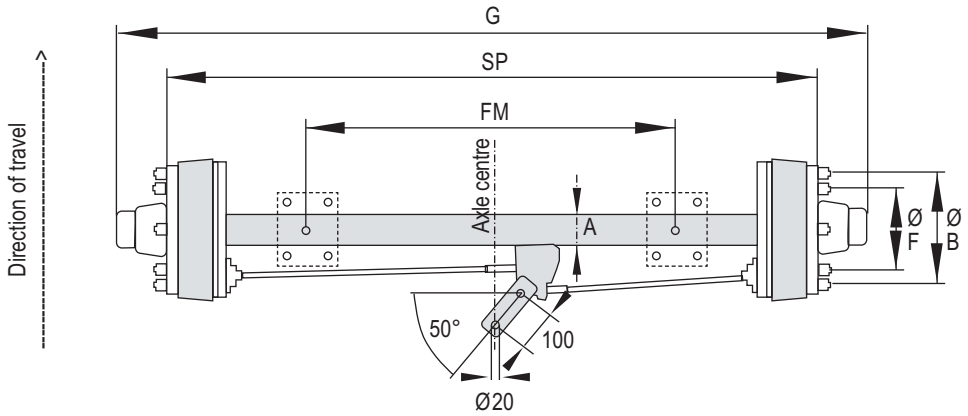

G Total length
SP Track
FM Spring centre
A Axle cross section
B Bolt circle
F Hub

Brake axle

non original parts

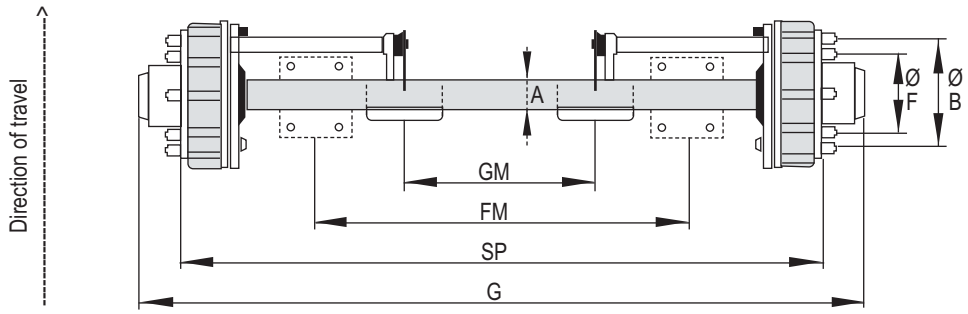

G Total length
SP Track
FM Spring centre
GM Base plate centre
A Axle cross section
B Bolt circle
F Hub

Steering axle

non original parts

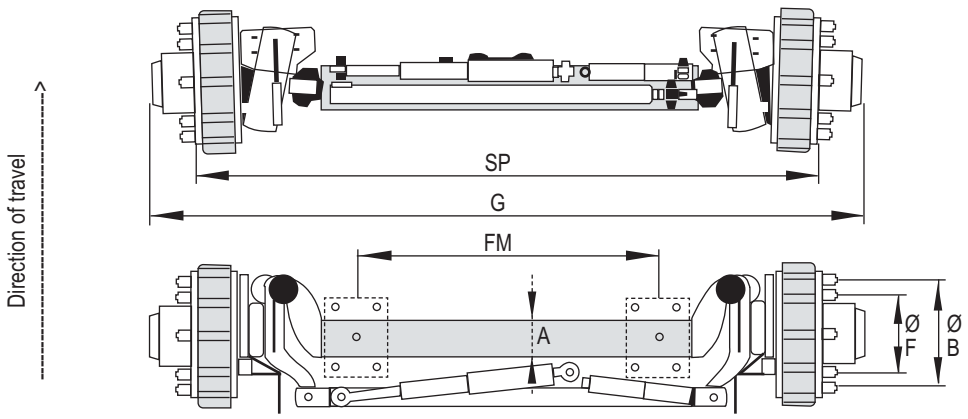

G Total length
SP Track
FM Spring centre
GM Base plate centre
A Axle diameter
B Bolt circle
F Hub

The listed spare parts are not original replacement parts. The original part-numbers (OEM) in this catalogue serve only to comparing purposes.

Order no.	Square	Axle load (kg) 25km/h			Bolt NC	Hub F	Bolt circle B	Track SP	Offset	non original parts
		2axle	1axle	2tandem						
HF70001	40	1100	1300	850	4 M 12 x 1.5	60	100	1000	-	* western european makes BPW / ADR / Rinner / FAD
HF70002	40	1400	1650	1100	5 M 14 x 1.5	67	112	1500	-	
HF70003	40	1400	1650	1100	5 M 14 x 1.5	67	112	1500	40	
HF70004	45	1850	2200	1650	5 M 14 x 1.5	67	112	1250	40	
HF70005	45	1850	2200	1650	5 M 14 x 1.5	67	112	1360	40	
HF70006	45	1850	2200	1650	5 M 14 x 1.5	67	112	1500	40	
HF70007	45	1850	2200	1650	5 M 14 x 1.5	67	112	1700	40	
HF70008	45	1850	2200	1650	5 M 14 x 1.5	67	112	1500	-	
HF70009	55	3300	3000	2500	6 M 18 x 1.5	161	205	1500	-	
HF70010	55	3300	3000	2500	6 M 18 x 1.5	161	205	1600	-	
HF70011	55	3300	3000	2500	6 M 18 x 1.5	161	205	1700	-	
HF70012	55	3300	3000	2500	6 M 18 x 1.5	161	205	1800	-	
HF70013	60	4000	4800	3200	6 M 18 x 1.5	161	205	1360	-	
HF70014	60	4000	4800	3200	6 M 18 x 1.5	161	205	1500	-	
HF70015	60	4000	4800	3200	6 M 18 x 1.5	161	205	1600	-	
HF70016	60	4000	4800	3200	6 M 18 x 1.5	161	205	1650	-	
HF70017	60	4000	4800	3200	6 M 18 x 1.5	161	205	1700	-	
HF70018	70	6000	7000	5000	6 M 18 x 1.5	161	205	1500	-	
HF70019	70	6000	7000	5000	6 M 18 x 1.5	161	205	1600	-	
HF70020	70	6000	7000	5000	6 M 18 x 1.5	161	205	1650	-	
HF70021	70	6000	7000	5000	6 M 18 x 1.5	161	205	1700	-	
HF70022	70	6000	7000	5000	6 M 18 x 1.5	161	205	1750	-	
HF70023	70	6000	7000	5000	6 M 18 x 1.5	161	205	1850	-	
HF70024	70	6800	8100	5500	6 M 18 x 1.5	161	205	1900	-	
HF70025	70	6000	7000	5000	6 M 18 x 1.5	161	205	2000	-	
HF70026	70	6000	7000	5000	6 M 18 x 1.5	161	205	2200	-	
HF70027	80	6800	8100	5500	6 M 18 x 1.5	161	205	1800	-	

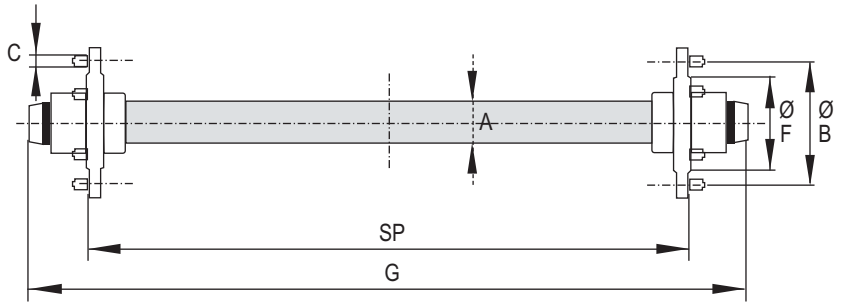

The listed spare parts are not original replacement parts. The original part-numbers (OEM) in this catalogue serve only to comparing purposes.

Brake axles without reverse drive

non original parts	Order no.	Square	Axle load (kg) 25km/h			Axle load (kg) 40km/h			Brake load per kg		Bolt NC
			2axle	1axle	2tandem	2axle	1axle	2tandem	25km/h	40km/h	
* BPW / ADR / Rinner / FAD	HF70028	40	1100	1300	850	900	1050	750	-	-	4 M 12 x 1.5
	HF70029	45	1850	2200	1650	1650	1950	1450	1600	1200	5 M 14 x 1.5
	HF70030	45	1850	2200	1650	1650	1950	1450	1600	1200	5 M 14 x 1.5
	HF70031	45	1850	2200	1650	1650	1950	1450	1600	1200	5 M 14 x 1.5
	HF70032	45	1850	2200	1650	1650	1950	1450	1600	1200	5 M 14 x 1.5
	HF70033	50	3300	3900	2500	2700	3200	2000	3000	1800	6 M 18 x 1.5
	HF70034	60	4800	5700	3900	4100	4950	3300	4000	2250	6 M 18 x 1.5
	HF70035	60	4800	5700	3900	4100	4950	3300	4000	2250	6 M 18 x 1.5
	HF70036	60	4800	5700	3900	4100	4950	3300	4000	2250	6 M 18 x 1.5
	HF70037	60	4800	5700	3900	4100	4950	3300	4000	2250	6 M 18 x 1.5
	HF70038	60	4000	4800	2800	3500	4200	2500	3000	1800	6 M 18 x 1.5
	HF70039	60	4800	5700	3900	4100	4950	3300	4000	2250	6 M 18 x 1.5
	HF70040	70	6000	7000	5500	4600	5500	3700	3000	1800	6 M 18 x 1.5
	HF70041	70	6800	8100	5500	5800	6900	4700	4000	2250	6 M 18 x 1.5
	HF70042	70	6800	8100	5500	5800	6900	4700	4000	2250	6 M 18 x 1.5
	HF70043	70	6800	8100	5500	5800	6900	4700	4000	2250	6 M 18 x 1.5
	HF70044	70	6800	8100	5500	5800	6900	4700	4000	2250	6 M 18 x 1.5
	HF70045	80	9000	10800	8000	7500	9000	6700	4000	2250	8 M 18 x 1.5
	HF70046	80	9000	10800	8000	7500	9000	6700	5000	3600	8 M 20 x 1.5
	HF70047	80	9000	10800	8000	7500	9000	6700	5000	3600	8 M 20 x 1.5
	HF70048	90	9000	10800	8000	7500	9000	6700	5000	3600	8 M 18 x 1.5
	HF70049	90	9000	10800	8000	7500	9000	6700	5000	3600	8 M 18 x 1.5
	HF70050	90	10000	12000	9000	9000	10500	8000	5000	3600	8 M 20 x 1.5
	HF70051	90	10000	12000	9000	9000	10500	8000	5000	3600	8 M 22 x 1.5
	HF70052	100	12500	15000	11000	11000	12500	9500	5000	3600	8 M 22 x 1.5

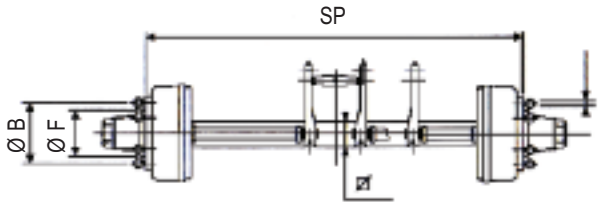

Axles

The listed spare parts are not original replacement parts. The original part-numbers (OEM) in this catalogue serve only to comparing purposes.

Hub F	Bolt circle B	Wheel brake*	Track*SP	Offset*	Brake compensator
				* (mm)	
60	100	140 x 30	1000	-	centre
67	112	250 x 40	1250	40	centre
67	112	250 x 40	1360	40	centre
67	112	250 x 40	1500	40	centre
67	112	250 x 40	1500	-	centre
161	205	300 x 60	1700	-	centre
161	205	300 x 90	1360	-	200 left
161	205	300 x 90	1360	-	centre
161	205	300 x 90	1500	-	200 left
161	205	300 x 90	1500	-	centre
161	205	300 x 60	1700	-	centre
161	205	300 x 90	1700	-	centre
161	205	300 x 60	2200	-	centre
161	205	300 x 90	1600	-	200 left
161	205	300 x 90	1600	-	centre
161	205	300 x 90	1700	-	200 left
161	205	300 x 90	1700	-	centre
221	275	300 x 90	1600	-	centre
221	275	400 x 80	1650	-	200 left
221	275	400 x 80	2020	-	200 left
221	275	400 x 80	1900	-	200 left
221	275	400 x 80	1900	-	centre
221	275	400 x 80	1800	-	centre
280	335	400 x 80	1980	-	250 left
280	335	400 x 80	1950	-	200 left

non original parts

* BPW / ADR / Rinner / FAD

Brake axles without reverse drive

non original parts	Order no.	Type	Axle load 25km/h	Square*	Track*SP	Drum*	Num. holes	Spring centre	Brake rod
			1axle		*(mm)				
	HF70053	RIN	4000	55	1000	300x60	6 holes		150 left
	HF70054	RIN	5000	60	1250	300x60	6 holes		150 left
	HF70055	RIN	5000	60	1350	300x60	6 holes		200 left
	HF70056	RIN	5000	60	1350	300x60	6 holes		centre
	HF70057	RIN	5000	60	1450	300x60	6 holes		200 left
	HF70058	RIN	5000	60	1500	300x60	6 holes		200 left
	HF70059	RIN	5000	60	1650	300x60	6 holes		200 left
	HF70060	RIN	5000	60	1750	300x60	6 holes		250 left
	HF70061	BPW	5000	70	1450	310x80	6 holes	860	250 left
	HF70062	BPW	5000	70	1650	310x80	6 holes	1060	250 left
	HF70063	BPW	5000	70	1850	310x80	6 holes	1060	250 left
	HF70064	BPW	5000	70	1850	310x80	6 holes	1200	250 left
	HF70065	BPW	5000	70	2000	310x80	6 holes	1060	250 left
	HF70066	BPW	5000	70	2000	310x80	6 holes	1200	250 left
	HF70067	RIN	6000	70	1500	300x60	6 holes		200 left
	HF70068	RIN	6000	70	1500	300x60	6 holes		centre
	HF70069	RIN	6000	70	1650	300x60	6 holes		200 left
	HF70070	RIN	6000	70	1650	300x60	6 holes		centre
	HF70071	RIN	6000	70	1750	300x60	6 holes		250 left
	HF70072	RIN	6000	70	1750	300x60	6 holes		centre
	HF70073	RIN	6000	70	1850	300x60	6 holes		250 left
	HF70074	RIN	6000	70	1850	300x60	6 holes		centre
	HF70075	BPW	7500	90	1850	400x80	8 holes	1060	250 left
	HF70076	BPW	7500	90	1850	400x80	8 holes	1200	250 left
	HF70077	BPW	7500	90	2000	400x80	8 holes	1060	250 left
	HF70078	BPW	7500	90	2000	400x80	8 holes	1200	250 left
	HF70079	FAD	8500	90	1750	300x90	8 holes		250 left
	HF70080	FAD	8500	90	1850	300x90	8 holes		250 left
	HF70081	FAD	8500	90	2000	300x90	8 holes		250 left
	HF70082	FAD	9000	90	1850	400x80	8 holes		250 left
	HF70083	FAD	9000	90	2000	400x80	8 holes		250 left
	HF70084	FAD	11500	90	1850	400x80	10 holes		250 left
	HF70085	FAD	11500	90	2000	400x80	10 holes		250 left
	HF70086	FAD	12500	100	1850	400x100 G	10 holes		GS-550
	HF70087	FAD	12500	100	2000	400x100 G	10 holes		GS-750
	HF70088	BPW	12500	120	2050	400x120 G	10 holes	1060	GS-750
	HF70089	BPW	12500	120	2050	400x120 G	10 holes	1200	GS-750
	HF70090	BPW	12500	120	2150	400x120 G	10 holes	1060	GS-750

The listed spare parts are not original replacement parts. The original part-numbers (OEM) in this catalogue serve only to comparing purposes.

Order no.	Type	Axle load 25km/h	Square*	Track*SP	Drum*	Num. holes	Angle	Brake rod	non original parts
		1axle		*(mm)					
HF70111	RIN	4000	55	1000	300x60	6 holes	45	150 left	
HF70112	RIN	5000	60	1250	300x60	6 holes	45	150 left	
HF70113	RIN	5000	60	1350	300x60	6 holes	45	200 left	
HF70114	RIN	5000	60	1450	300x60	6 holes	45	200 left	
HF70115	FAD	6000	70	1450	300x60	6 holes	45	200 left	
HF70116	RIN	6000	70	1500	300x60	6 holes	45	200 left	
HF70117	RIN	6000	70	1650	300x60	6 holes	45	200 left	
HF70118	RIN	6000	70	1650	300x60	6 holes	straight	centre	
HF70119	RIN	6000	70	1750	300x60	6 holes	45	250 left	
HF70120	FAD	6000	70	1750	300x60	6 holes	45	250 left	
HF70121	RIN	6000	70	1750	300x60	6 holes	straight	centre	
HF70122	RIN	6000	70	1850	300x80	6 holes	45	200 left	
HF70123	FAD	6000	70	1850	300x60	6 holes	45	250 left	
HF70124	RIN	6000	70	1850	300x80	6 holes	straight	centre	
HF70125	RIN	8000	80	1850	300x60	8 holes	45	250 left	
HF70126	FAD	8500	90	1750	300x90	8 holes	45	250 left	
HF70127	FAD	8500	90	1850	300x90	8 holes	45	250 left	
HF70128	FAD	8500	90	2000	300x90	8 holes	45	250 left	

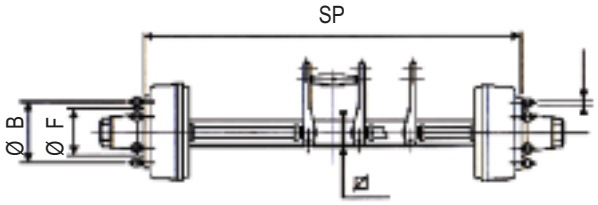

The listed spare parts are not original replacement parts. The original part-numbers (OEM) in this catalogue serve only to comparing purposes.

Brake axles with reversing drive

non original parts	Order no.	Square*	Axle load (kg) 25km/h			Axle load (kg) 40km/h			Brake load per kg		Bolt NC
* ADR			2axle	1axle	2tandem	2axle	1axle	2tandem	25km/h	40km/h	
	HF70091	45	1850	2000	1000	-	-	-	1600	-	5 M 14 x 1.5
	HF70092	45	1850	2000	1000	-	-	-	1600	-	5 M 14 x 1.5
	HF70093	55	3300	3600	2200	2800	3000	2000	3000	2000	6 M 18 x 1.5
	HF70094	70	6000	7000	5000	4600	5500	3700	3000	1800	6 M 18 x 1.5
	HF70095	70	6000	7000	5000	4600	5500	3700	3000	1800	6 M 18 x 1.5
	HF70096	70	6800	8100	5500	5800	6900	4700	4000	2300	6 M 18 x 1.5
	HF70097	70	6800	8100	5500	5800	6900	4700	4000	2300	6 M 18 x 1.5
	HF70098	70	6800	8100	5500	5800	6900	4700	4000	2300	6 M 18 x 1.5
	HF70099	80	9000	10800	8000	7500	9000	6700	4000	2300	8 M 18 x 1.5
	HF70100	80	9000	10800	8000	7500	9000	6700	4000	2300	8 M 18 x 1.5
	HF70101	90	9000	10800	8000	7500	9000	6700	4000	2300	8 M 18 x 1.5
	HF70102	90	10000	12000	9000	9000	10500	8000	4000	4000	8 M 20 x 1.5
	HF70103	100	12500	15000	11000	11000	12500	9500	4000	4000	8 M 22 x 1.5

Brake axles with reversing drive

non original parts	Order no.	Square*	Axle load (kg) 25km/h			Axle load (kg) 40km/h			Brake load per kg		Bolt NC
* for high speed / ADR			2axle	1axle	2tandem	2axle	1axle	2tandem	25km/h	40km/h	
	HF70104	100	11000	12500	9500	9000	10000	7500	6900	4500	10 M 22 x 1.5
	HF70105	100	11000	12500	9500	9000	10000	7500	6900	4500	8 M 20 x 1.5
	HF70106	100	11000	12500	9500	9000	10000	7500	6900	4500	10 M 22 x 1.5
	HF70107	100	11000	12500	9500	9000	10000	7500	6900	4500	8 M 20 x 1.5
	HF70108	100	11000	12500	9500	9000	10000	7500	6900	4500	10 M 22 x 1.5
	HF70109	110	11000	12500	9500	9000	10000	7500	6900	4500	10 M 22 x 1.5
	HF70110	110	11000	12500	9500	9000	10000	7500	6900	4500	10 M 22 x 1.5

The listed spare parts are not original replacement parts. The original part-numbers (OEM) in this catalogue serve only to comparing purposes.

Brake axles with reversing drive

Hub F	Bolt circle B	Wheel brake*	Track*SP	Offset*	Brake compensator	non original parts
				* (mm)		* ADR
67	67	250 x 40	1500	-	centre	
67	67	250 x 40	1700	40	centre	
161	161	300 x 60	1700	-	centre	
161	161	300 x 60	2150	-	300 left	
161	161	300 x 60	2230	-	200 left	
161	161	300 x 90	1700	-	200 left	
161	161	300 x 90	1700	-	centre	
161	161	300 x 90	1900	-	centre	
221	221	300 x 90	1800	-	200 left	
221	221	300 x 90	1900	-	200 left	
221	221	300 x 90	1900	-	200 left	
221	221	400 x 80	1900	-	200 left	
280	280	400 x 80	1900	-	200 left	

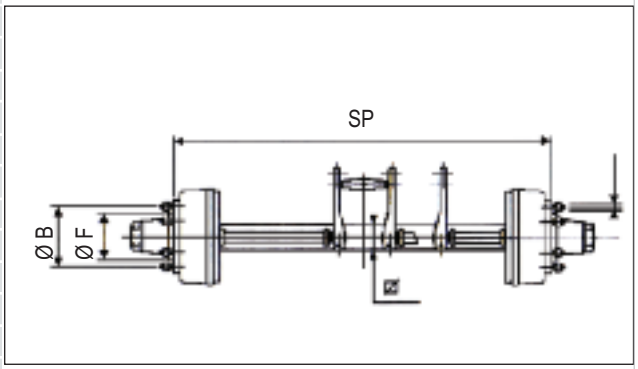

Brake axles with reversing drive

Hub F	Bolt circle B	Wheel brake*	Track*SP	Distance*	Slack adjuster	non original parts
				* (mm)		* for high speed / ADR
280	335	406 x 120	1900	350	non-automatic	
220	275	406 x 120	2000	1450	non-automatic	
280	335	406 x 120	2000	850	non-automatic	
220	275	406 x 120	2020	1350	non-automatic	
280	335	406 x 120	2200	200	non-automatic	
280	335	406 x 120	1800	350	non-automatic	
280	335	406 x 120	2000	350	non-automatic	

hansafrique

Hansafrique Trading Company (Pty) Ltd

For Your Order

qty	article number	article description	single price		total price	
				ZAR		ZAR
				ZAR		ZAR
				ZAR		ZAR
				ZAR		ZAR
				ZAR		ZAR
				ZAR		ZAR
				ZAR		ZAR
				ZAR		ZAR
				ZAR		ZAR
				ZAR		ZAR
				ZAR		ZAR
				ZAR		ZAR
				ZAR		ZAR
				ZAR		ZAR
				ZAR		ZAR
				+ VAT		ZAR
				+ Delivery		ZAR
				Total		ZAR

notes

company

country

surname, forename

telephone

address

fax

postcode, city

e-mail

place, date

signature

General Sales Conditions of Trade

General Sales Conditions of Trade by NB PARTS GmbH
Daimlerstrasse 7, D-91301 Forchheim, Germany,
version dated 01.01.2008

§ 1 General

(1) All supplies and services are governed exclusively by the following terms and conditions of sale and supply; these are applicable only in respect of business entities pursuant to § 310 Para. 1 and § 14 of the German Civil Code.
These terms and conditions shall also apply to all future business relationships without the need for express reiteration.
(2) Conditions of the customer divergent from our terms and conditions and not expressly recognised by us are non-binding, even if we do not expressly contest them.
(3) These terms and conditions of trade are included and should be interpreted exclusively in accordance with the law of the Federal Republic of Germany, as should the conclusion and interpretation of any legal transactions with the customer.

§ 2 Offers, scope of services and contract conclusion

(1) Our contract offers are non-binding and subject to change.
(2) Any services owed under the contract shall be determined solely by our order confirmation. The qualities specified therein comprehensively and conclusively determine the features of the delivery item. Public statements made by our suppliers, the manufacturers and their subsidiaries or third parties shall contain no delivery item features that change or supplement this specification of qualities.
3) Modifications to the style, design and colour as well as the scope of supply on the part of the manufacturer during the period of supply are permitted, provided these changes take reasonable account of the interests of the customer.
(4) Partial deliveries are permissible, provided this is reasonable for the customer.
(5) Documents on which the offer or order confirmation is based, such as illustrations, drawings, indications of dimensions and weight, are as a rule only to be seen as approximate values, unless they are expressly declared as binding.

§ 3 Prices and payment terms

(1) Our prices are ex-works and exclude any applicable VAT, package and posting and other transport costs.
(2) Should more than 4 months elapse between contract conclusion and delivery, whereby we are not accountable for any delay in delivery, we are entitled to increase the price to reflect any material costs, wage expenditure and other additional expenses incurred for our account. Should the purchase price be increased by more than 40%, the customer is entitled to withdraw from the contract.
(3) Payment of the invoice amount is due upon handover of the delivery item or upon transmission of invoice, at the latest, however, within 30 days from receipt of invoice. For goods deliveries, we offer a 2% discount if payment is made within 14 days from delivery and date of issue of invoice.
(4) If the payment term is intentionally exceeded, we will calculate late payment interest at 8% above the base interest rate valid at the time whilst reserving the right to raise further claims. The same shall apply in the event we defer payment.
(5) Offsetting and retention are excluded unless the request to offset is undisputed or legally established.

§ 4 Delivery and performance period, liability upon default

(1) Delivery deadlines or periods that have not been expressly deemed binding in writing are solely for information purposes and are not binding. The delivery period commences upon contract conclusion and starts to run at the earliest, however, once the customer has duly fulfilled its duties to cooperate. Should contract amendments be agreed after contract conclusion, then the delivery period must also be rearranged accordingly.
(2) Should business disruptions arise due to industrial action (in particular strikes and lock-outs) or due to unforeseen impediments beyond our control, e.g. delayed delivery from our supplier, traffic or business disruptions, lack of materials or power, etc., then the agreed delivery period shall be extended by the duration of the performance default caused by these circumstances.
(3) Deliveries are subject to correct and prompt supplies being made to us. We shall inform the customer immediately in the case of non-availability of the delivery item and in the event of withdrawal from contract, we will immediately refund any advance payments received.
(4)Should any non-binding delivery period/deadline be exceeded, the customer may, after allowing a 3-week period of grace, provide us with a written demand for delivery. We may be deemed in delay only after this period has expired. Should any binding delivery period/deadline be exceeded, we will be deemed in delay as soon as this delivery period/deadline is exceeded, unless we are not responsible for the delay. The customer's rights in the event of such delay are conclusively regulated in (5).
(5) Claims for compensation as a result of lateness are excluded if there is only minor fault on our part and if there is no breach of essential contractual obligations. In all other respects, we are liable towards the customer in the event of delivery delays in accordance with the legal regulations. If the delay results from gross negligence whereby a fault of our legal representative or vicarious agent is attributable to us, our liability is limited to typical, foreseeable damages. In all other respects, where we are liable due to delay, our liability for compensation in addition to performance is limited to 5% and for compensation instead of performance to 20% of the value of the delivery/service. These limits are not applicable in the event of liability due to injury to life, body or health.

§ 5 Transfer of risk

Risk is transferred to the customer as soon as we have made the goods available for the customer and have notified the customer to this effect. The customer is obliged to accept the goods within a period of 8 days, unless the customer is entitled to decline to accept the goods due to significant defect.

§ 6 Retention of title

(1) We retain title to the goods supplied until payment has been made in full. This retention of title also applies until all claims, including future and conditional claims, arising from the business relationship with the customer have been fulfilled.
(2) The customer is not authorised to transfer the goods by way of security or to pledge the goods as collateral, although the customer is entitled to resell the reserved goods in the normal course of business. The customer hereby assigns to us all claims arising from any such resale.
(3) If the customer processes the goods, the retention of title also extends to the entire new item. The customer acquires a co-ownership share corresponding to the ratio of the value of its goods to the value of the goods supplied by us.
(4) If the value of all existing securities assigned to us exceeds our existing claims by more than 10% in the long term, then we shall release the securities at our discretion upon the customer's request.
(5) We are entitled to exercise our rights to retention of title without withdrawing from the contract. This applies in particular if the customer is in delay with payment, whereby we are entitled to reclaim the reserved goods without setting a deadline.

§ 7 Claims for defects

(1) If a commercial transaction exists for both parties, then the customer is obliged to inspect the goods immediately upon receipt, to the extent that this is feasible in the normal course of business, and if a defect is discovered, the customer is obliged to notify us without delay. If the customer omits to give such notification, then it shall be deemed that the goods have been accepted, unless the defect were such that it could not be detected upon inspection. In all other respects, §§ 377 ff. of the German Commercial Code apply.
(2) Claims for defects are excluded in the case of only slight deviation from the agreed quality and in the case of only slight impairment of serviceability.
(3) Customer claims for defects are limited to subsequent performance. The customer must allow us an appropriate amount of time to effect the subsequent performance. We may elect to effect subsequent performance through rectification of defect or substitute delivery. Should subsequent performance be unsuccessful, the customer has the right to either a reduced price or withdrawal from the contract. In any case, subsequent performance is not deemed unsuccessful until after the second failed attempt.
(4) Further claims by the customer are excluded, unless they result from acceptance of a guarantee. This does not apply in the case of malice, gross negligence or breach of fundamental contractual obligations by us.
(5) The customer's recourse claims in accordance with § 478 of the German Civil Code exist only insofar as the customer has not made any agreements with its subpurchaser beyond the legal claims for defects.

§ 8 Liability

(1) If, according to legal provisions, we are liable for damage caused by minor negligence, then our liability is limited, unless caused by injury to life, body or health. Liability exists only in the case of breach of fundamental contractual obligations and is limited to typical damages foreseeable at the time of contract conclusion.
(2) If we or our representatives or vicarious agents are responsible for malice or gross negligence, we will be liable in accordance with the legal provisions. In cases of gross negligence, however, our liability is limited to typical damages foreseeable at the time of contract conclusion, except in the case of injury to life, body or health.
(3) In all other respects, our liability is limited to damages due to impossibility of performance and to reimbursement of wasted expenses up to a total of 20% of the value of the delivery/service. Further claims are excluded
(4) This does not affect our liability in the case of fraudulent concealment of a defect resulting from acceptance of a guarantee or exercise risk and in accordance with product liability law.
(5) The above exclusions and restrictions on our liability also apply to the personal liability of our legal representatives and vicarious agents.

§ 9 Statute of limitations

(1) The period of limitation for claims and entitlements due to defects, on whatever legal grounds, is 1 year. The also applies to recourse actions in accordance with § 479 of the German Civil Code.
(2) The period of limitation specified in (1) also applies to all customer claims for damages related to a defect, whatever the legal basis of the claim.
(3) The period of limitation specified in (1) and (2) does not generally apply in cases of malice, fraudulent concealment of a defect, acceptance of guarantee, injury to life, body or health, claims made in accordance with the product liability law, gross negligence or breach of fundamental contractual obligations.

§ 10 Obligation, place of performance, place of jurisdiction

(1) Should any individual provision of this contract, or any of its components, be ineffective, this shall not affect the effectiveness of the remaining
provisions. The contract partners have a duty, in the context of being reasonable and acting in good faith, to replace the ineffective provision with an effective provision that best approximates the economic purpose of the ineffective provision, provided this does not cause any substantial change to the subject terms of the contract; the same applies where a circumstance that requires legal regulation has not been expressly regulated.
(2) The place of performance for all obligations arising directly or indirectly from this contractual relationship, including duty of payment, is our company headquarters. The place of jurisdiction is likewise our company headquarters. We are, however, also entitled to bring a claim before a court that has jurisdiction for the headquarters or a subsidiary of the customer.

Register number: HRB 6248
Register court: Bamberg District Court
VAT reg. no.: DE 263 015 356

Misprint, errors and subject to change without notice excepted. Edition: 04/2018
NB PARTS GmbH do not grant full accuracy in product description and arrangement of the information. This catalogue was compiled in collaboration with our manufacturers and suppliers. The visual presentation of articles offers a better understanding and is not binding. The listed spare parts are not original replacement parts, nevertheless we provide trademark products in first party quality. The original spare part-numbers (OEM) in this catalogue serve only to comparing purposes.
Delivery based on General Sales Conditions GSC, dated 01.01.2008. All rights reserved.
© Copyright 2018 Hansafrique Trading Company (Pty) Ldt South Africa and NB PARTS GmbH Germany

hansafrique

Est. 1972

Hansafrique Trading Company (Pty) Ltd

NB PARTS®
Brake Components

Contact us today!

Tel: +27(0) 12 804 1287 I Tel: +27(0) 12 804 3113

Brainley No 6 Unit 2, 123 Mosaic Street, Silvertondale, 0184
Postnet Suite 335, Private Bag X 10, Elardus Park, 0047

www.hansafrique.co.za