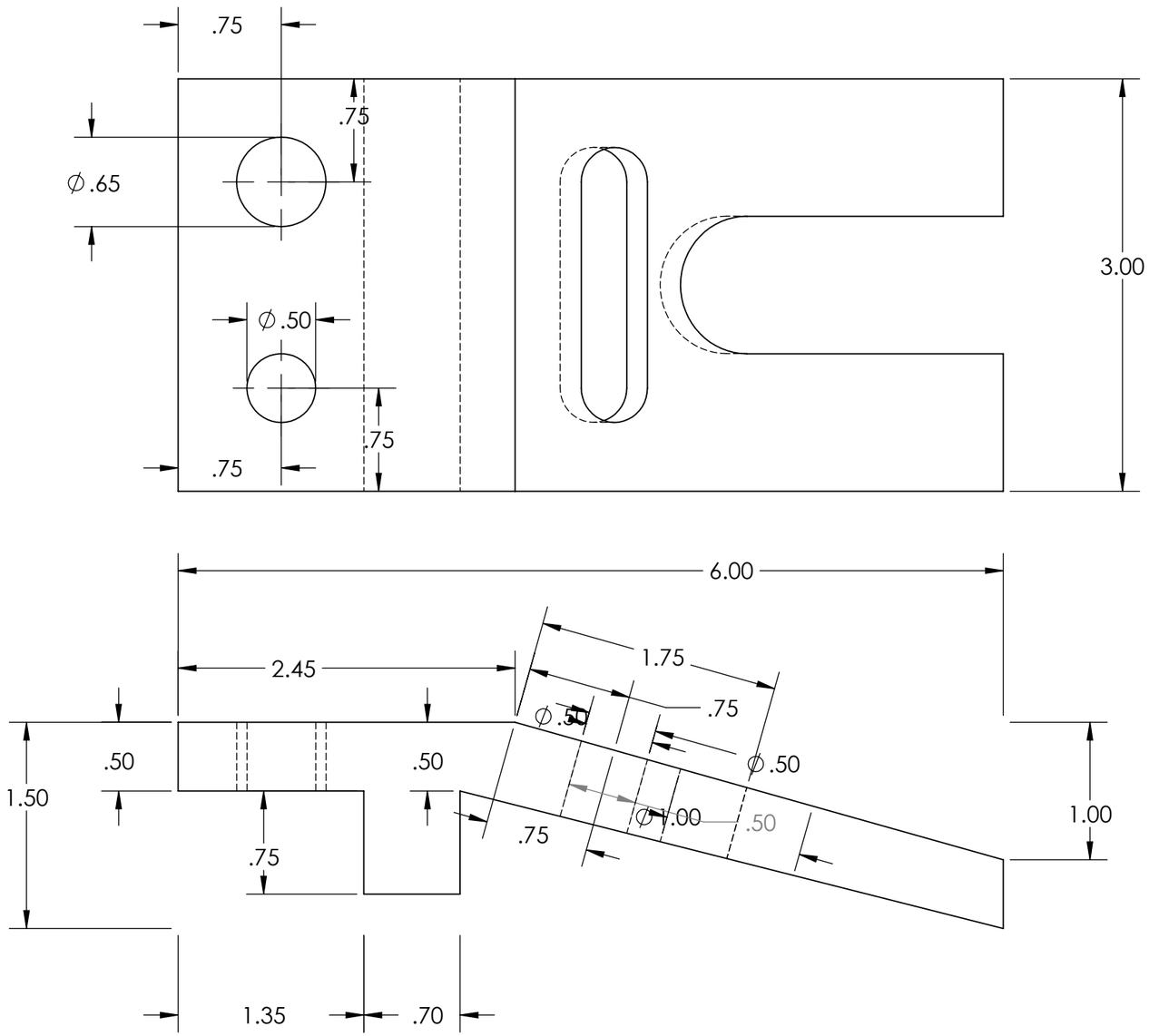

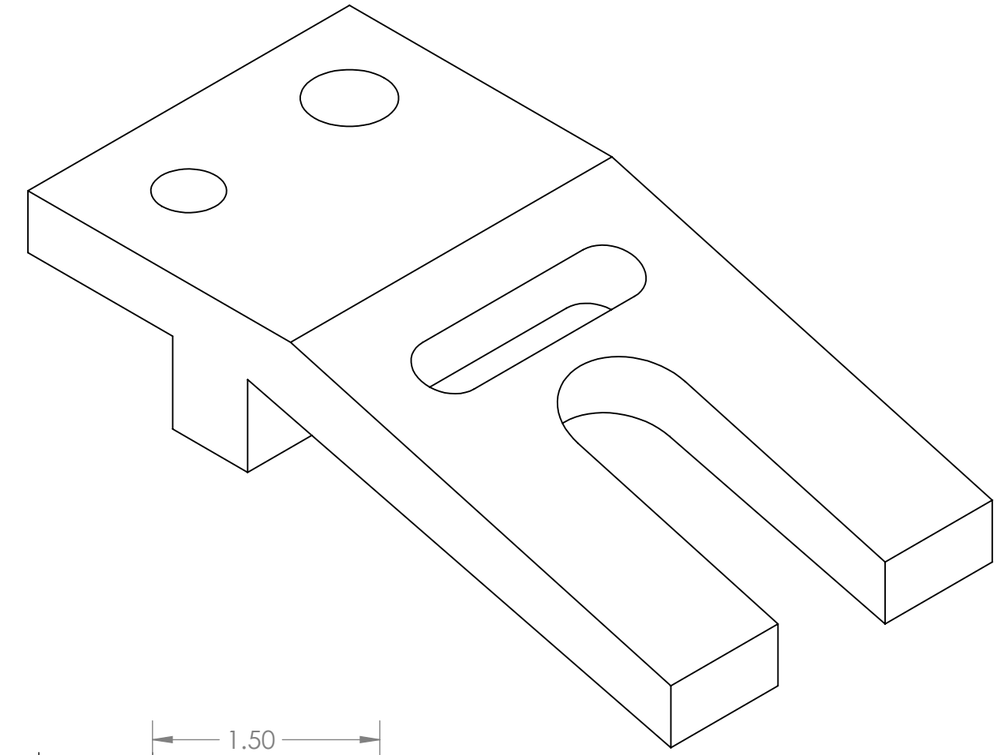

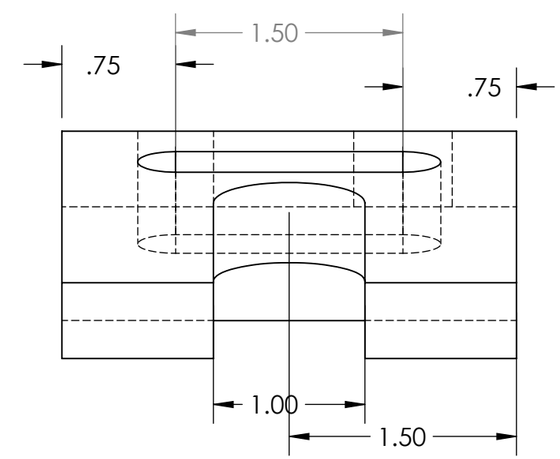

UNLESS OTHERWISE SPECIFIED:		NAME	DATE	UCONN
DIMENSIONS ARE IN INCHES TOLERANCES: FRACTIONAL ± ANGULAR: MACH ±0.1 BEND ± TWO PLACE DECIMAL ±0.01 THREE PLACE DECIMAL ±0.003	DRAWN	Cayo, K	06/19/22	TITLE:
	CHECKED			INCLINED LIFT
	ENG APPR.			
	MFG APPR.			
INTERPRET GEOMETRIC TOLERANCING PER:	Q.A.			
MATERIAL 1060 ALLOY	COMMENTS:			SIZE B / DWG. NO. M3-Exercise4 / REV
FINISH				
DO NOT SCALE DRAWING				SCALE: 1:2 / WEIGHT: / SHEET 1 OF 1