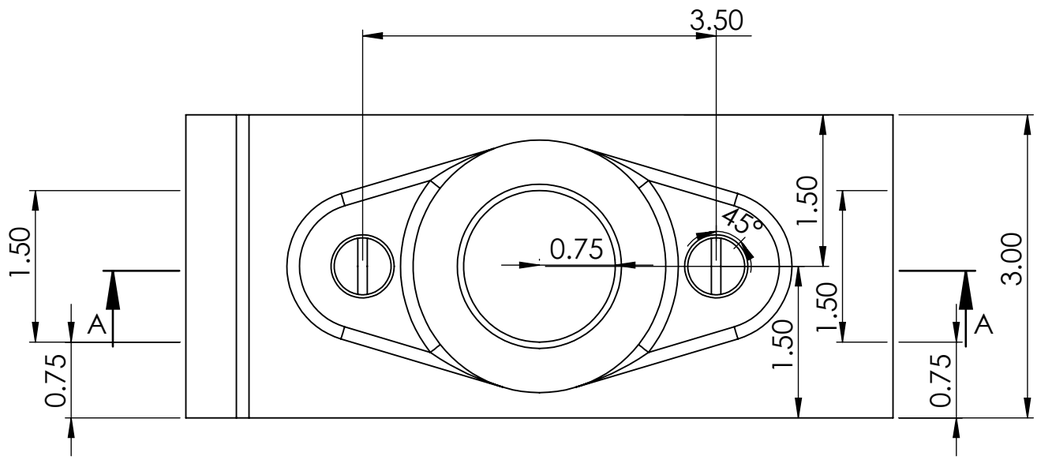

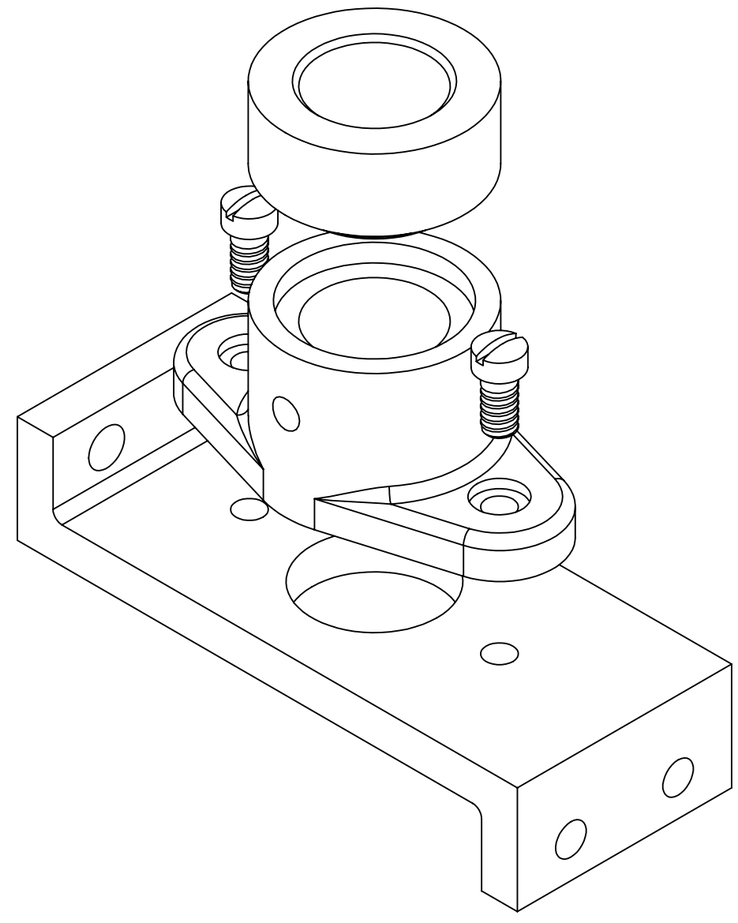

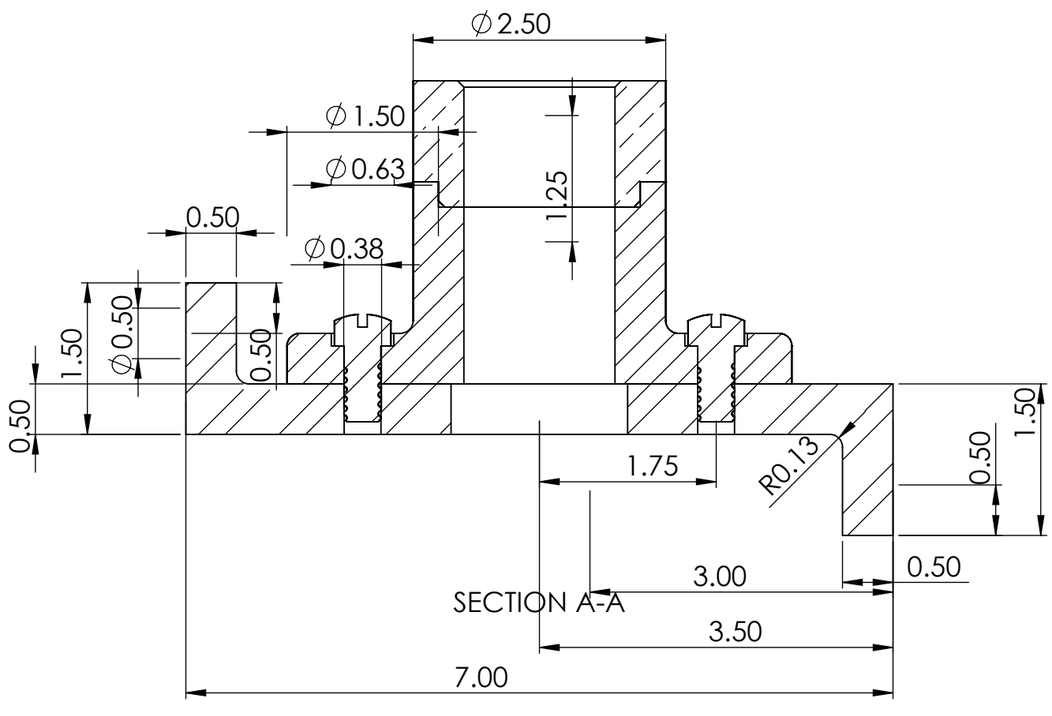

UNLESS OTHERWISE SPECIFIED:		NAME	DATE	UCONN
DIMENSIONS ARE IN INCHES TOLERANCES: ANGULAR: MACH ±0.1° BEND ± TWO PLACE DECIMAL ±0.01 THREE PLACE DECIMAL ±0.003	DRAWN	Cayo, K	07/03/22	TITLE: SHAFT SUPPORT ASSEMBLY
	CHECKED			
	ENG APPR.			
	MFG APPR.			
INTERPRET GEOMETRIC TOLERANCING PER:	Q.A.			
MATERIAL	COMMENTS:			SIZE B / DWG. NO. M5-Assembly / REV
FINISH				
DO NOT SCALE DRAWING				SCALE: 1:1.5 / WEIGHT: / SHEET 1 OF 1