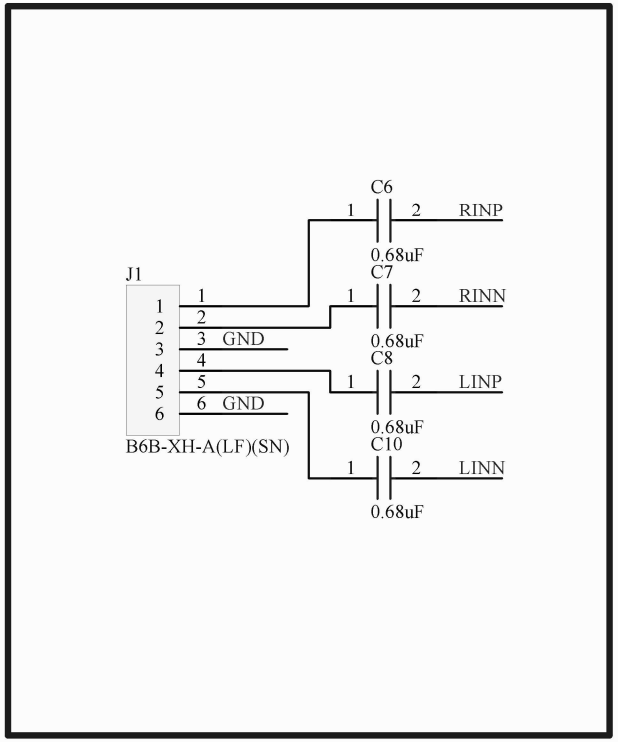

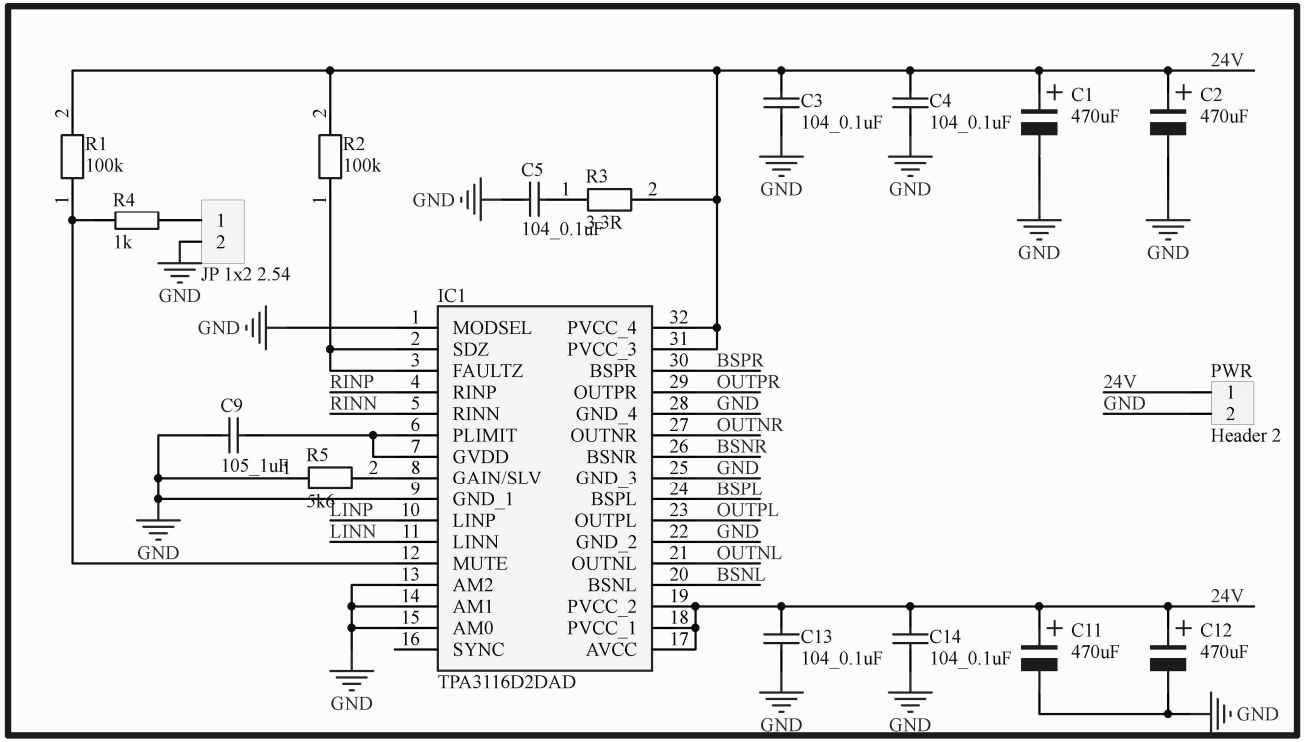

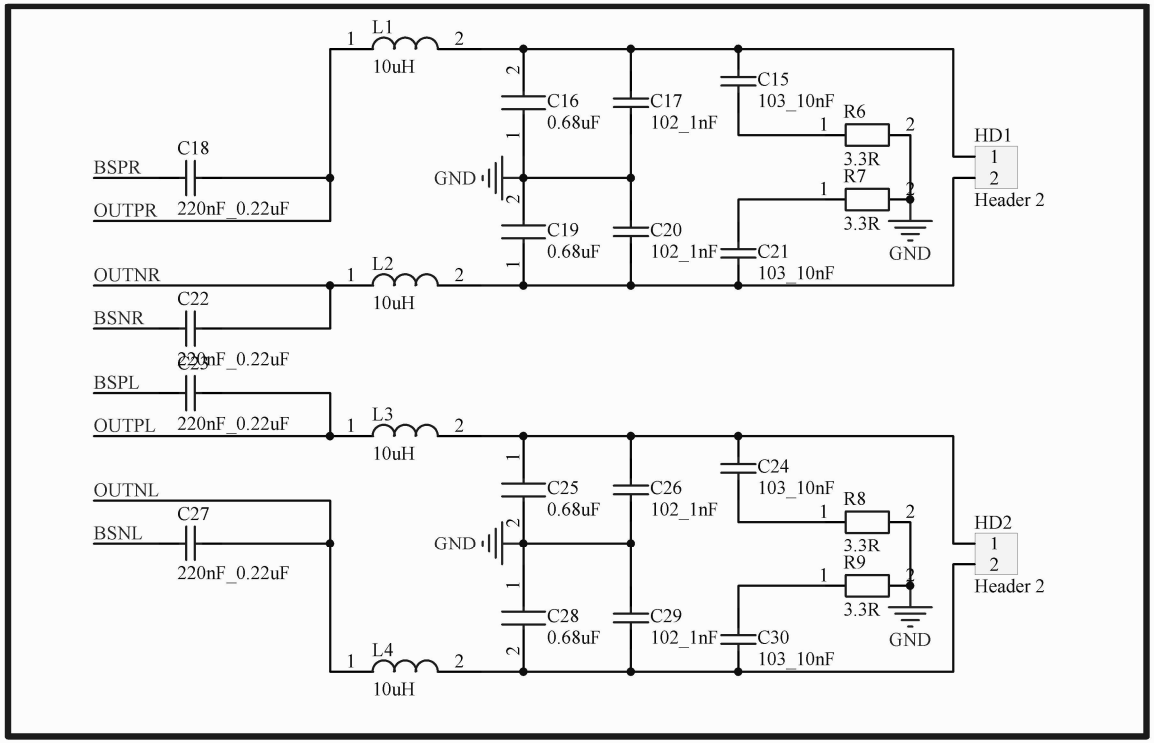

Title		
Size A	Number	Revision
Date: 10/3/2024	Sheet of	
File: E:\Git\..\Sch_TPA3116.SchDoc	Drawn By:	