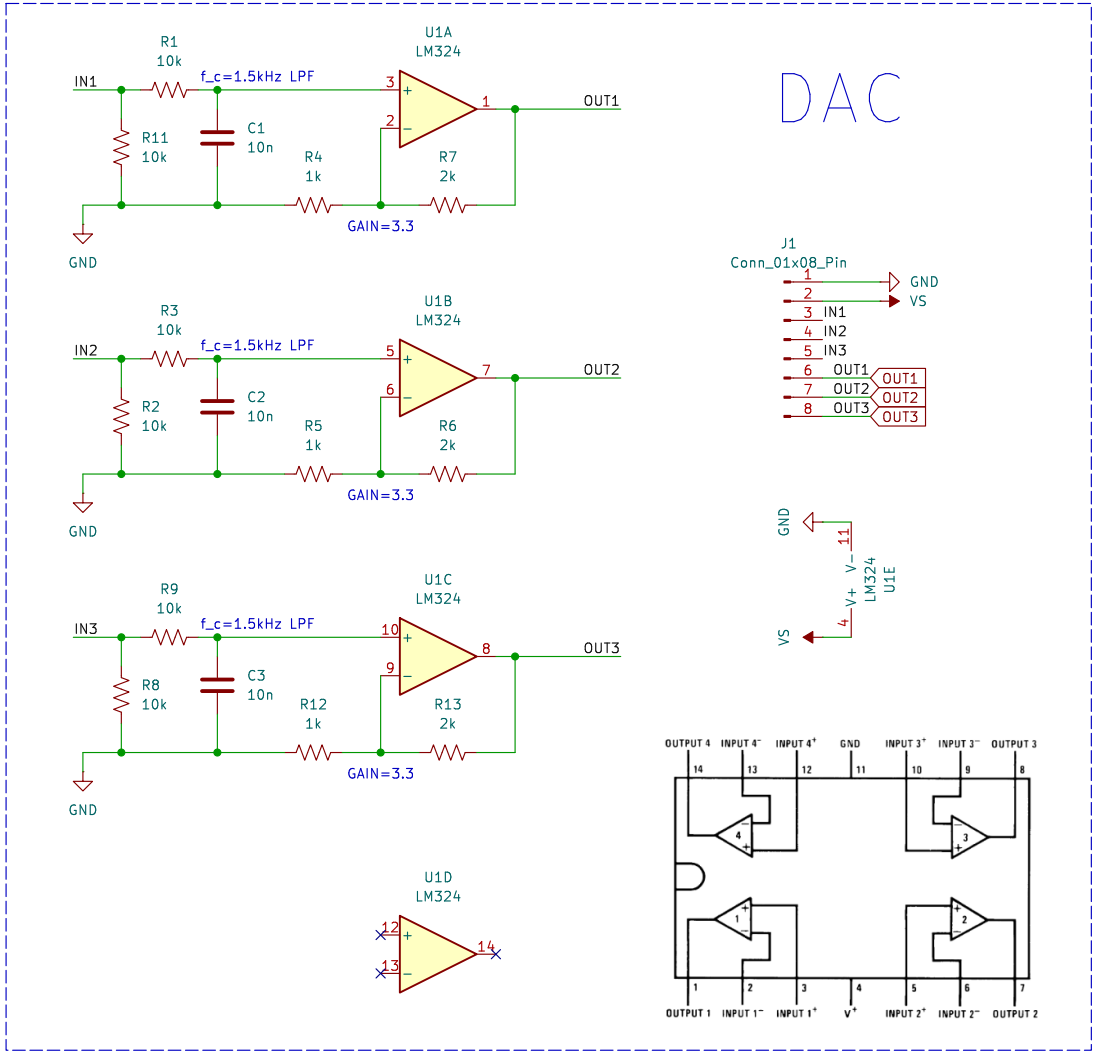

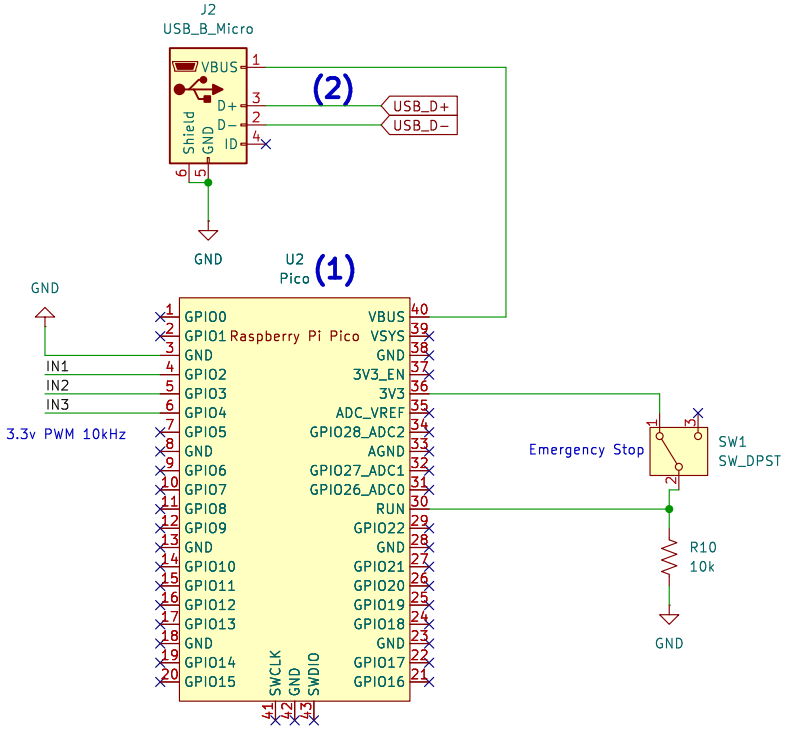

(2) extended with 3m cable with USB-A male connector, exposed as USB CDC device
(1) raspberry pi pico w is used

Sheet: /
File: glove_electronics.kicad_sch

Title: pneumatic glove

Size: A4	Date: 2024-09-19	Rev:
KiCad E.D.A. 8.0.5		Id: 1/1