ECE 415: MDR
DewBusters (Team 21)

University of Massachusetts Amherst

Meet the Team

Ritvik Verma

Software lead

CompE

Anush Rathod

Hardware lead

CompE

Maheer Daiyan

Budget and Logistics lead

EE

Akshat Rawal

PCB Lead

EE

Prof. Anderson

Team Advisor

Outline

1. Problem Statement (Updated)
2. Hardware and Software Diagrams
3. MDR Deliverables and Demo
3. Rovers Functionality and System Procedures for MDR
4. System Specifications
5. Budget Estimation
6. CDR Deliverables
7. Team Roles and GANTT Chart

Problem Statement

Problem Statement (Updated)

The presence of dew on sports fields is a pressing issue, posing risks to athlete safety and pitch quality. Stagnant dew heightens the likelihood of athlete injuries and encourages fungal growth, undermining the turf's condition. These challenges are amplified during the off-season due to the absence of natural dew dispersion from regular play. Current dew dispersal methods for now are manual labour and/or use of heavy machinery that are dependent on investment by the groundowners

But these methods are insufficient due to:

1. High labor intensity and inefficiency in manual removal techniques
2. Risk of damage as use of heavy machinery may harm the grass, especially when the turf is wet and more vulnerable to damage.
3. Inconsistency leading to uneven dew removal

Our Solution

Addressing the challenge of dew accumulation on athletic fields, our solution introduces a dual-rover system operating autonomously to clear dew with minimal manual intervention. This approach not only promises a reduction in labor but also aligns with cost-effective field maintenance. The rovers are designed to thoroughly cover the required area, mitigating human error and ensuring consistent ground coverage, making the dew dispersal process efficient.

Hardware and Software Diagram

Hardware Block Diagram

- The identification beacon refers to the object placed on the second rover for the camera module to detect for alignment

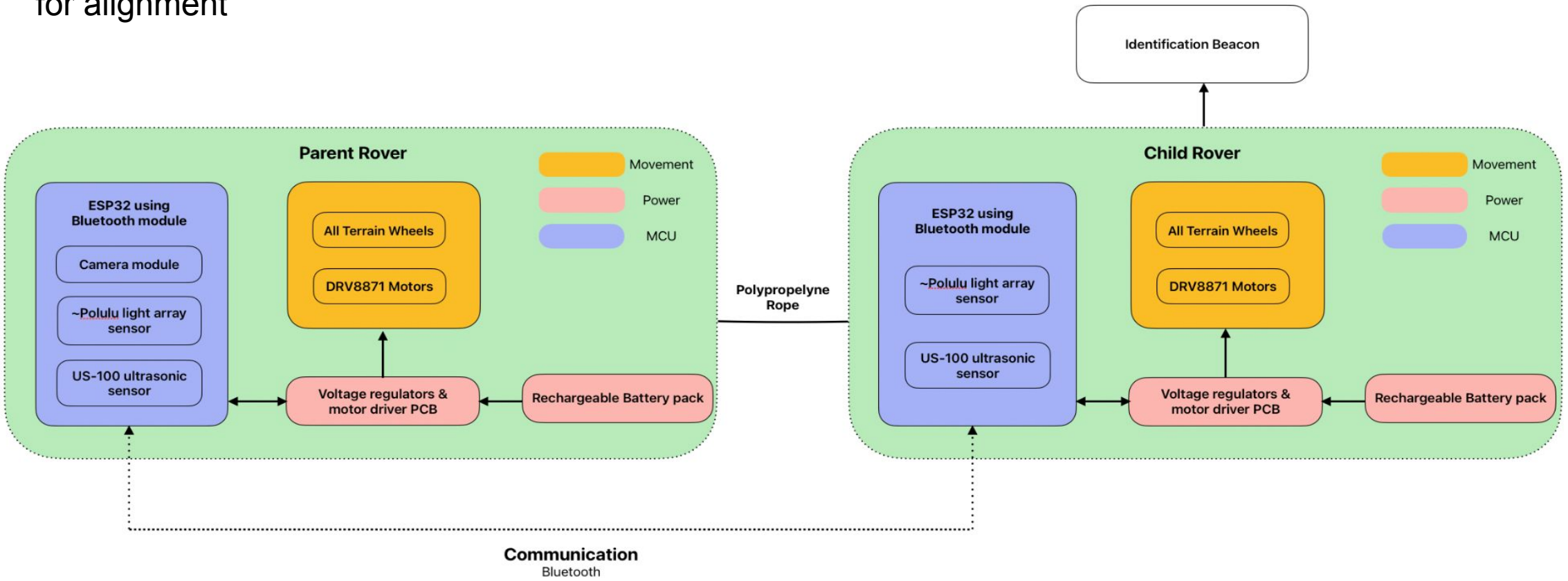

Software Block Diagram

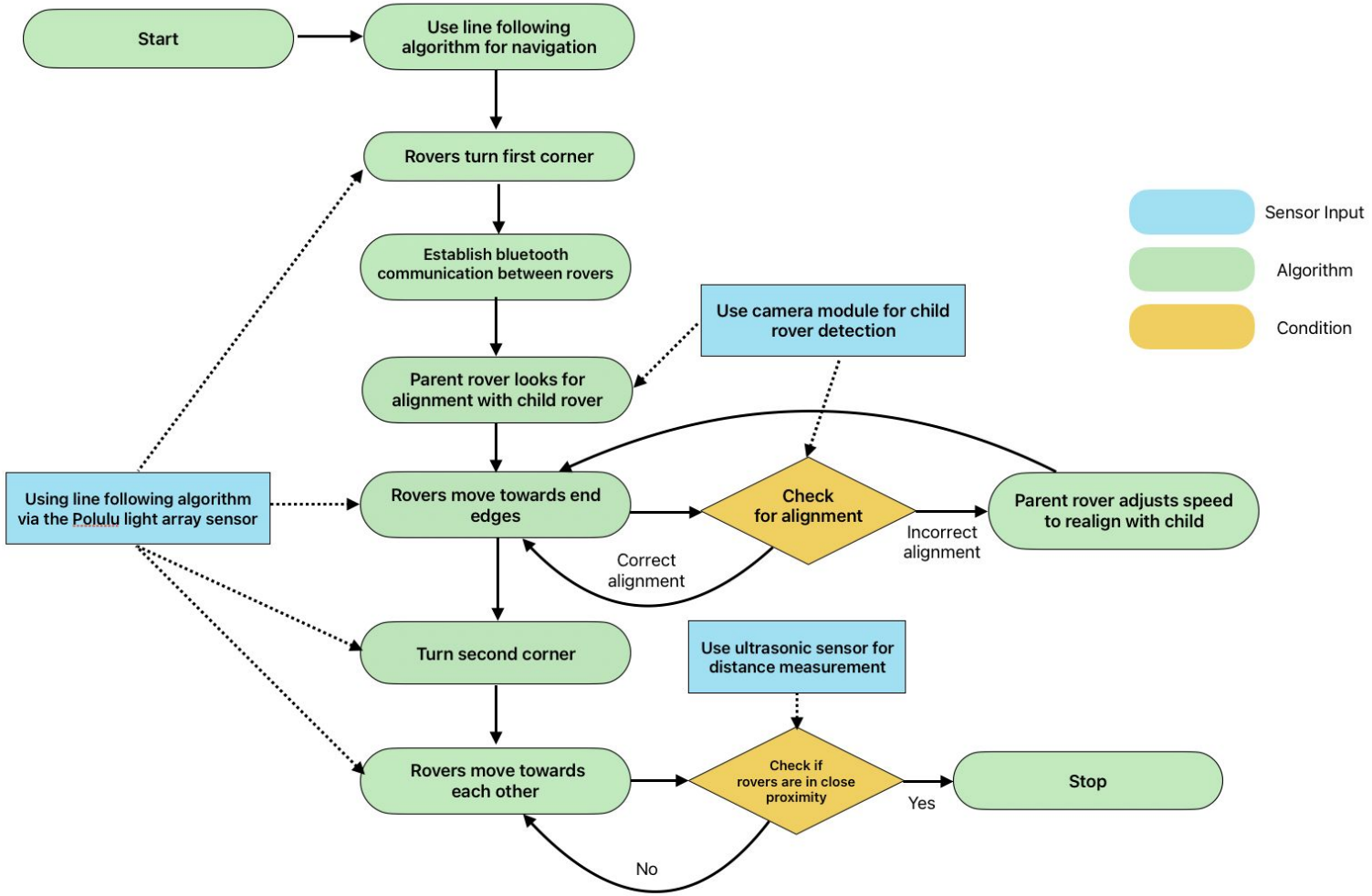

MDR Deliverables and Demo

MDR Deliverables

- Rover will be able to accurately execute line following algorithm
- Achieve variable speed on rovers
- Rovers will be able to communicate with each other
- PCB deliverable

PCB Plan

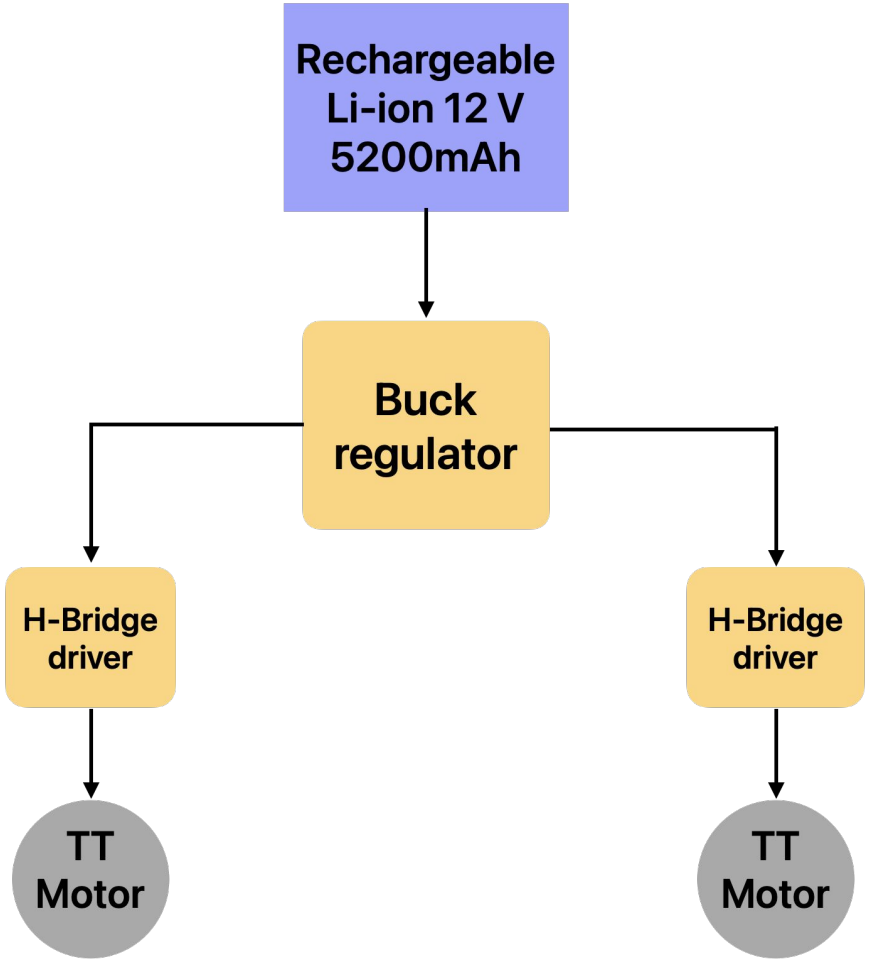

MDR Demo

Line Following - https://youtu.be/g9B53xBS8is

Bluetooth communication - https://youtube.com/shorts/wTJLOIFAEKg?feature=share

PCB Demo - https://youtube.com/shorts/FliyI7Q_AH0?feature=share

PCB Design for MDR

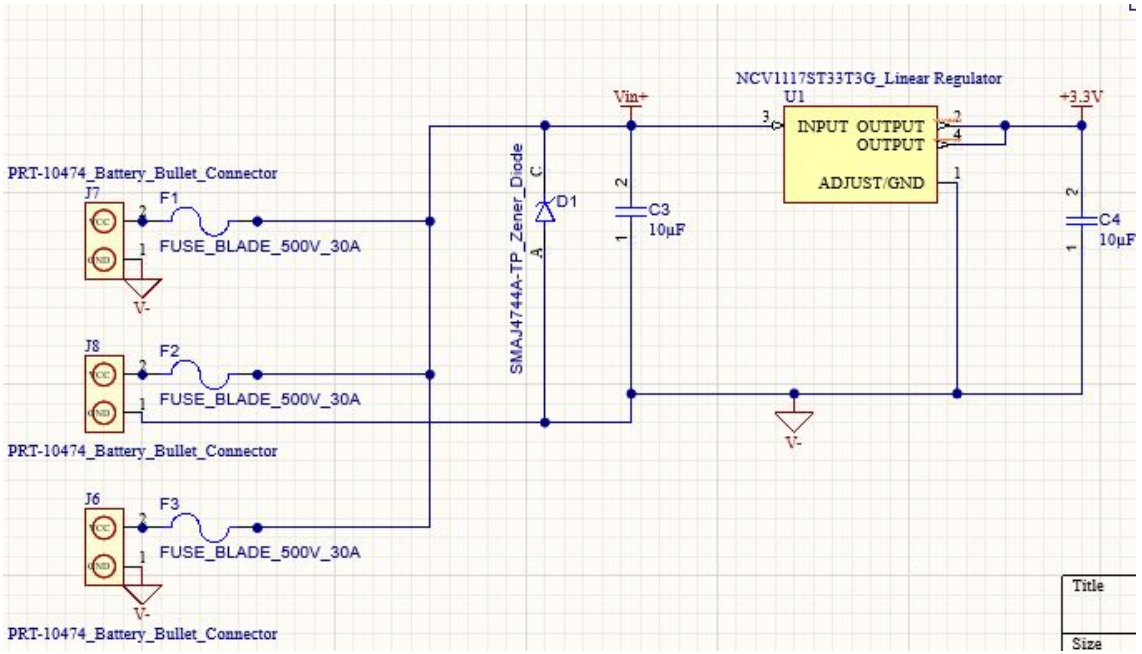

Power Schematic

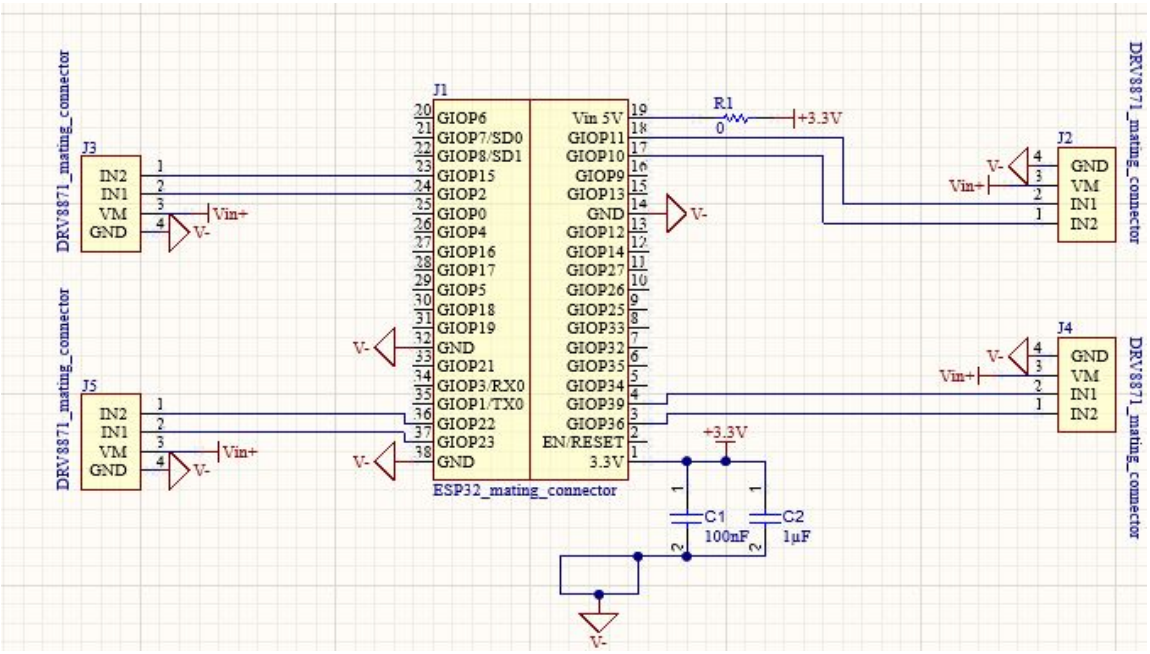

MCU Schematic

PCB Design for MDR

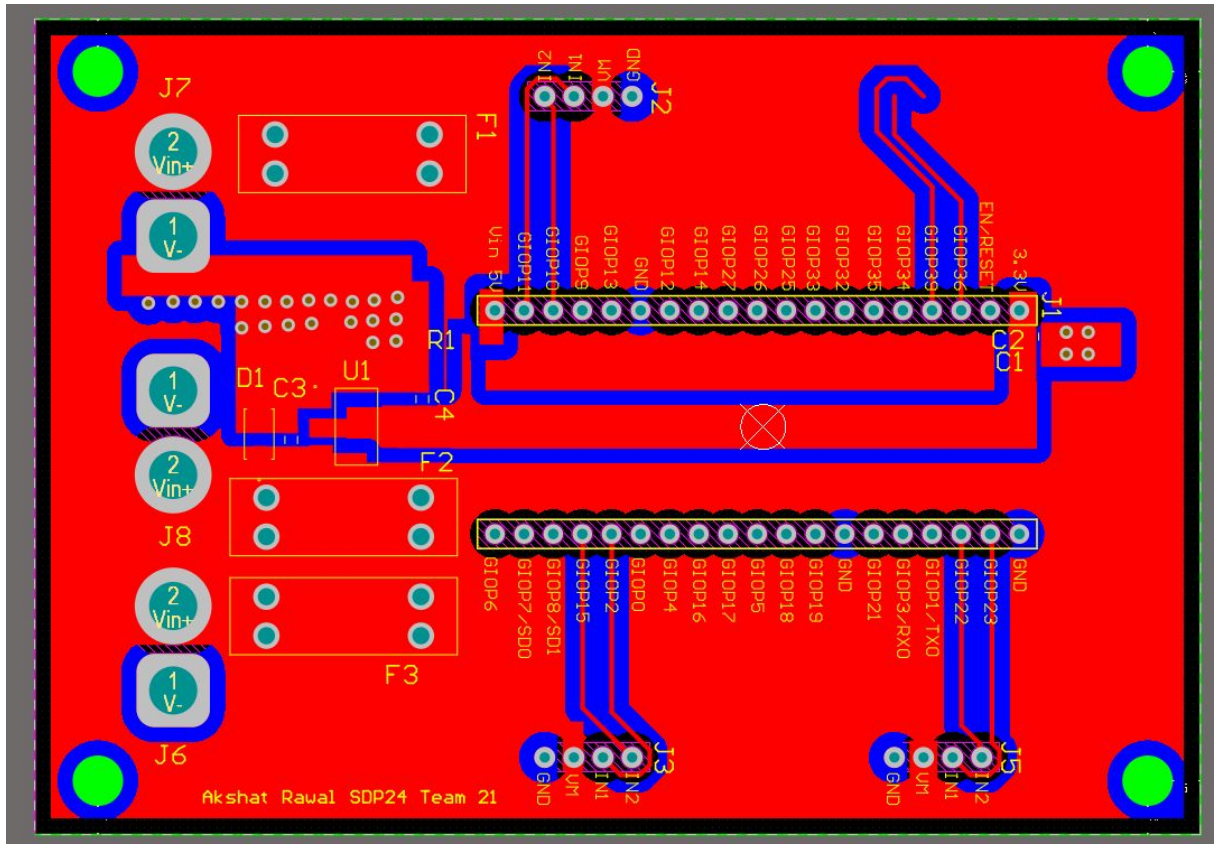

PCB Layout

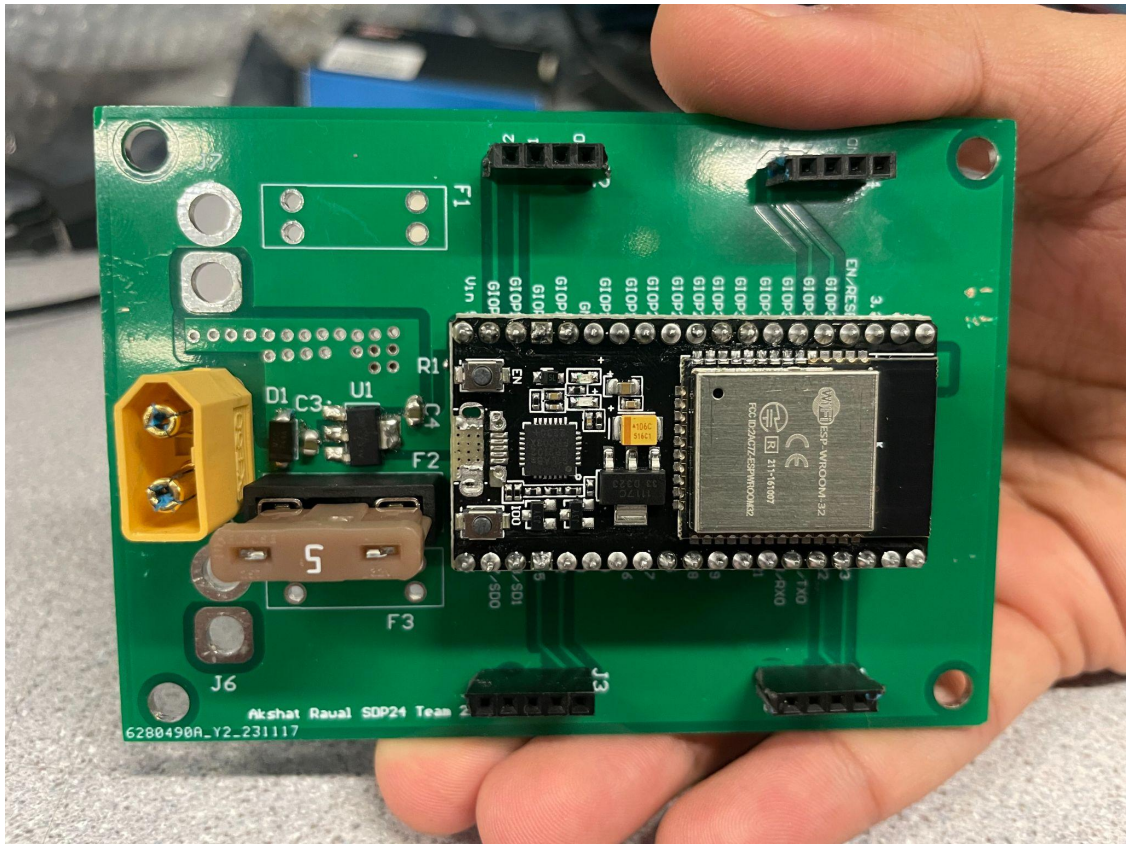

PCB Populated

PCB Demonstration (Populated and Tested)

- **Testing Measures**:
  - Soldered parts and checked for continuity
  - Applied power and checked for flashing ESP32

- **Components**
  - Electrical components: zener diode, voltage regulator resistor, capacitors
  - Battery components: XT60 connector and fuse
  - ESP32

Rover Functionality and System Procedures for MDR

Rover Movement

- **Using Gobilda Rover Chassis.**
  - Rover weight -11.5lbs
- **MCU used**
  - ESP32 Microcontroller
- **Drive Mechanics**
  - The rover is a 4WD system
  - 4 DRV8871 motors drivers on each rover
- **Moving forward all terrain wheels will be integrated in the system**

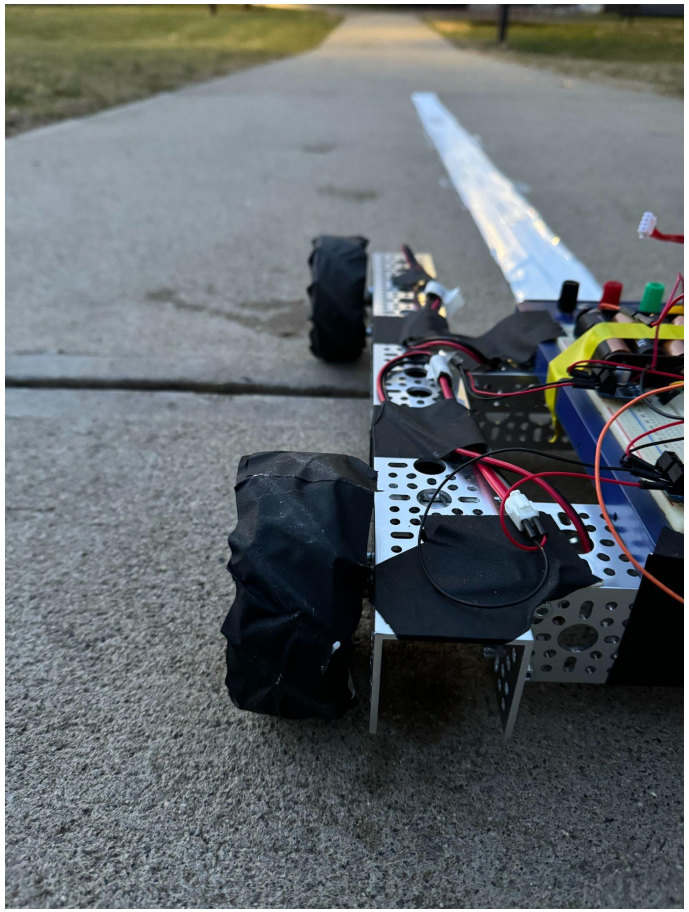

Current setup: Duct tape over Mecanum Wheels

Current Rover Design

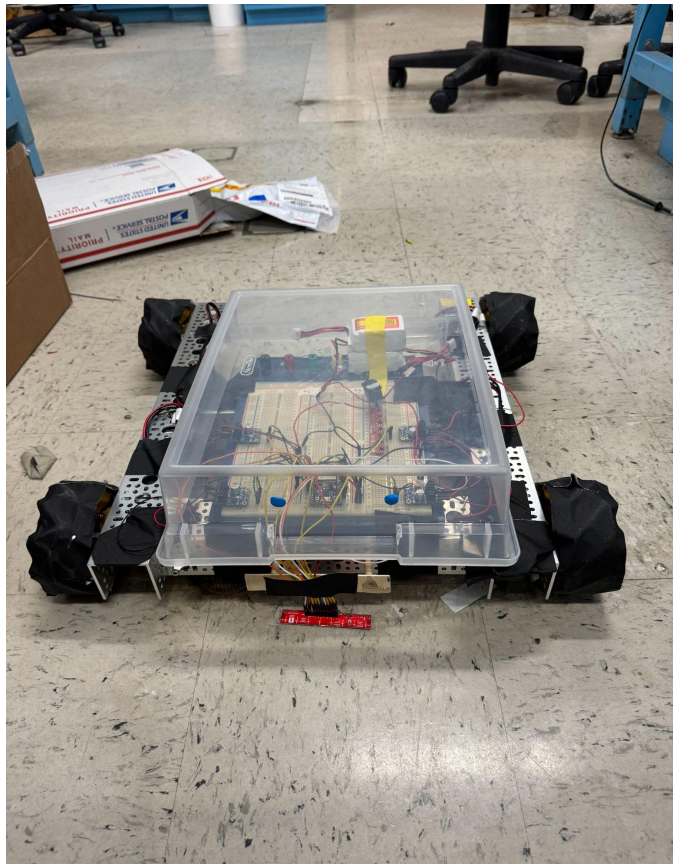

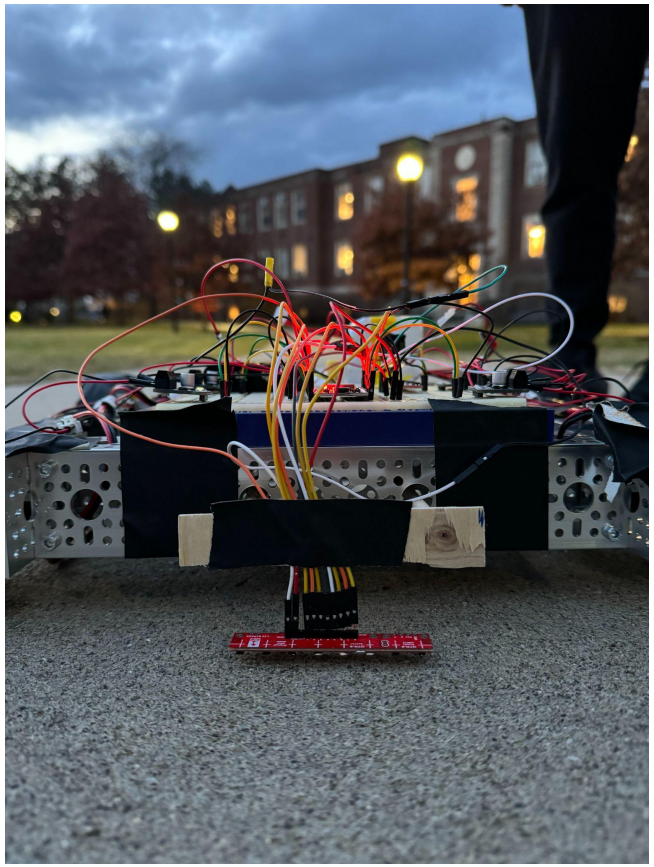

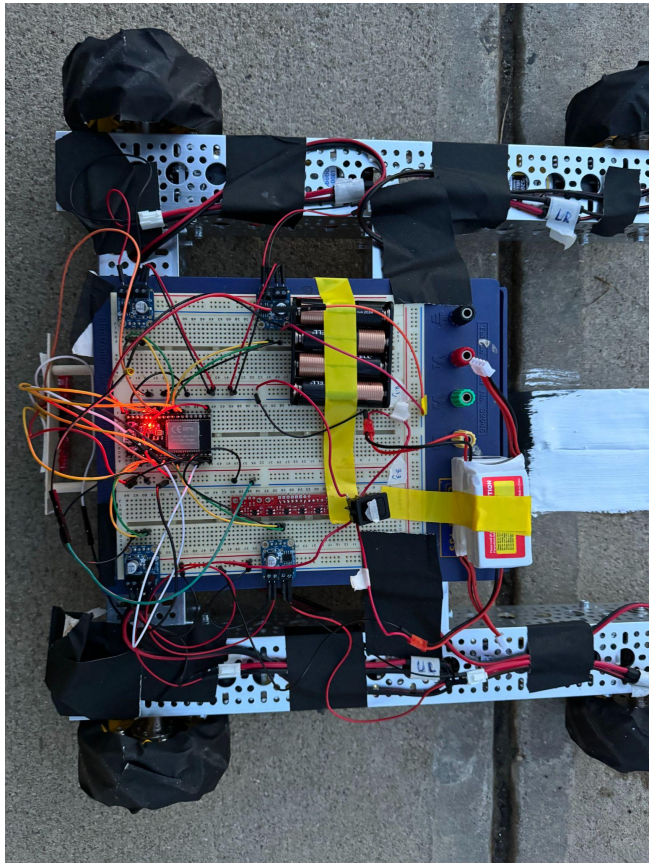

Navigation

- **Line Following Algorithm:**
  - Our rover employs a Pololu Reflectance Sensor for navigation, maintaining full exposure to the line for optimal detection. The system auto-corrects its course based on sensor feedback, ensuring it remains centrally aligned on the path.

- **Ground Conditions:**
  - Level ground (athletic field)
  - Grass length ~ 1-2 inch
  - Line width: 3-4 inch

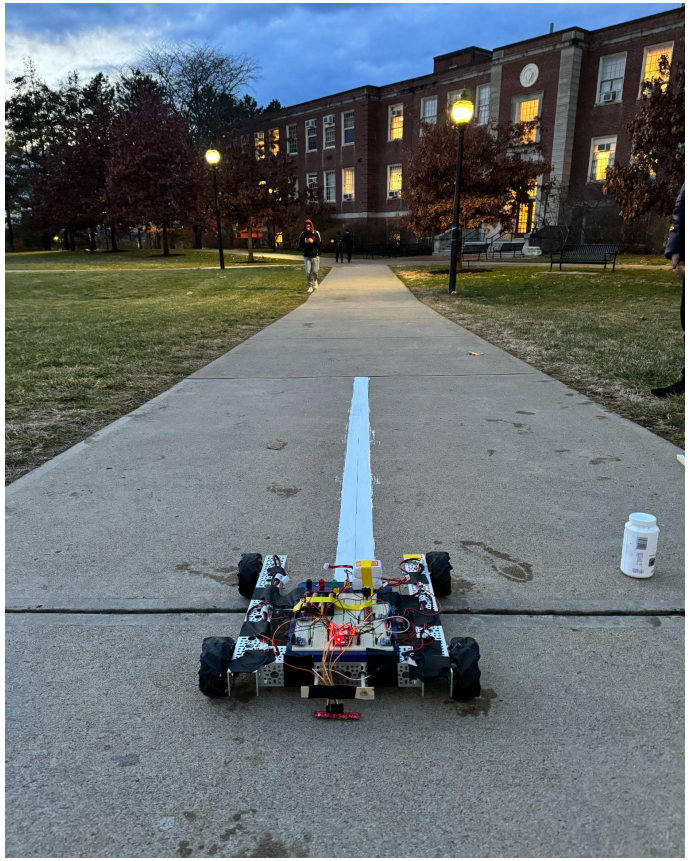

The line width was 3 inches
The length was 4 meters

Navigation Testing Plan

White Line Marking - Paint

	Concrete
Artificial indoor light	Attempts - 20 Success rate* - 60%
Outdoor Sunny	Attempts - 35 Success rate - 70%
Outdoor Overcast	Attempts - 35 Success rate - 80%

*Success rates indicate the percentage of times the rover was able to complete traversal of the entire line presented.

Communication

- **Rover Communication:**
  - Facilitate seamless bluetooth low energy communication between the ESP32 microcontrollers on both rovers.
  - Responsible for exchanging commands for rover movement
    - Encourages coordinated movement for both rovers to maintain parallel alignment
- **Test Plan:**
  - Data streaming between the two ESP32s with variable lengths between the devices
  - 95% connection success rate with data streaming between the devices within 0-10 metres
  - 90% connection success rate with data streaming between the devices for distances of 10+ metres

Cleaning Mechanism

- A fixed length rope suspended between the two rover
- Suspended rope forms an arc between the rovers for effective dew dispersal
- To be attached on the sides centrally of the rovers to prevent entanglement with wheels
- Polypropylene rope is water resistant and therefore it will only disperses dew
- Due to the weight of the rovers, the tension from the ropes should be minimal.
- Contingency: alternate rope attachment positions will be tested

Power Specification

Current consumption of each part:

Motors (4) : 2.5A each
ESP-32: 260mA
Voltage regulator: 1A
Polulu light sensor array: 100mA

Total required battery capacity = $2.5 \times 4 + (0.26 + 0.1 + 1)$
~ 12 Ah

For a runtime of half an hour,
Required battery capacity = 6 Ah

Power Specification Continued

Battery selection:

Turnigy Battery - 3 in parallel
Battery capacity (Total) = **6.6 Ah**
Volts (Total) = **12V**

Why 12V?
Optimal motor running voltage

Why 6.6Ah?
Runtime of 30 mins to cover 10*10 (m) field

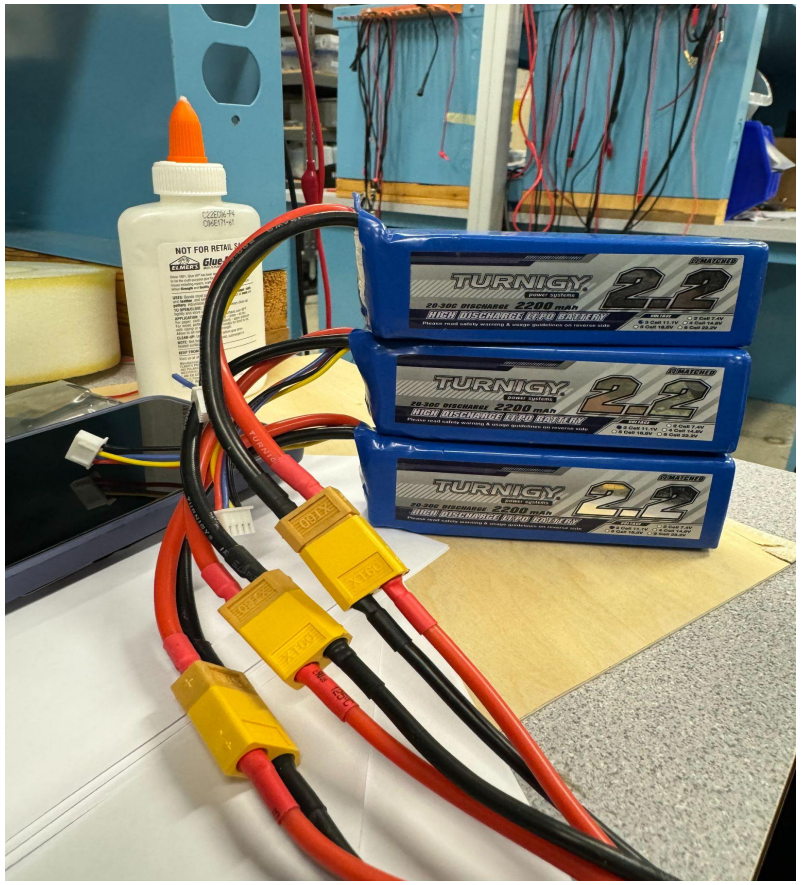

System Specifications

Spec Description (Revised)	Test Plan
Rovers are able to follow white line	Set rovers on straight white lines upto 100m long and test if rover can traverse different intensities of white lines. Record that its able to follow the entire white line 90% of the time.
The two rovers will establish a secure peer to peer connection	Verify and record successful acknowledgment message transfer and connection time between rovers and achieve communication error rate under 5%
Parent rover should be able to adjust to the position of child rover	Set rovers on varying vertical offsets of (+-) 5'', 10'' and verify that rovers are able to align by accelerating and decelerating
Rover should complete one traversal on a single charge	Test and record the distance travelled by the rovers on a single charge. Verify that battery has sufficient power for varying torque requirements of the motors by checking battery voltage level after each trial using an ammeter.
Camera module is able to identify rover on parallel end	Test accurate image recognition of child rover upto distances of 70m between the two rovers while keeping accuracy rate over 85% through numerous traversals.
Rovers will stop upon detecting each other in close proximity	Set rovers at varying distances facing each other to see if rovers stop within 12'' proximity between them to prevent collision
Effective dew cleaning will be achieved	Visual test - Test that the rope will be able to clean 90-95% of the area of the field
The suspended ropes will not entangle during the cleaning process	Run multiple traversals to verify ropes do not entangle during the cleaning process while maintaining the desired arc formation.
Monitor tension on rovers from rope (cleaning mechanism)	Run multiple traversals of rovers to analyze the effects of tension from rope. Use a tension gauge to monitor pull from the rope and change rope positioning accordingly.

Budget Estimation

Budget Approximation

Total spent = $308

Anticipated Cost = $76

Total spendings till CDR = $384

Contingency Fund After CDR = $ 116

Item	Quantity	Cost/unit ($)	Total Cost ($)
Motor driver	8	4	32
PCB	5	4.2	21
Chassis	2	500	Free
Polypropylene rope (50ft)	1	10	10
MCU ESP 32	4	13.5	54
Lithium ion battery	6	-	FREE (M5)
US 100 Ultrasonic sensor	2	11	22
Polulu Light sensor	2	12.5	25
All terrain wheels	8	14	114
Miscellaneous			30
Camera Module	2	10	20
All terrain wheels extender	8	7	56

CDR Deliverables

CDR Deliverables

- Achieve 90%+ Efficiency in Line Traversal: Target precise and controlled movement on an athletic field using paint. Error percentage indicates the number of times rover has halted or gone off course.
- Camera Module Integration for <15% Error Rate: Focus on image recognition with high accuracy. Error percentage indicates the number of times the camera module is unable to detect misalignment.
- Demonstrate Optimized Cleaning Mechanism: Implement a rope suspension system on the rover for smooth operation.
- Ensure System Robustness: Seamless integration and functionality of communication, line movement, and camera systems.
- Updated PCB

CDR DEMO

For our demo, we aim to show a video of both the rover traversing a 10X10m field on a single charge. We will individually showcase the line following

PCB Plan for CDR

- Correct MCU pin connection to motor drivers
- Master Button Integration
- Integrate PCB on rovers using through hole mount
- Start Early!

Team Roles and Gantt Chart

Team Roles and Responsibilities

Ritvik
- Team Manager
- Communication Between Rovers
- Camera Module Integration

Anush
- Sensors Integration
- Line Following Algorithm
- Speed Variation

Maheer
- Testing and System Integration
- Budget Tracking
- Motor Control and Enclosure

Akshat
- PCB Lead
- Power Distribution Management

GANTT Chart

Project start date:	9/25/2023
Project Name:	**DewBusters**

#	Task	Assigned To	Week of 02/04	Week of 02/11	Week of 02/18	Week of 02/25	Week of 03/03	Week of 03/10	Week of 03/17	Week of 03/24	Week of 03/31
1	Line Following Testing	Anush									
2	Camera Module Integration	Ritvik									
3	Enclosure Building	Maheer									
4	Further Communication Testing	Ritvik									
5	Tension Measurement	Akshat									
6	Cleaning Mechanism Testing	Anush									
7	PCB (CDR Deliverable)	Akshat									
		Maheer									
8	PCB Integration	Akshat									
9	Testing the system on field	All									
11	Software Debugging and Testing	Anush									
		Ritvik									
12	Budget Tracking	Maheer									
13	CDR Prep	All									

Questions?

Citations

1. https://www.paraide.com/products/maintenance-tools/golf-course/the-dew-draggin-/
2. https://www.youtube.com/watch?v=akTegAQMoxo
3. https://parwest.com/product/tacit-dew-brush/?attribute_pa_color=green&gclid=Cj0KCQjwmvSoBhDOARIsAK6aV7j6ElDrxx6AI6M0-khq_RL0a5ii-Z4-3Y6KSKFcNRmuFcFu5DdSzBsaAh9hEALw_wcB
4. https://turfcareblog.com/three-methods-of-managing-turf-surface-dew/
5. https://www.youtube.com/watch?v=YU17L650k3s
6. https://www.youtube.com/watch?v=I7IFsQ4tQU8