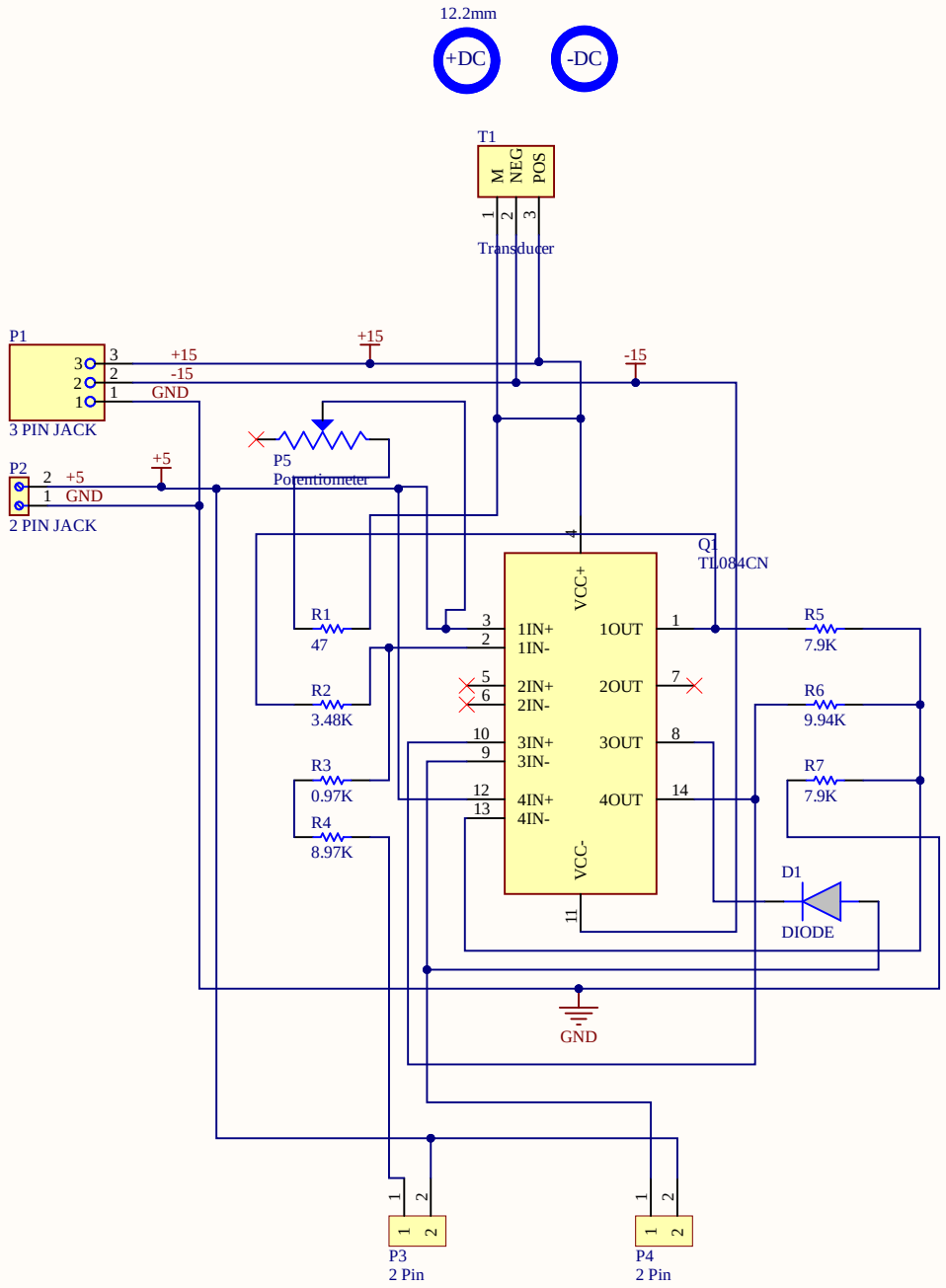

Title		
Size A4	Number	Revision
Date: 7/15/2026		Sheet of
File: C:\Users\..\Sheet1.SchDoc		Drawn By:

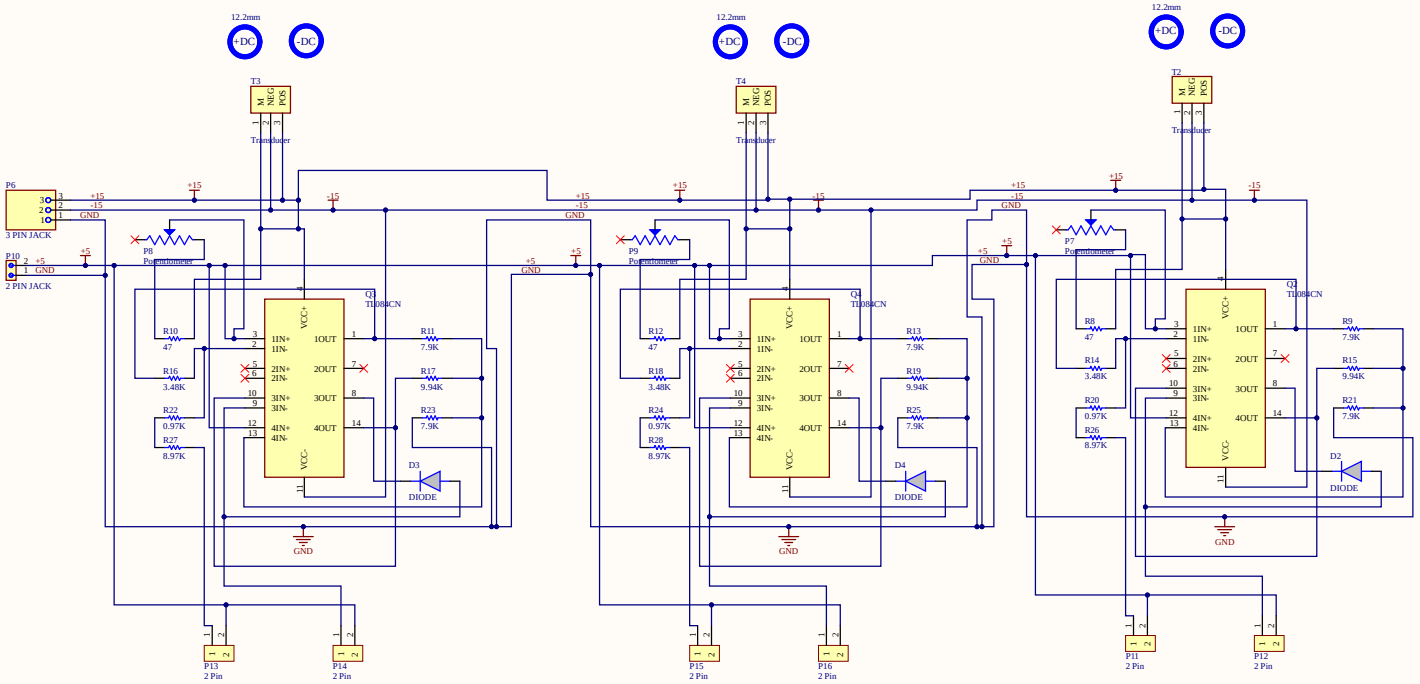

Title		
Size A2	Number	Revision
Date: 7/15/2026		Sheet of
File: C:\Users\...\Sheet2.SchDoc		Drawn By:

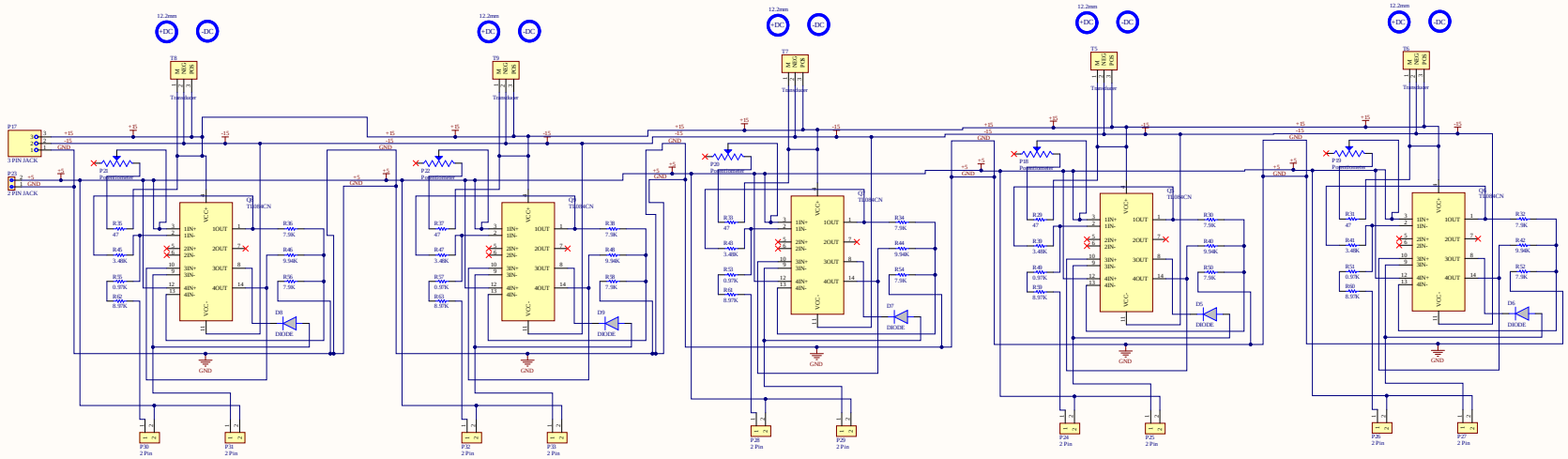

Title		
Size: A1	Number	Revision
Date: 7/13/2020		Sheet of
File: C:\Users...\Sheet3.SchDoc		Drawn By:

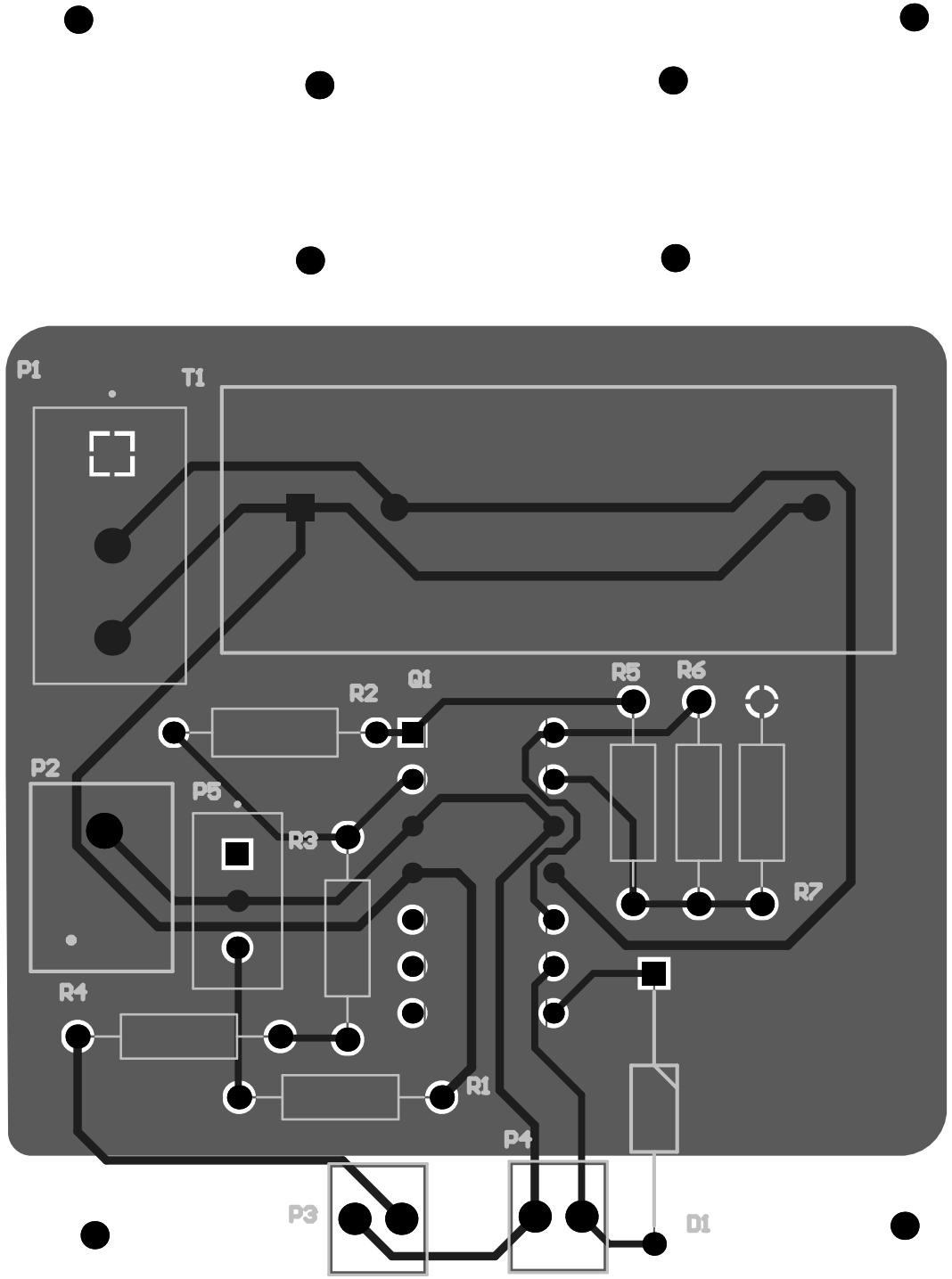
P1
T1
R2
Q1
R5
R6
P2
P5
R3
R7
R4
R1
P4
P3
D1

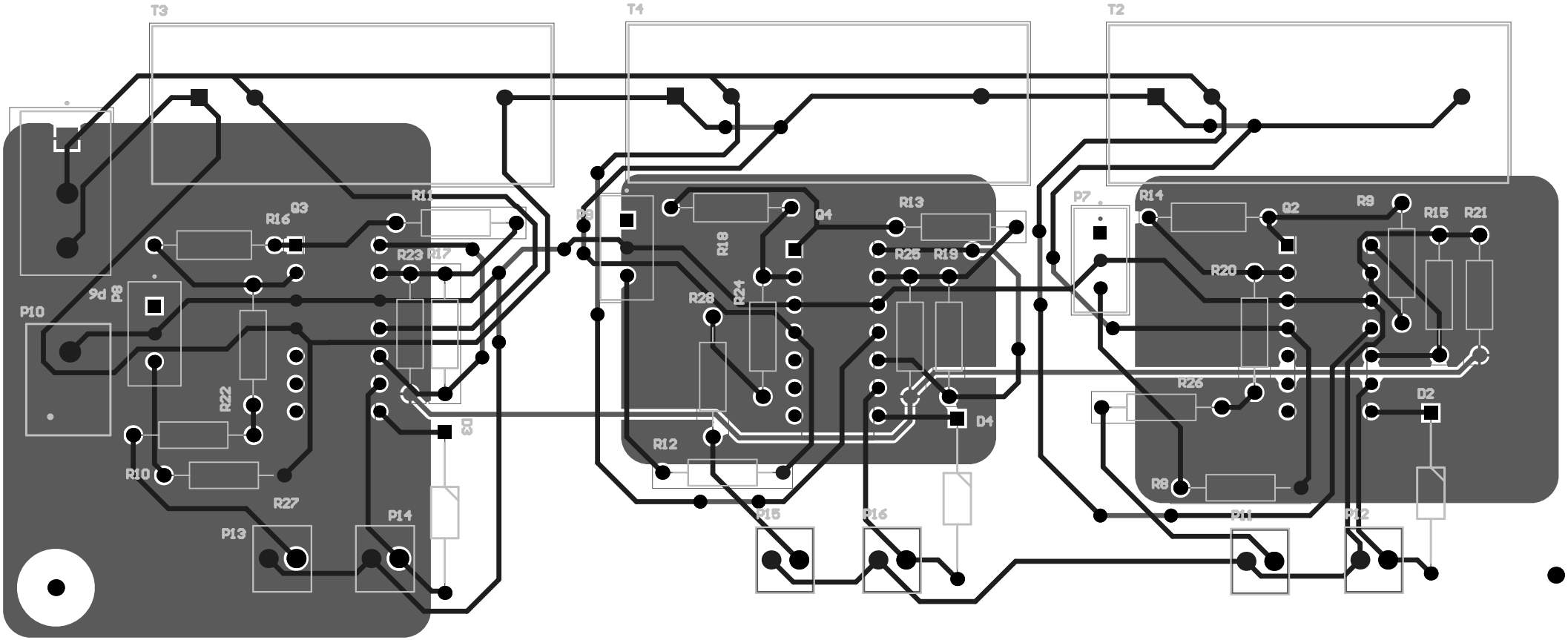
T3
T4
T2
P10
P9
P8
P7
P6
Q3
Q4
Q2
R16
R11
R23
R17
R22
R10
R27
R18
R24
R26
R12
R13
R25
R19
R14
R20
R9
R15
R21
R8
D3
D4
D2
P13
P14
P15
P16
P11
P12

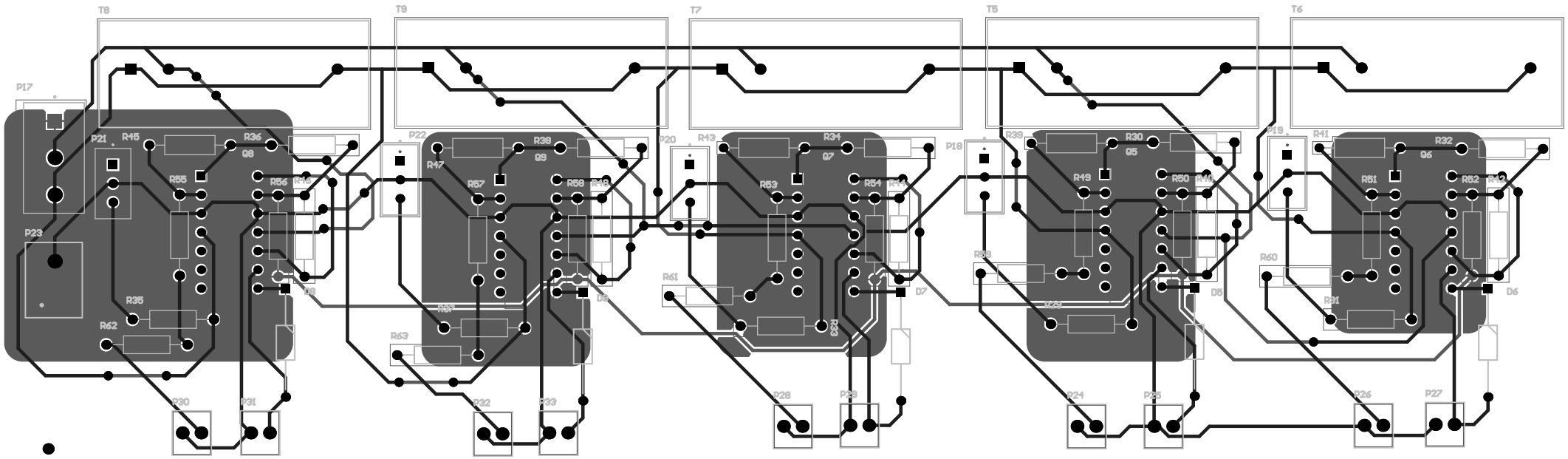
T8
T9
T7
T5
T6
P17
P21
R45
R36
Q8
R55
R56
R44
D8
P23
R35
R62
P30
P31
P22
R38
Q9
R47
R57
R58
R46
D9
R37
R63
P32
P33
P20
R43
R34
Q7
R53
R54
R42
D7
R61
Q3
P28
P29
P18
R39
R30
Q5
R49
R50
R40
D5
R33
R25
P24
P25
P19
R41
R32
Q6
R51
R52
R43
D6
R60
R31
P26
P27