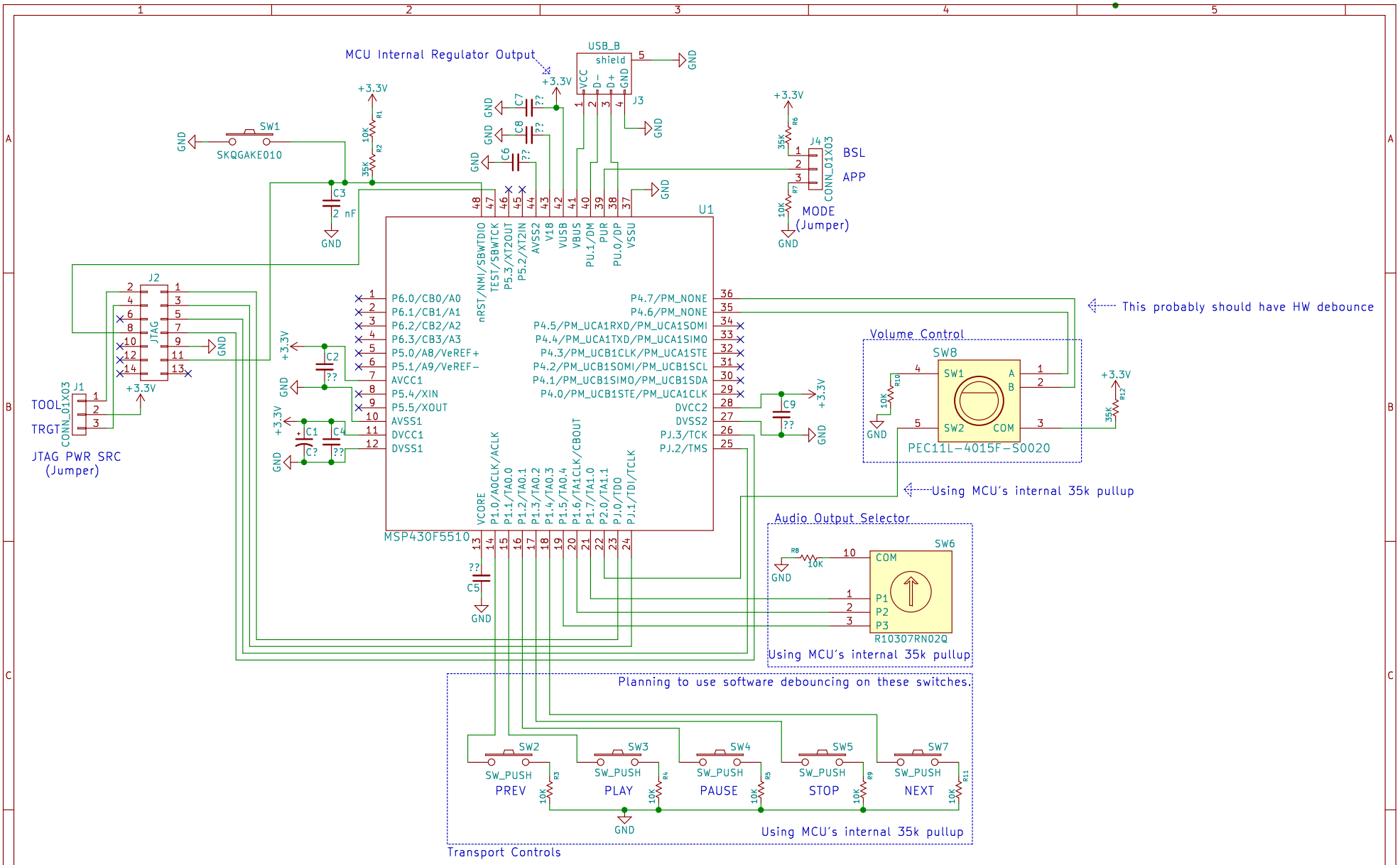

All resistors are 5% 1/4 watt unless otherwise specified
TODO: Spec transport control switches
TODO: Hardware Debounce on Pulse Encoder

Aaron Haun

Sheet: /
File: USBMediaController.sch

Title: Usb Media Controller

Size: USLetter	Date: 2016-06-13	Rev:
KiCad E.D.A. kicad 4.0.2-stable		Id: 1/1