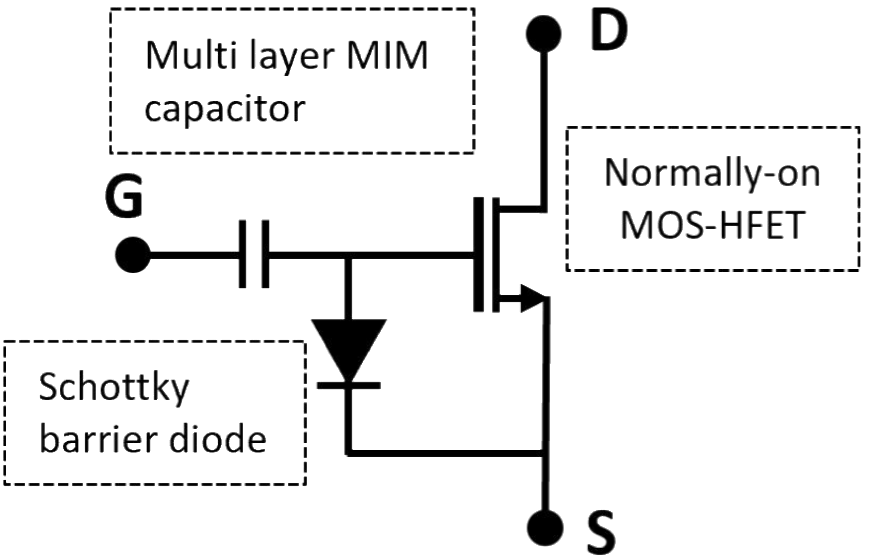
Multi layer MIM capacitor
D
Normally-on MOS-HFET
G
Schottky barrier diode
S

(a)

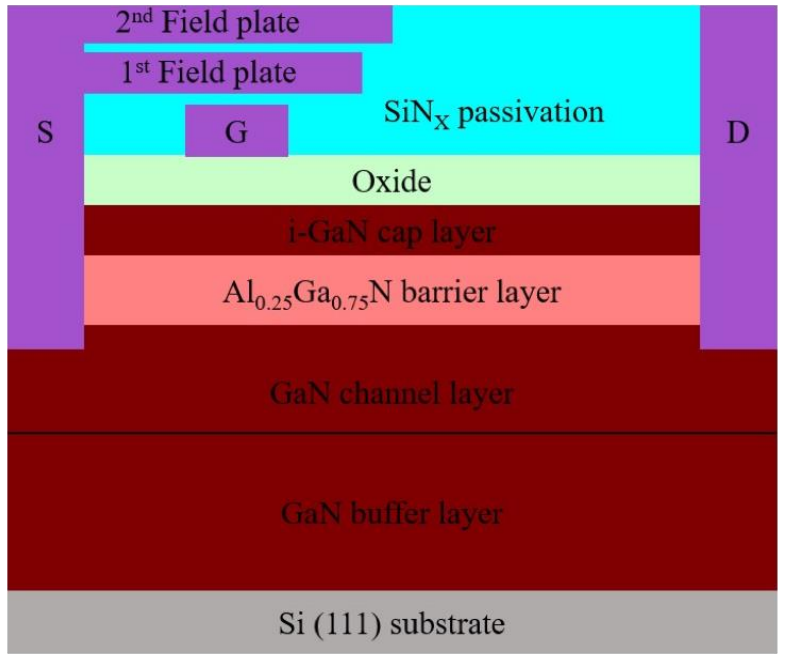
2nd Field plate
1st Field plate
S
G
SiNX passivation
D
Oxide
i-GaN cap layer
Al0.25Ga0.75N barrier layer
GaN channel layer
GaN buffer layer
Si (111) substrate

(b)

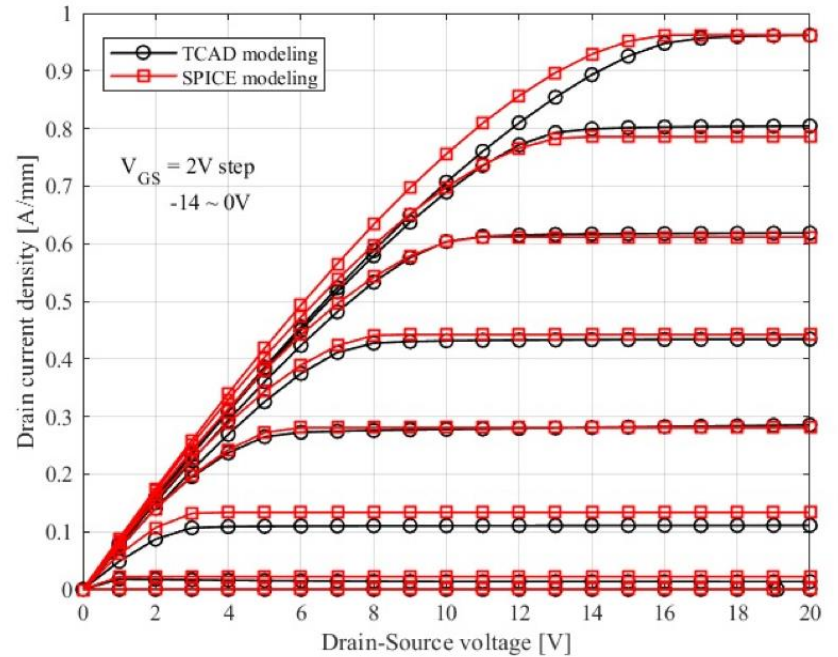
TCAD modeling
SPICE modeling
VGS = 2V step
-14 ~ 0V
Drain current density [A/mm]
Drain-Source voltage [V]
0
0.1
0.2
0.3
0.4
0.5
0.6
0.7
0.8
0.9
1
0
2
4
6
8
10
12
14
16
18
20

(c)