REVISION HISTORY		
REV	DESCRIPTIO	DATE
1		22/04/2009
2		07/07/2009
3		14/07/2009
4		15/07/2009

Third Angle Projection

Magnetic Shields
Electromagnetic Engineering

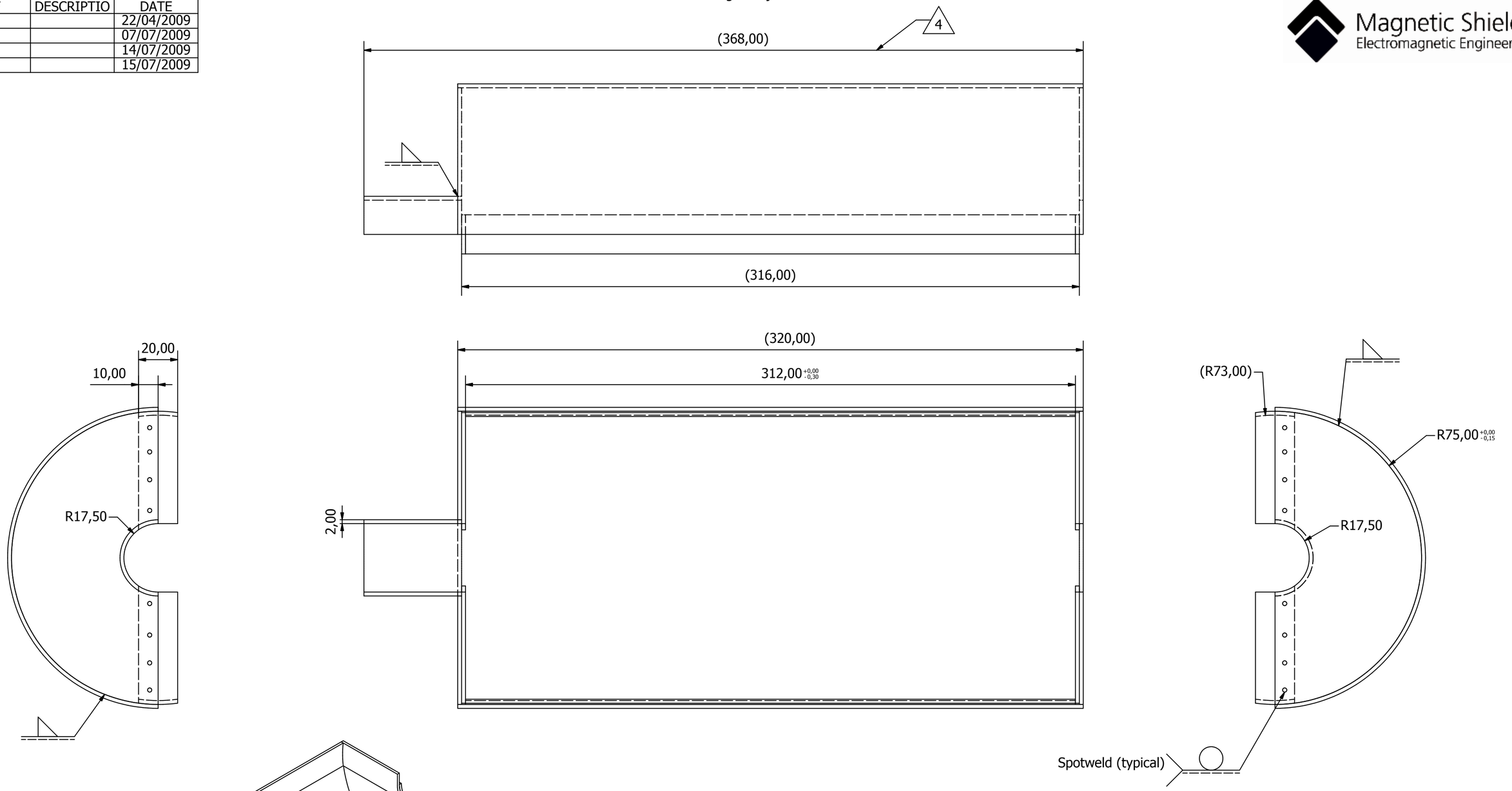

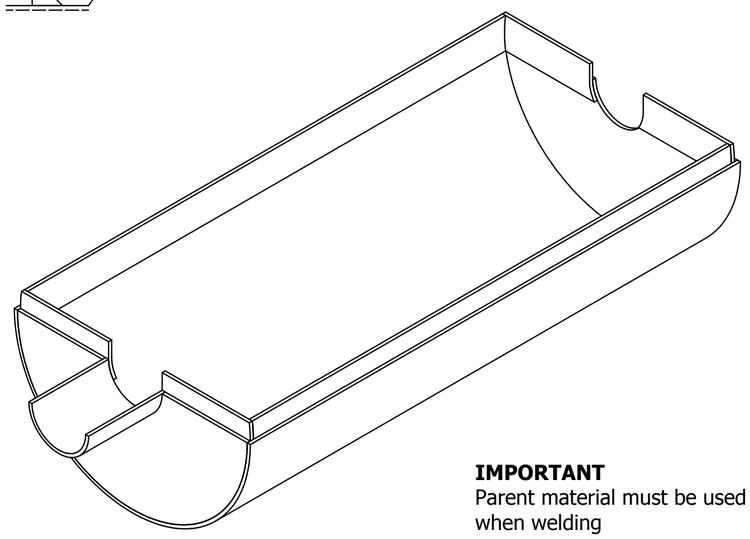

APPROVED FOR
PRODUCTION RELEASE

Heat Treatment - Soft Iron

1. Thoroughly degrease
2. Load onto even surface (<0.01mm, ceramic plate is recommended)
3. Use reducing atmosphere, vacuum or inert pure dry hydrogen (-40 °C exit dewpoint)
4. Heat to 850 °C @ <_ 2 °C/min
5. Hold for 4 hours
6. Cool to 200 °C @ <_ 1° C/min
7. After heat treatment lightly coat in oil to prevent corrosion

IMPORTANT
Parent material must be used for filler when welding

CAD GENERATED MASTER
DO NOT MANUALLY ALTER

Dimensions in Millimetres

Designed by	Checked by	Approved by	Date		Date	General Tolerance + or - 0.3mm
nickm	M.Bober	M.Bober	16/07/2009		22/04/2009	

Description:
Inner Shield - Lower Half
2mm Pure Iron - see note for H/T
All parts burr free & clean finish

JAGIELLONIAN UNIVERSITY

SK 1901 | Edition 4 | Sheet 1 / 6

REVISION HISTORY		
REV	DESCRIPTIO	DATE
1		22/04/2009
2		07/07/2009
3		14/07/2009
4		15/07/2009

Third Angle Projection

Magnetic Shields
Electromagnetic Engineering

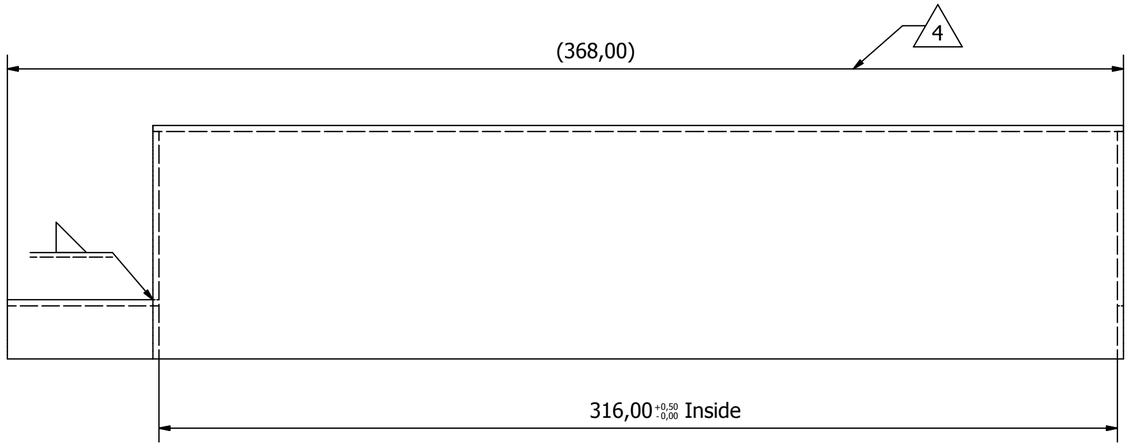

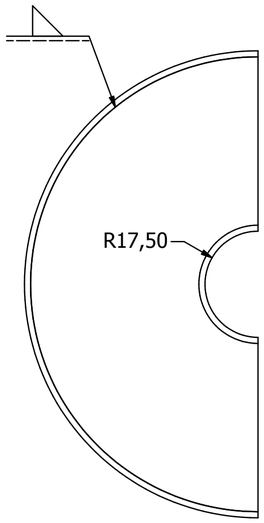

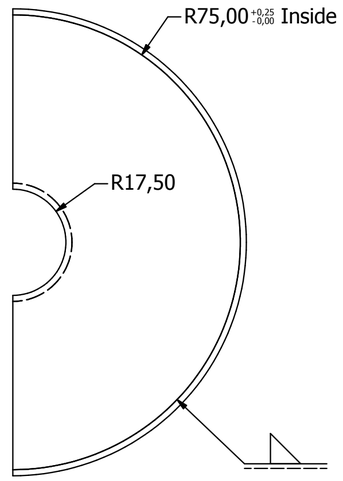

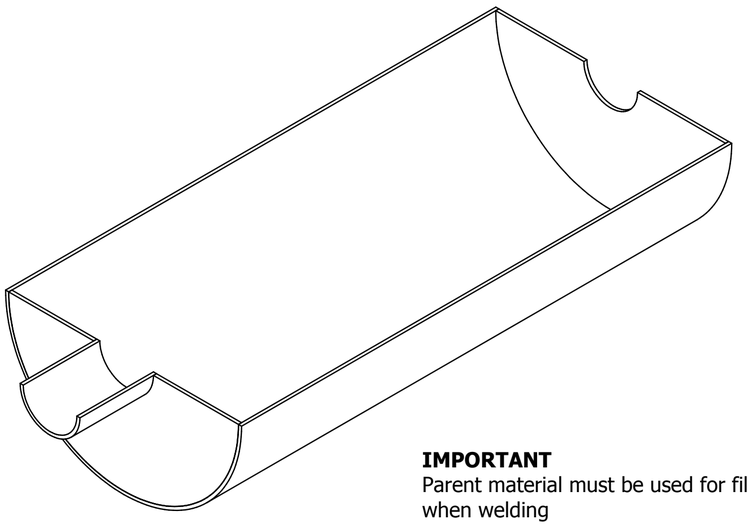

IMPORTANT
Parent material must be used for filler when welding

APPROVED FOR
PRODUCTION RELEASE

Heat Treatment - Soft Iron

1. Thoroughly degrease
2. Load onto even surface (<0.01mm, ceramic plate is recommended)
3. Use reducing atmosphere, vacuum or inert pure dry hydrogen (-40 °C exit dewpoint)
4. Heat to 850 °C @ <_ 2 °C/min
5. Hold for 4 hours
6. Cool to 200 °C @ <_ 1° C/min
7. After heat treatment lightly coat in oil to prevent corrosion

Dimensions in Millimetres

Designed by	Checked by	Approved by	Date		Date	General Tolerance
nickm	M.Bober	M.Bober	16/07/2009		22/04/2009	+ or - 0.3mm

Description:
Inner Shield - Upper Half
2mm Pure Iron - see note for H/T
All parts burr free & clean finish

JAGIELLONIAN UNIVERSITY

SK 1901 | Edition 4 | Sheet 2 / 6

CAD GENERATED MASTER
DO NOT MANUALLY ALTER

REVISION HISTORY		
REV	DESCRIPTIO	DATE
1		22/04/2009
2		07/07/2009
3		14/07/2009
4		15/07/2009

Third Angle Projection

Magnetic Shields
Electromagnetic Engineering

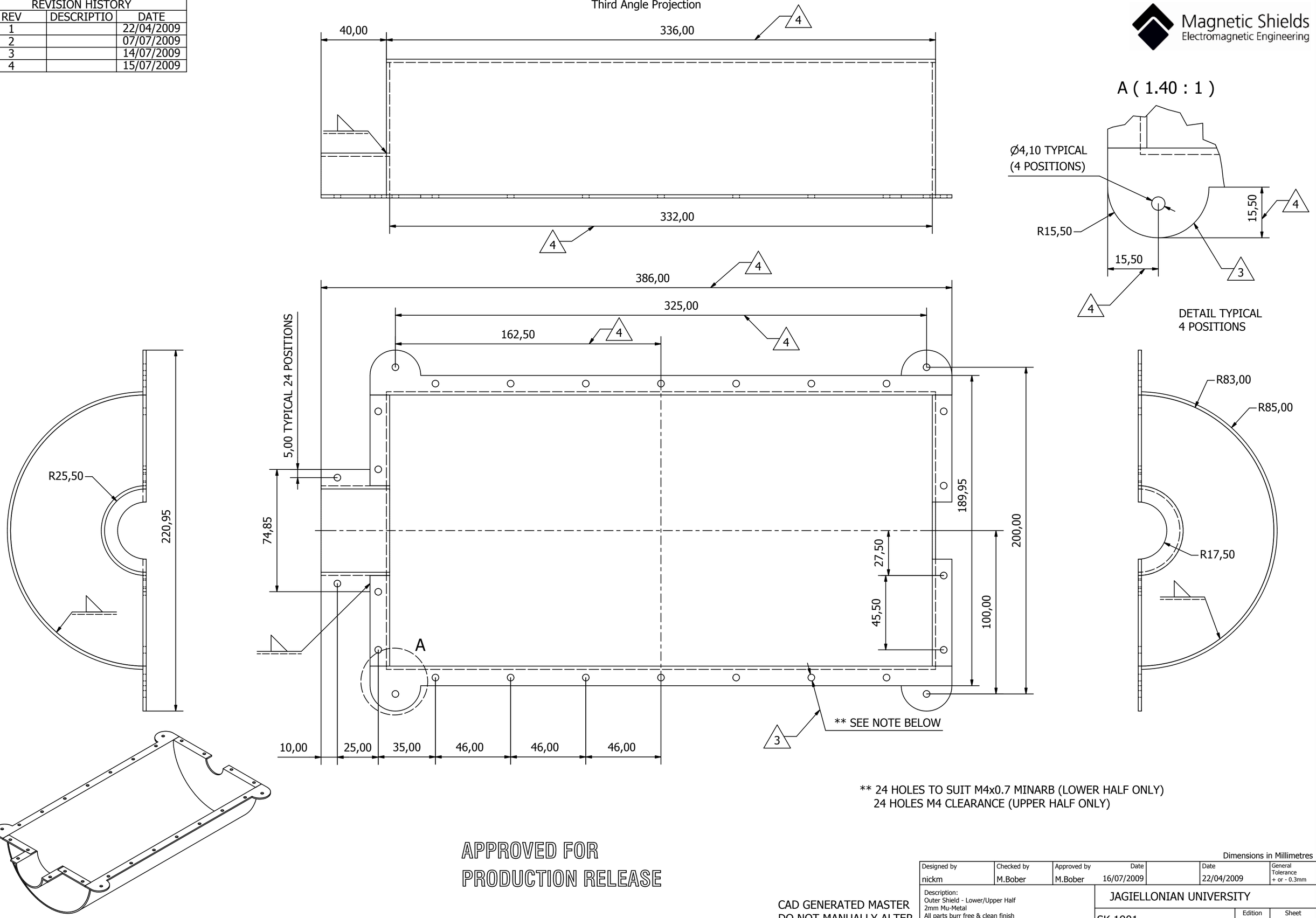

** 24 HOLES TO SUIT M4x0.7 MINARB (LOWER HALF ONLY)
24 HOLES M4 CLEARANCE (UPPER HALF ONLY)

APPROVED FOR
PRODUCTION RELEASE

CAD GENERATED MASTER
DO NOT MANUALLY ALTER

Dimensions in Millimetres

Designed by	Checked by	Approved by	Date		Date	General Tolerance
nickm	M.Bober	M.Bober	16/07/2009		22/04/2009	+ or - 0.3mm

Description:
Outer Shield - Lower/Upper Half
2mm Mu-Metal
All parts burr free & clean finish
Heat treat to MSL008 issue 2

JAGIELLONIAN UNIVERSITY

SK 1901 | Edition 4 | Sheet 3 / 6

REVISION HISTORY		
REV	DESCRIPTIO	DATE
1		22/04/2009
2		07/07/2009
3		14/07/2009
4		15/07/2009

Third Angle Projection

Magnetic Shields
Electromagnetic Engineering

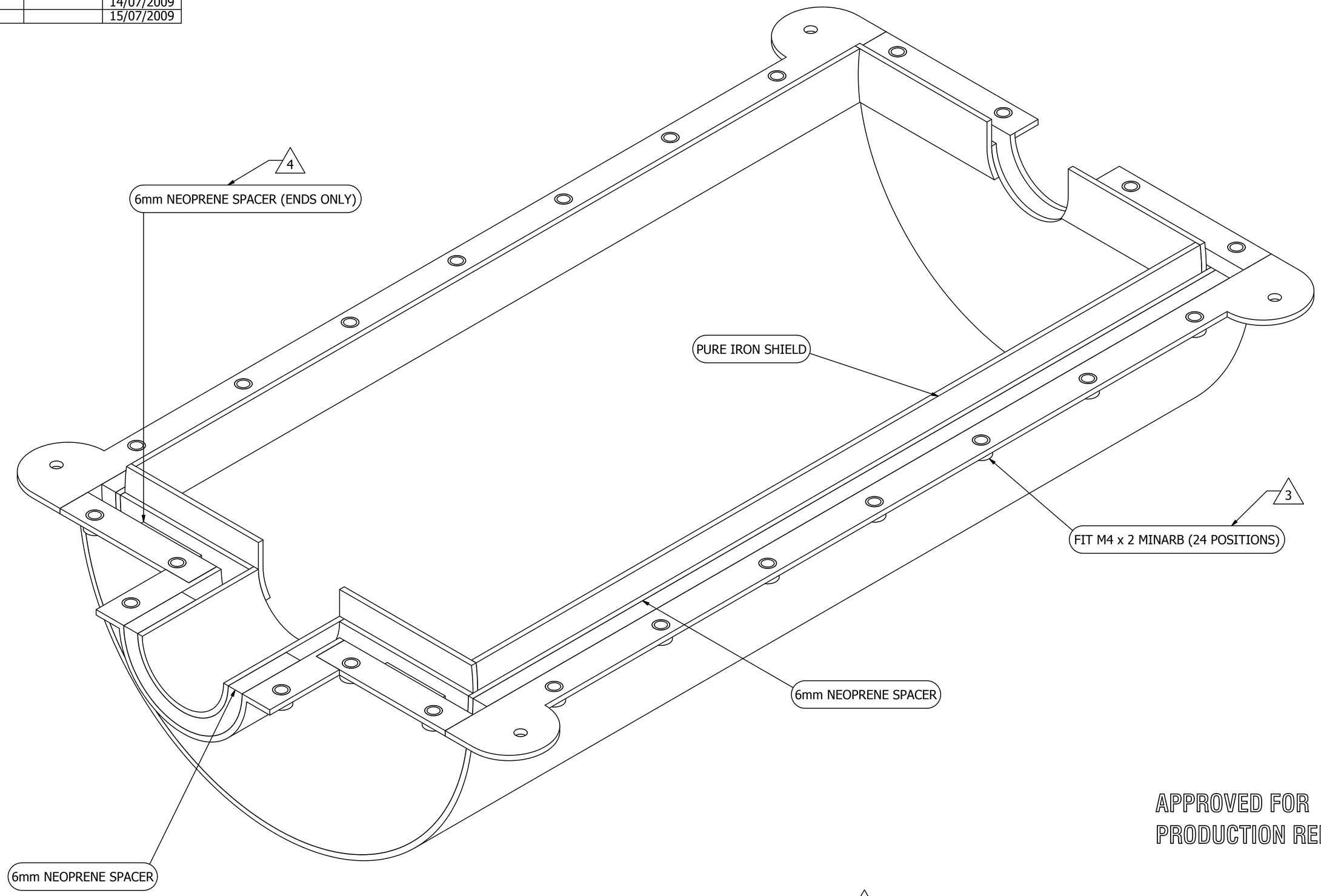

APPROVED FOR
PRODUCTION RELEASE

4

NOTE:
NEOPRENE SPACER TO BE SELF ADHESIVE BOTH SIDES
ALL FIXINGS TO BE BRASS OR STAINLESS STEEL GRADE 316

CAD GENERATED MASTER
DO NOT MANUALLY ALTER

Dimensions in Millimetres

Designed by	Checked by	Approved by	Date		Date	General Tolerance
nickm	M.Bober	M.Bober	16/07/2009		22/04/2009	+ or - 0.3mm

Description:
Lower Shield Assembly

JAGIELLONIAN UNIVERSITY

SK 1901 | Edition 4 | Sheet 4 / 6

REVISION HISTORY		
REV	DESCRIPTIO	DATE
1		22/04/2009
2		07/07/2009
3		14/07/2009
4		15/07/2009

Third Angle Projection

Magnetic Shields
Electromagnetic Engineering

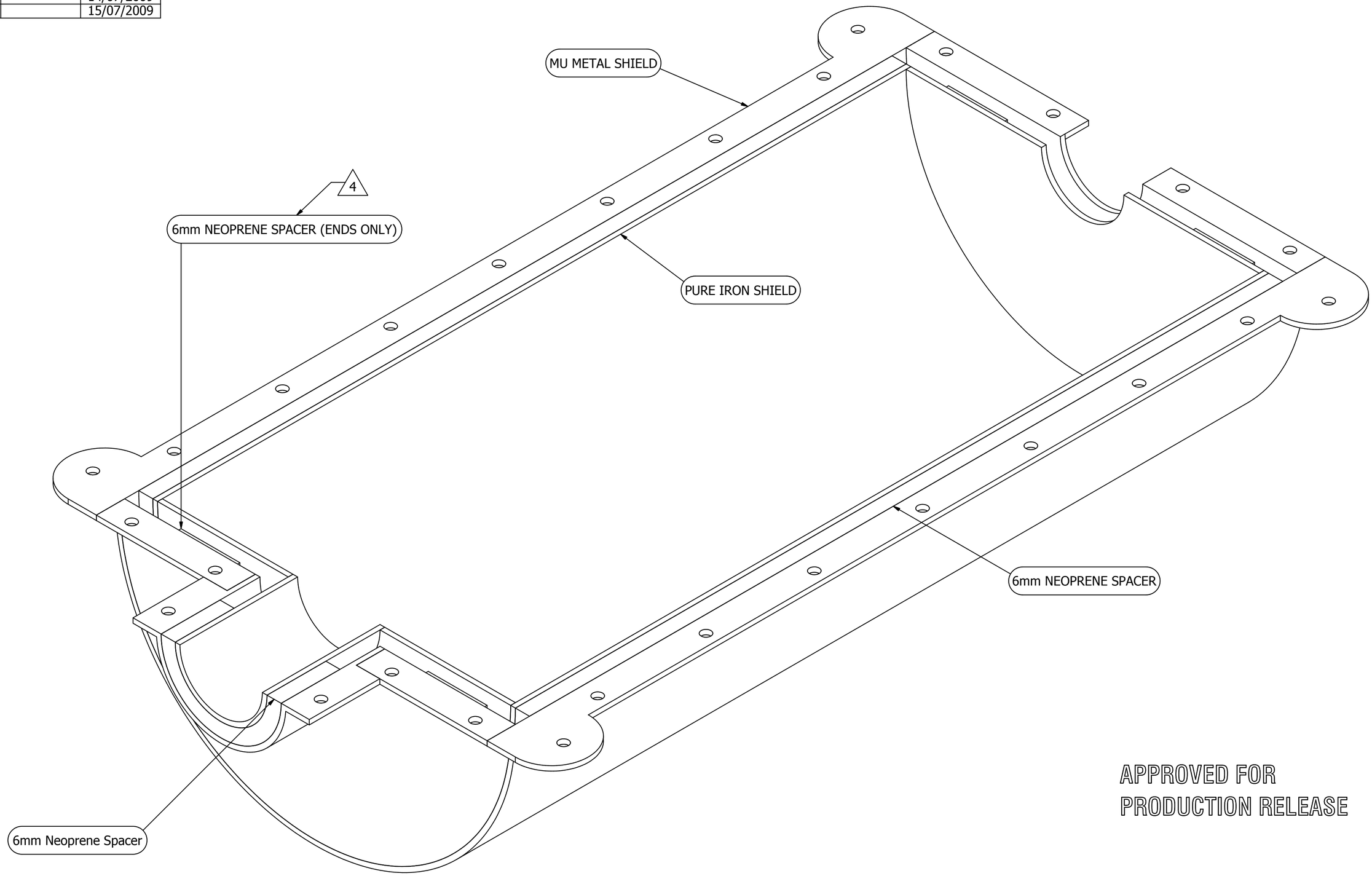

APPROVED FOR
PRODUCTION RELEASE

Dimensions in Millimetres

Designed by	Checked by	Approved by	Date		Date	General Tolerance
nickm	M.Bober	M.Bober	16/07/2009		22/04/2009	+ or - 0.3mm

Description:
Upper Shield Assembly

JAGIELLONIAN UNIVERSITY

SK 1901 | Edition 4 | Sheet 5 / 6

4

NOTE:
NEOPRENE SPACER TO BE SELF ADHESIVE BOTH SIDES
ALL FIXINGS TO BE BRASS OR STAINLESS STEEL GRADE 316

CAD GENERATED MASTER
DO NOT MANUALLY ALTER

REVISION HISTORY		
REV	DESCRIPTIO	DATE
1		22/04/2009
2		07/07/2009
3		14/07/2009
4		15/07/2009

Third Angle Projection

Magnetic Shields
Electromagnetic Engineering

APPROVED FOR
PRODUCTION RELEASE

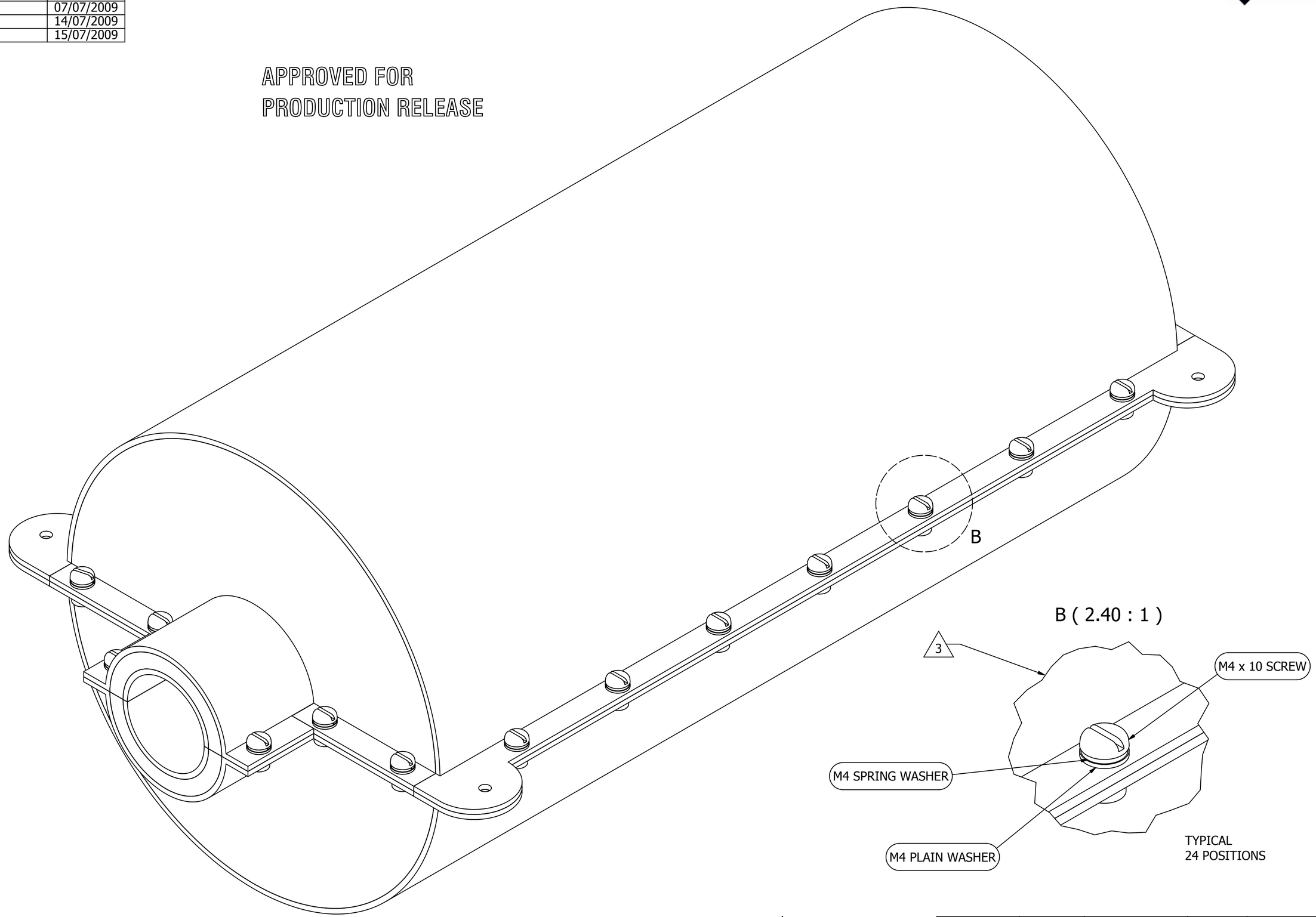

4

NOTE:
ALL FIXINGS TO BE BRASS OR STAINLESS STEEL GRADE 316

CAD GENERATED MASTER
DO NOT MANUALLY ALTER

Designed by	Checked by	Approved by	Date		Date	
nickm	M.Bober	M.Bober	16/07/2009		22/04/2009	

Description:
Shield Assembly

JAGIELLONIAN UNIVERSITY

SK 1901 | Edition 4 | Sheet 6 / 6