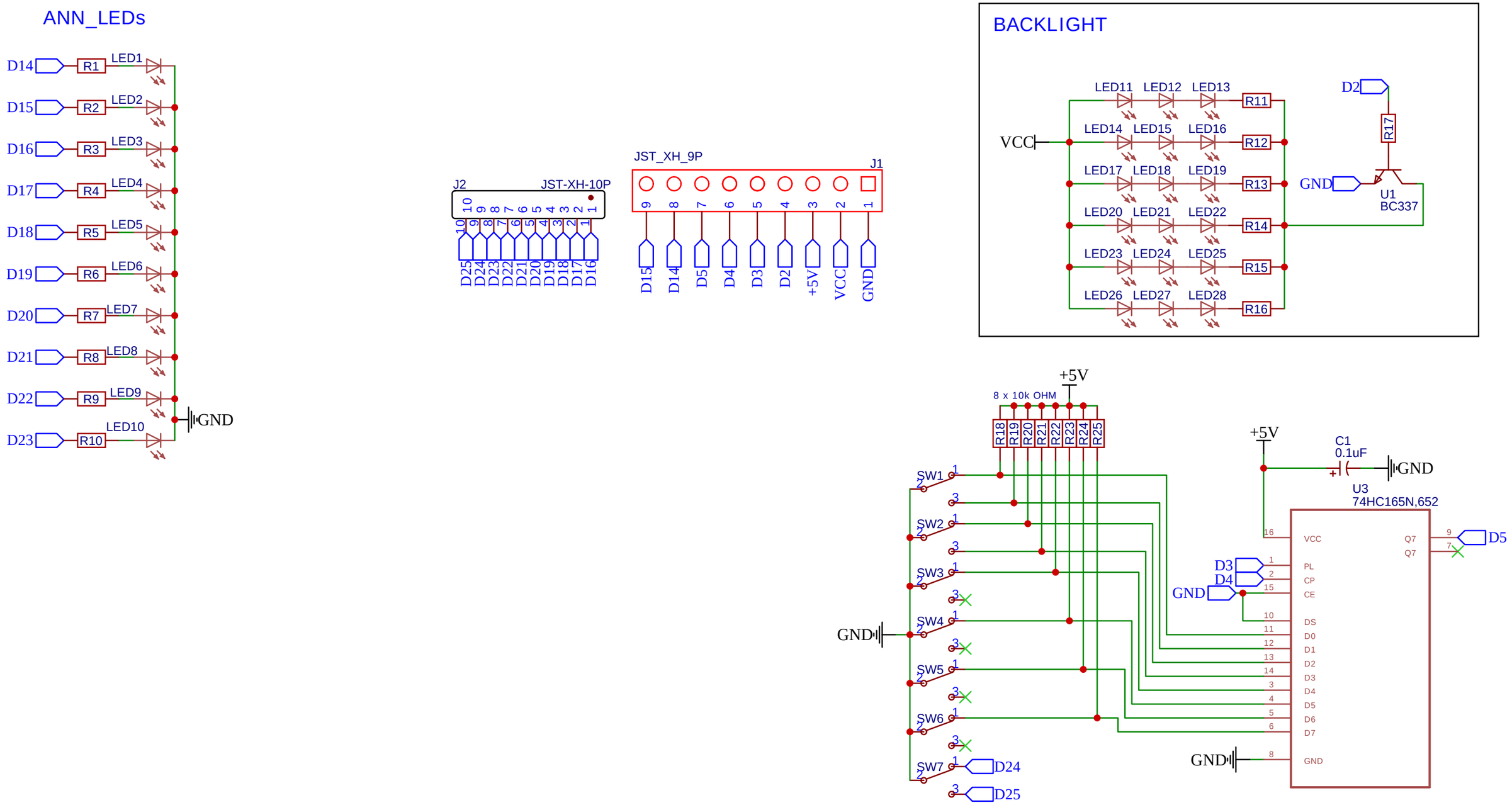

TITLE: 737_OH_01_THT		REV: 1.1
	Company:	Sheet: 1/1
	Date: 2023-02-22 Drawn By: Mark_Alpha	