LUBRICATION CHART
BR-610JR + Center rail

N.B! This instruction applies to production in 1-shift (8 hours/ day)

Interval	Place of lubrication	**Item**	Number of lubric. points	Lubrication type
1 time / day	Chain	**1**	2	Group I
1 time / week	Flange bearing housing, drive side	**2**	3	Group V
1 time / week	Flange bearing housing, spiked roller	**3**	2	Group V
1 time / week	Flange bearing housing lower, centering arms	**4**	8	Group V
1 time / week	Flange bearing housing, rolls	**5**	16	Group V
1 time / week	Bearing unit, centering arms	**6**	8	Group V
1 time / week	Flange bearing housing, spiked roller	**7**	2	Group V
1 time / week	Bearing unit, chain wheel	**8**	4	Group V
1 time / week	Cylinder bracket	**9**	1	Group V
1 time / day	Chain, spiked roller	**10**	2	Group I
1 time / week	Cylinder bracket	**11**	3	Group V
1 time / week	Cylinder bracket	**12**	4	Group V
1 time / week	Parallell rod bracket	**13**	4	Group V
1 time / month	Gear motor Control for oil leakage. Change oil after 20000 of operating hours or after 3 years.	**14, 15, 16**	6	Group III

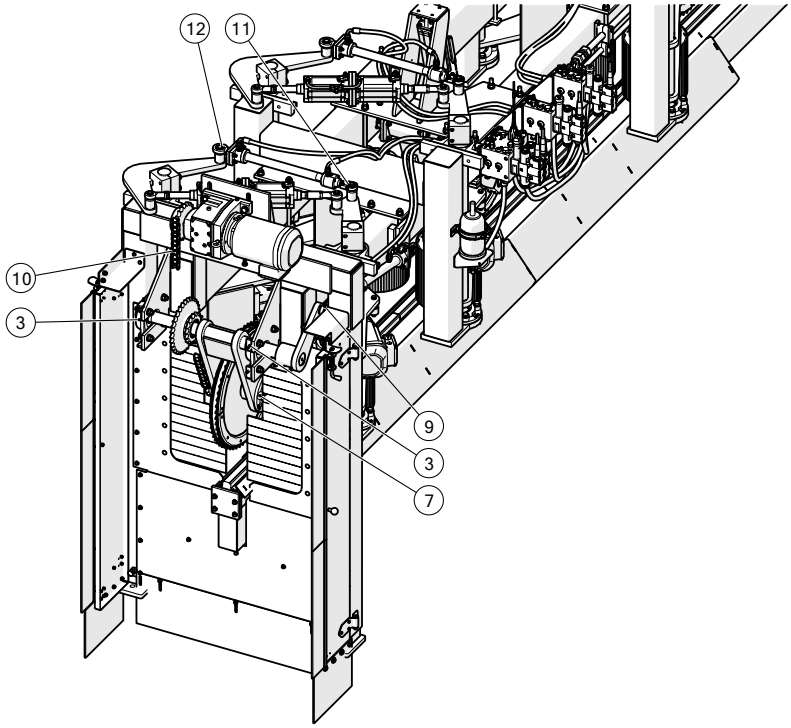

LUBRICATION CHART
BR-610JR + Center rail

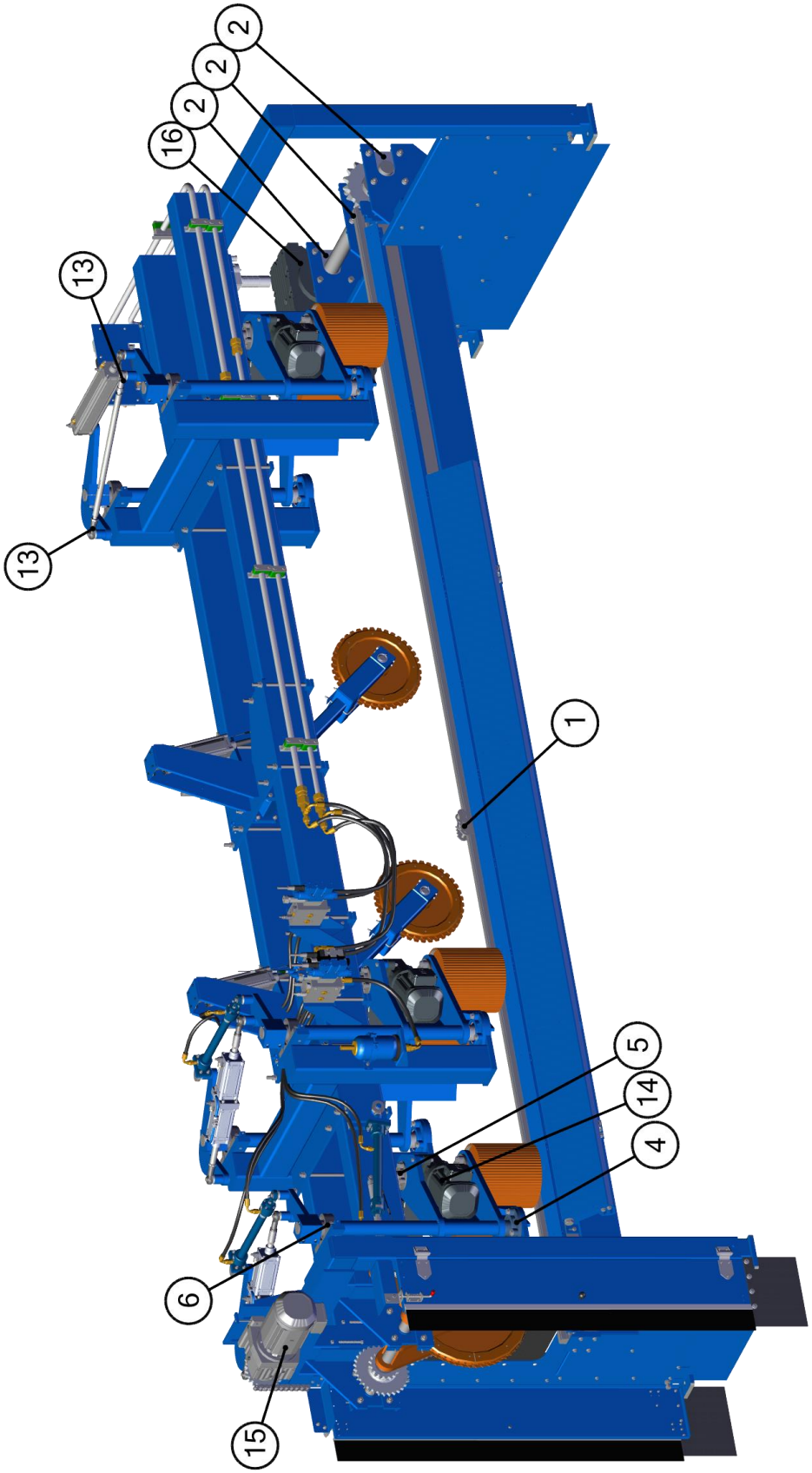
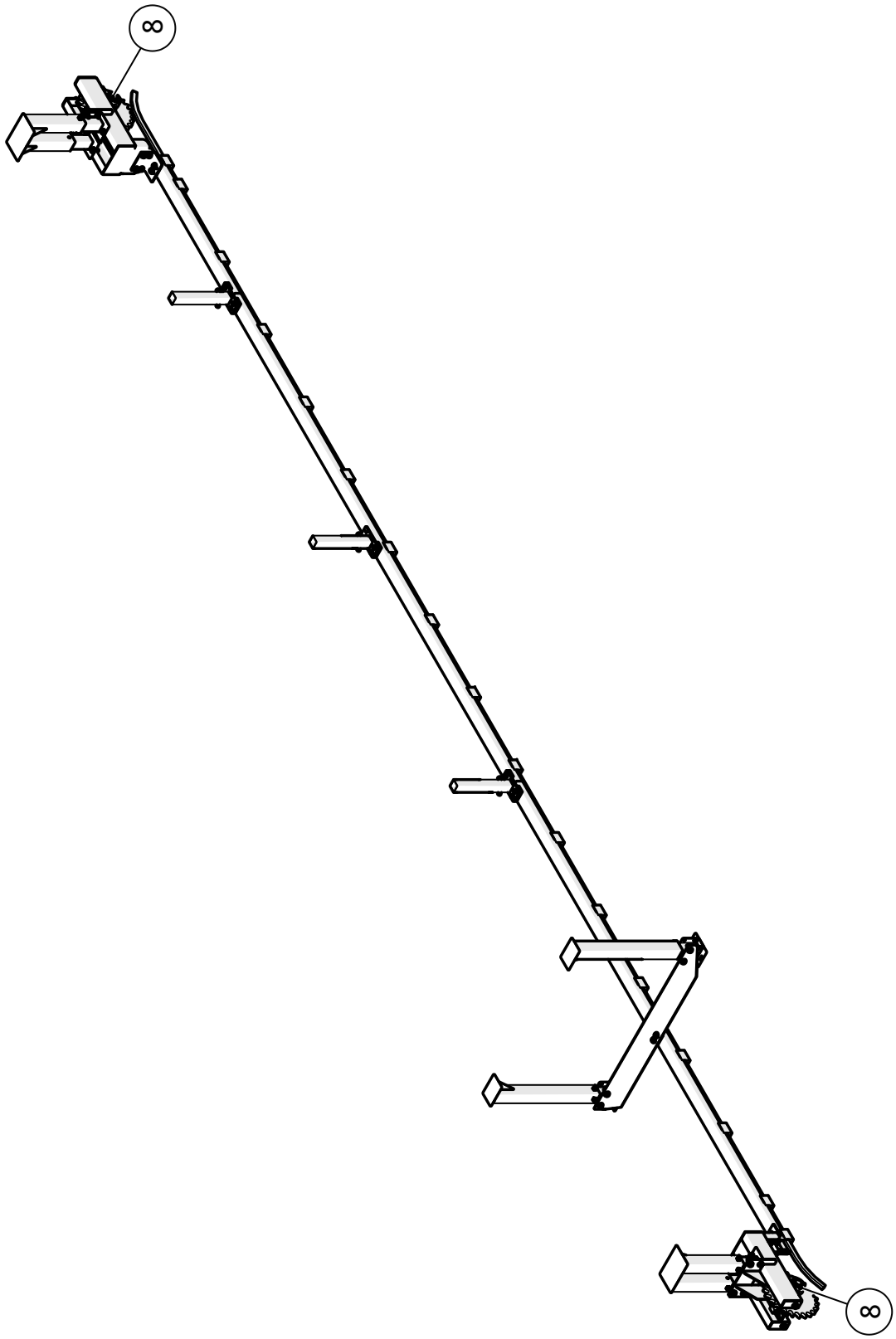
LUBRICATION CHART
BR-610JR + Center rail