LUBRICATION CHART
500A

N.B! This instruction applies to production in 1-shift (8 hours/ day)
M=Lubrication points that must be lubricated manually even if central lubrication is applied.

	Interval	Place of lubrication	Item	Number of lubric. points	Lubrication type
	1 time / week	Feed rolls, bearing	1	8	Group V
	1 time / week	Parallellarm, bearing	3	4	Group V
M	1 time / week	Hydraulic and servocylinder, bearing block	4	4	Group V
M	1 time / week	Pneumatic cylinder, mid bracket	5	4	Group V
M	1 time / week	Pneumatic cylinder, link bearing	7	2	Group V
	1 time / week	Guide shafts	2	4	Group V
M	**1 time / month**	Gear motor Control and in case of oil leakage,. change according to instructions from SEW. Change before 3 years of operation.	6	4	Group III

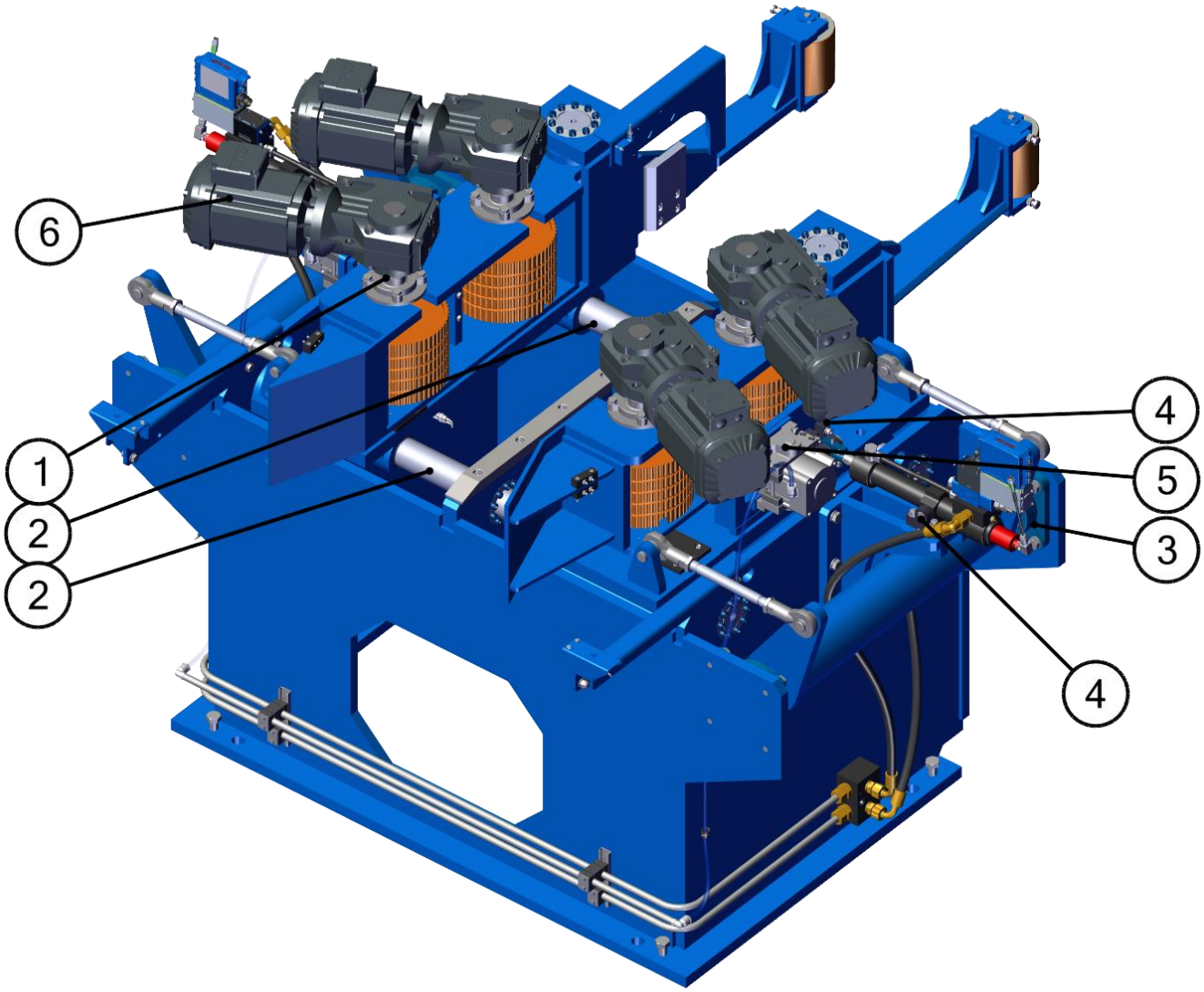

LUBRICATION CHART
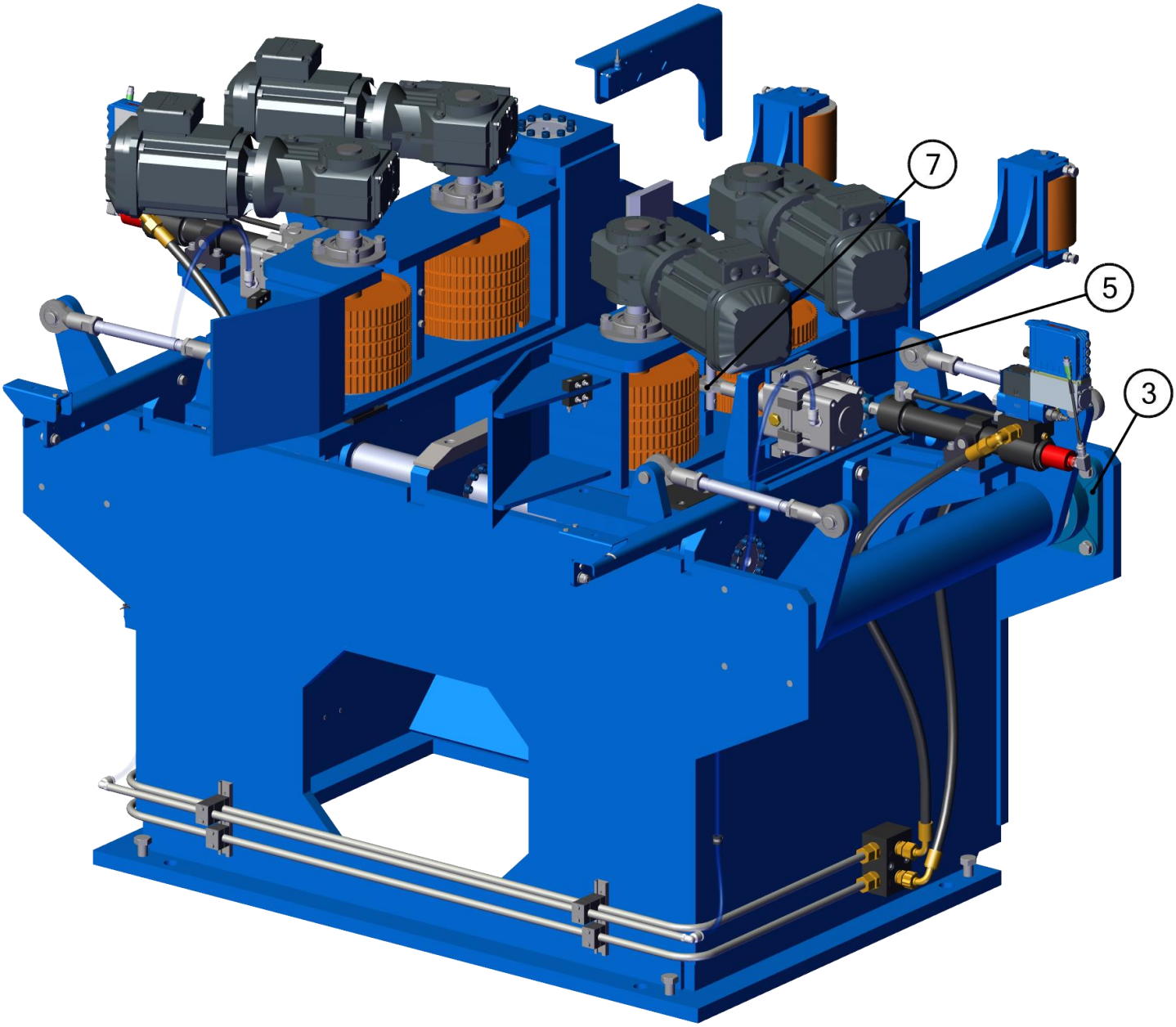
500A