LUBRICATION CHART
P-700

N.B! This instruction applies to production in 1-shift (8 hours/ day)
It refers to the left half of the machine. Double the number of lubrication points for the whole machine. LN=Lubrication nipple, M=Lubrications that allways must be done manually even if central lubrication is made.

	Interval	Lubrication nipple	Place of lubrication	**Item**	Number of lubric. points	Lubrication type
	1 time / week	Upper cutter table	Inner guide (LN1) Outer guide (LN2)	**1** **2**	1 1	Group V Group V
	1 time / week	Lower cutter table	Inner guide (LN1) Outer guide (LN2)	**3** **4**	1 1	Group V Group V
	1 time / week	Lower table	Inner tilt shaft Outer tilt shaft Runner blocks	**5** **6** **7**	1 1 4	Group V Group V Group V
M	**1 time / week**	-	Cardan shafts	**8**	6	Group V
	1 time / month	-	Bearing block cylinder Piston rod lug cylinder	**9** **10**	8 2	Group V Group V
M	**5g/375h** Cutter shafts, **Lower bearing** preening blades	Upper cutter module	Inner bearing cutter shaft (LN3) Outer bearing cutter shaft (LN4)	**11** **12**	1 1	Group V Group V
M		Lower cutter module	Inner bearing cutter shaft (LN3) Outer bearing cutter shaft (LN4)	**13** **14**	1 1	Group V Group V
M	N.B! Lubrication 5g with an interval of 375 operating hours.	Upper cutter module	Lower bearing preening blade (LN6)	**16**	1 1	Group V Group V
M		Lower cutter module	Lower bearing preening blade (LN6)	**18**	1	Group V
M		Upper splines bearing	Upper bearing cap Lower bearing cap	**19** **20**	1 1	Group V Group V
M		-	Bearing cap lower splines bearing	**21**	1	Group V

LUBRICATION CHART
P-700

M	**10g/375h** **Upper bearing** Preening blades NB! Lubrication 10g with an interval of 375 operating hours.	Upper cutter module	Upper bearing cutter-preening blade (LN5)	**15**	1	Group V
M		Lower cutter module	Upper bearing cutter-preening blade (LN5)	**17**	1	Group V
	According to sign on motor	-	Electric motor, cutters and preening blades Service and maintence according to ABB instructions	**22**	3	
	1 time / week **Cleaning**	-	Splined shafts Guides	**23** **24**	2 4	Detergent: Aricur

LUBRICATION CHART
P-700

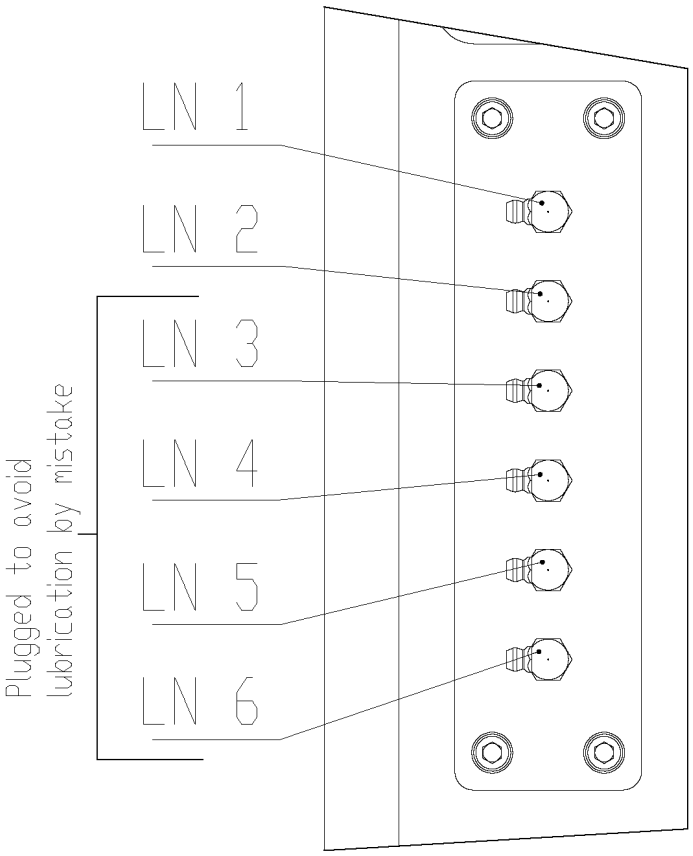

Pos according to table	Upper cutter module	Lower cutter module	
Pos	1	3	
Pos	2	4	
Pos	11	13	
Pos	12	14	
Pos	15	17	Upper bearing preening blade
Pos	16	18	Lower bearing preening blade

Remove plug and attach lubrication nipple to lubricate.

When lubricating, rotate bearing by hand, lubricate at operating temperature.

Reattach plug to avoid lubrication by misstake.

LUBRICATION CHART
P-700

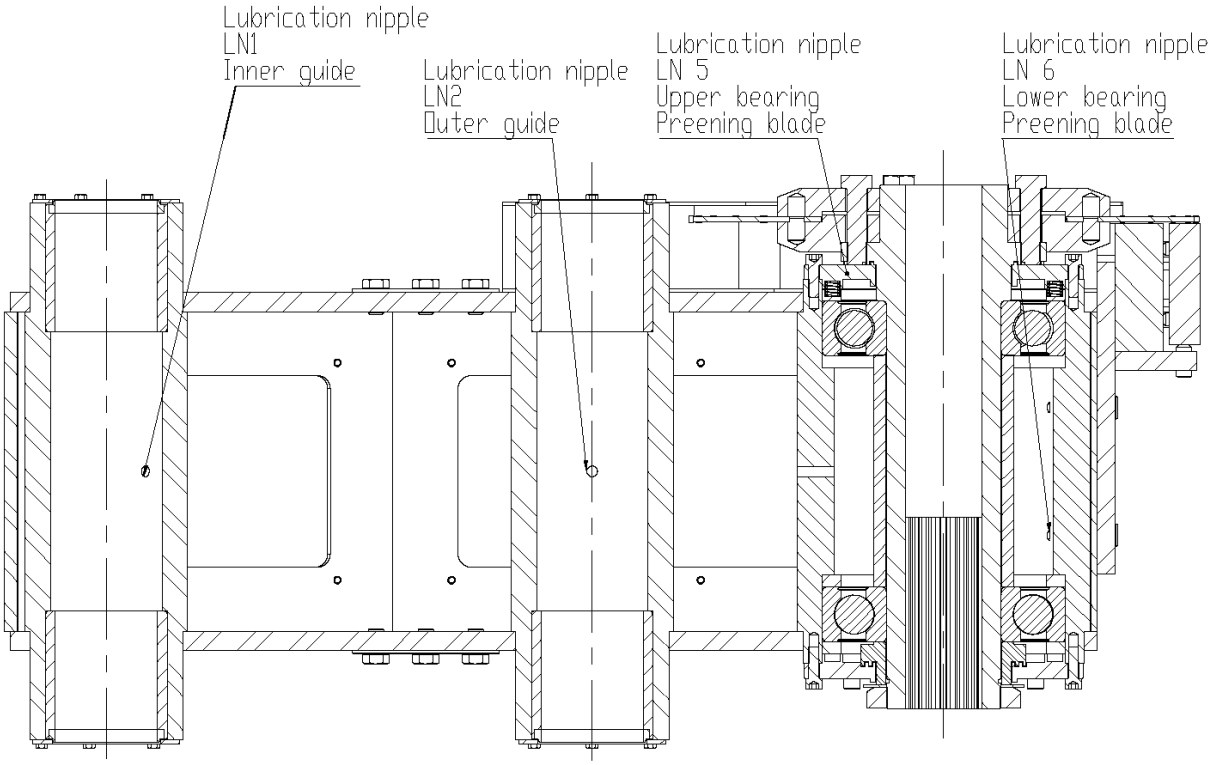

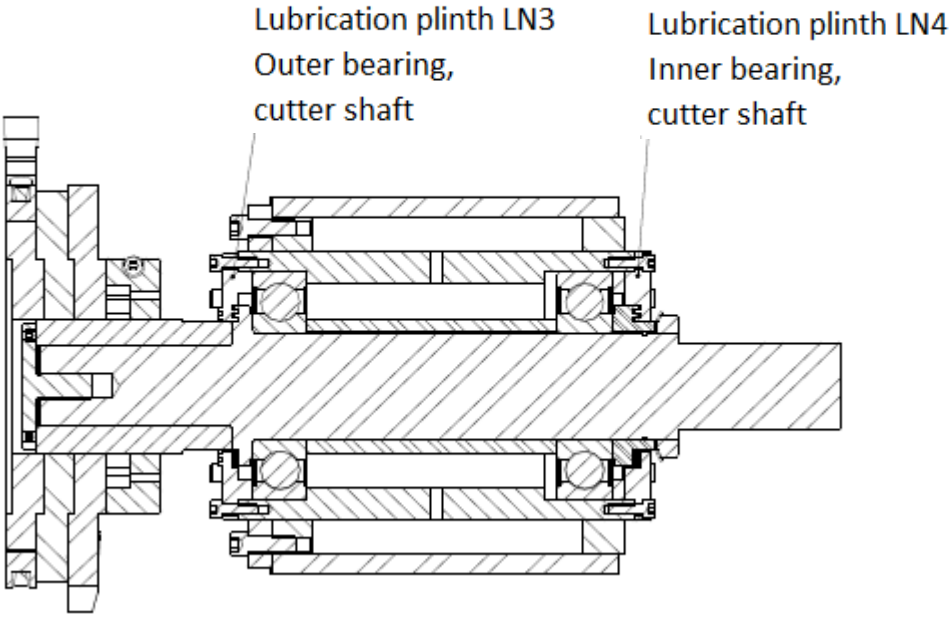

LUBRICATION CHART
P-700

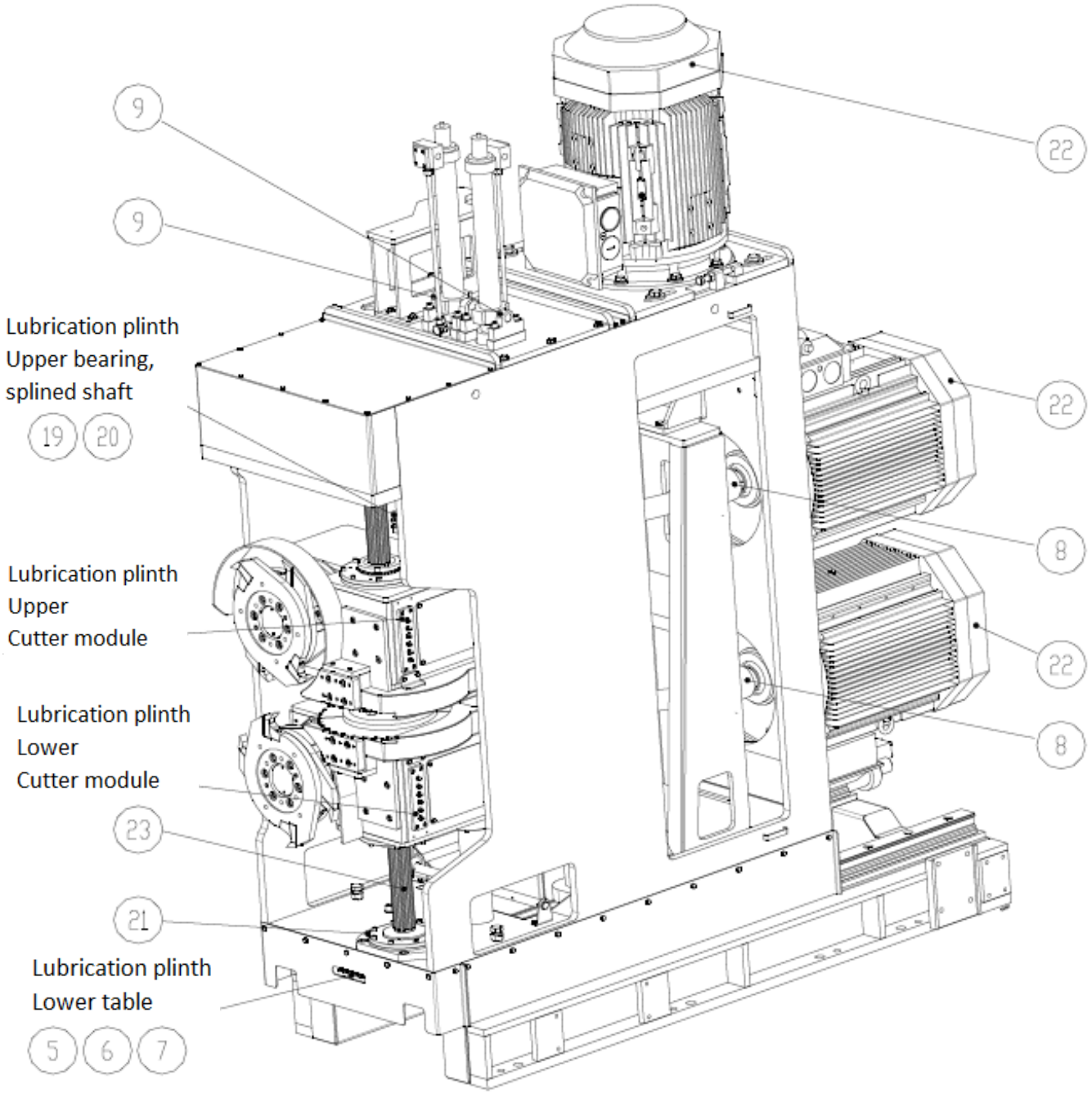
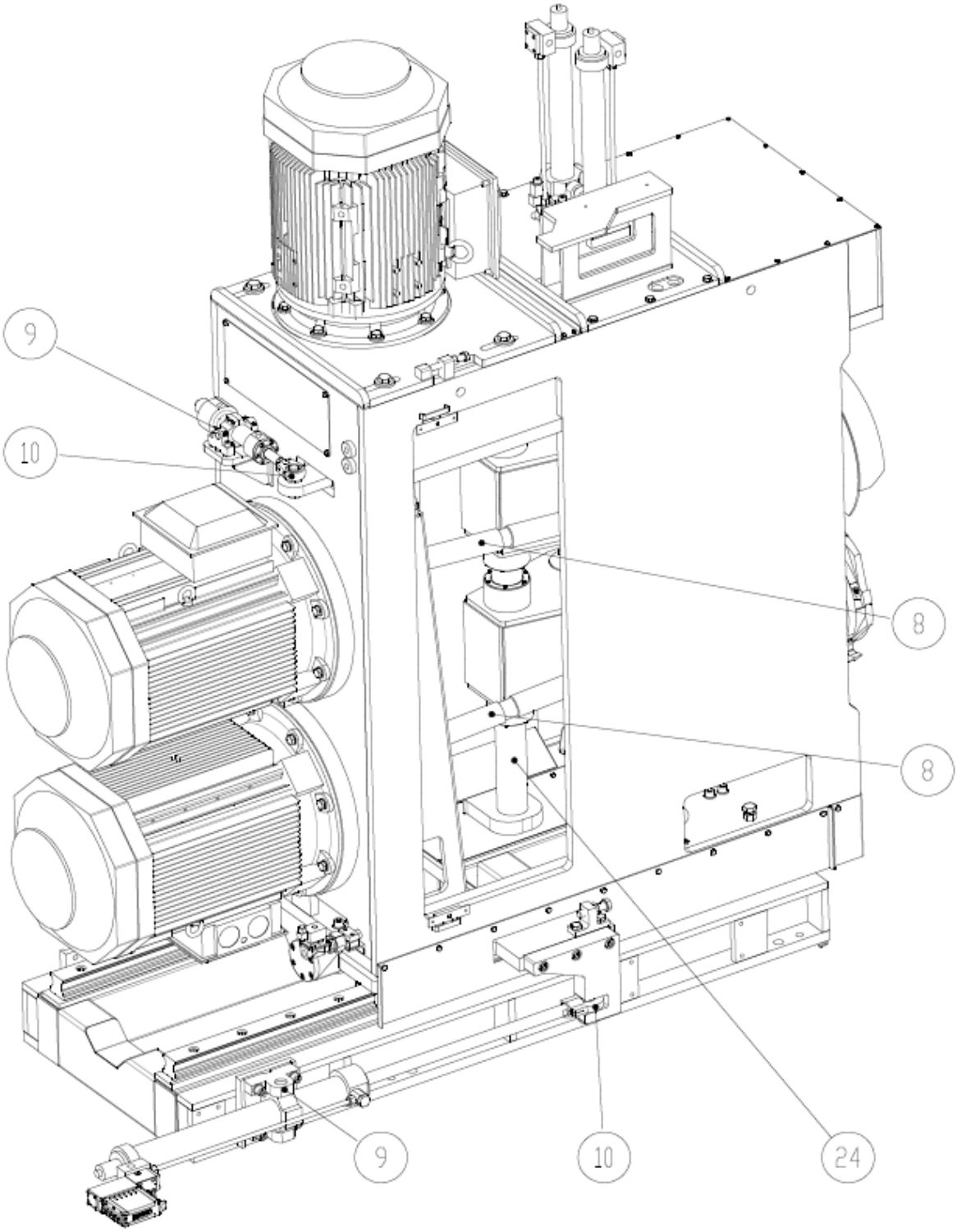
LUBRICATION CHART
P-700