LUBRICATION CHART
QSS-700L

N.B! This instruction applies to production in 1-shift (8 hours/ day)
It shows right side of the machine. Double the number of lubrication points for a whole machine.

Interval	Place of lubrication	**Item**	Number of lubric. points	Lubrication type
2 time / month	Runner blocks Ballscrew / screw Cylinder holder Piston rod bracket	**1** **2** **3** **4**	26 2 8 2	Group V Group V Group V Group V
1 time / month	Bearing, undriven roll Gear motor Control for oilleakage. Change oil after 20000 of operating hours or after 3 years.	**5** **6**	1 2	Group V Group V
1 time / 7 weeks	Motor, spindle drivside For more information of lubrication onn D-side, see separate lubrication instruction.	**7**	2	Group V 100g / bearing
1 time / year or 1/time / 4000h	Motor, spindle fanside (fanside = N-side)	**7**	2	Group V 60g / bearing
1 time / 3 months	Motor, cutting See separate ABB-manual chapter 4.1	**8**	2	Group V 40g / bearing
1 time / month	Runner blocks, cover	**9**	4	Group V
At every time when cutting blades is changed	Bearing unit spindle	**10**	2	Group V
1 time / 2800h	Blade unit, Spindle bearing Notice: Lubrication 10cm3 With an interval of 2800 operating hours. Remove plug and attach lubrication nipple to lubricate. Reattach plug to avoid lubrication mistake.	**11**	2	Group IV Ex. SKF LGLT 2

LUBRICATION CHART
QSS-700L

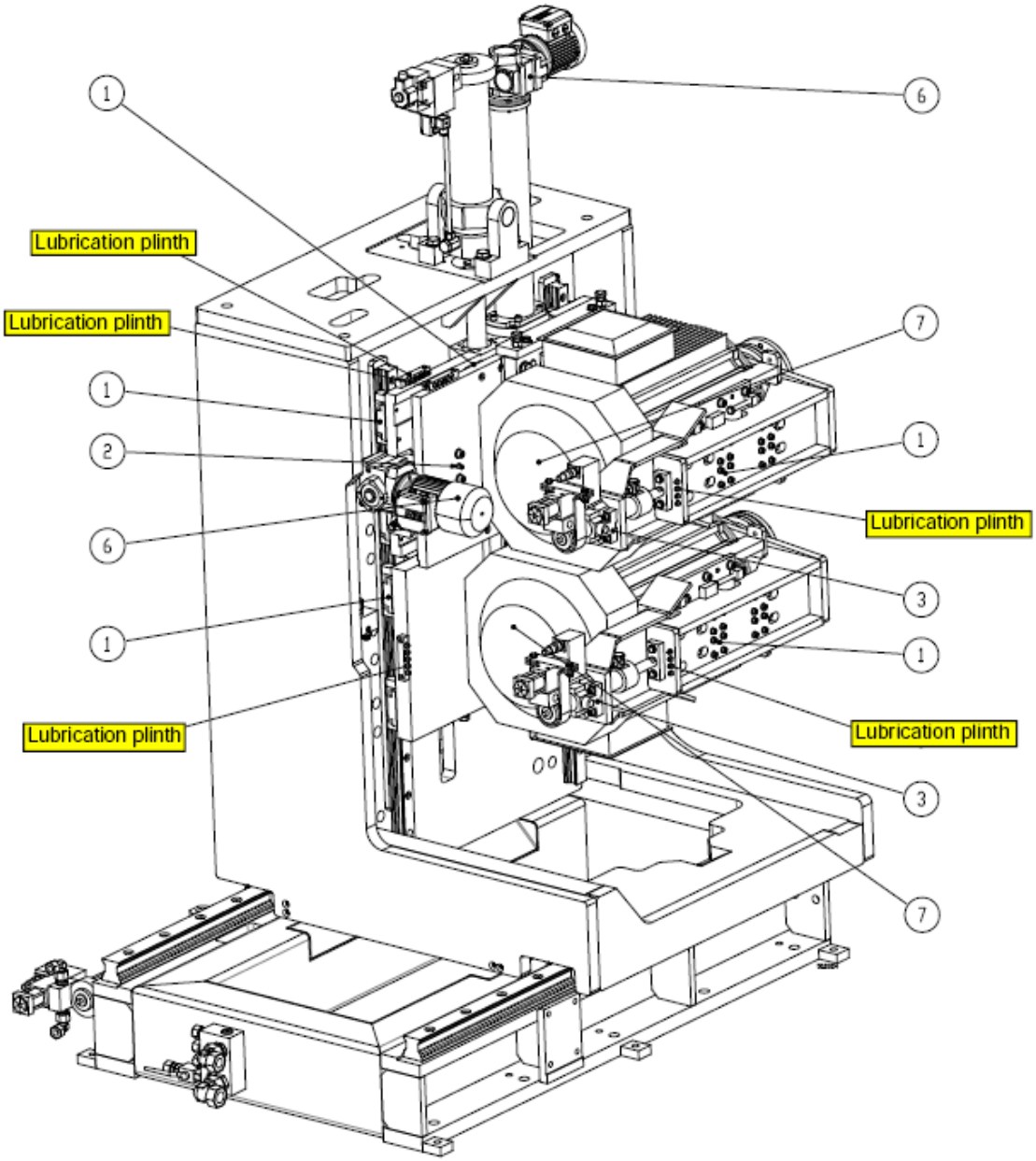

LUBRICATION CHART
QSS-700L

N.B! This instruction applies to production in 1-shift (8 hours/ day)
It shows right side of the machine. Double the number of lubrication points for a whole machine.

Interval	Place of lubrication	**Item**	Number of lubric. points	Lubrication type
2 time / month	Runner blocks Ballscrew / screw Cylinder holder Piston rod bracket	**1** **2** **3** **4**	26 2 8 2	Group V Group V Group V Group V
1 time / month	Bearing, undriven roll Gear motor Control for oilleakage. Change oil after 20000 of operating hours or after 3 years.	**5** **6**	1 2	Group V Group V
1 time / 7 weeks	Motor, spindle drivside For more information of lubrication onn D-side, see separate lubrication instruction.	**7**	2	Group V 100g / bearing
1 time / year or 1/time / 4000h	Motor, spindle fanside (fanside = N-side)	**7**	2	Group V 60g / bearing
1 time / 3 months	Motor, cutting See separate ABB-manual chapter 4.1	**8**	2	Group V 40g / bearing
1 time / month	Runner blocks, cover	**9**	4	Group V
At every time when cutting blades is changed	Bearing unit spindle	**10**	2	Group V
1 time / 2800h	Blade unit, Spindle bearing Notice: Lubrication 10cm3 With an interval of 2800 operating hours. Remove plug and attach lubrication nipple to lubricate. Reattach plug to avoid lubrication mistake.	**11**	2	SKF LGLT 2
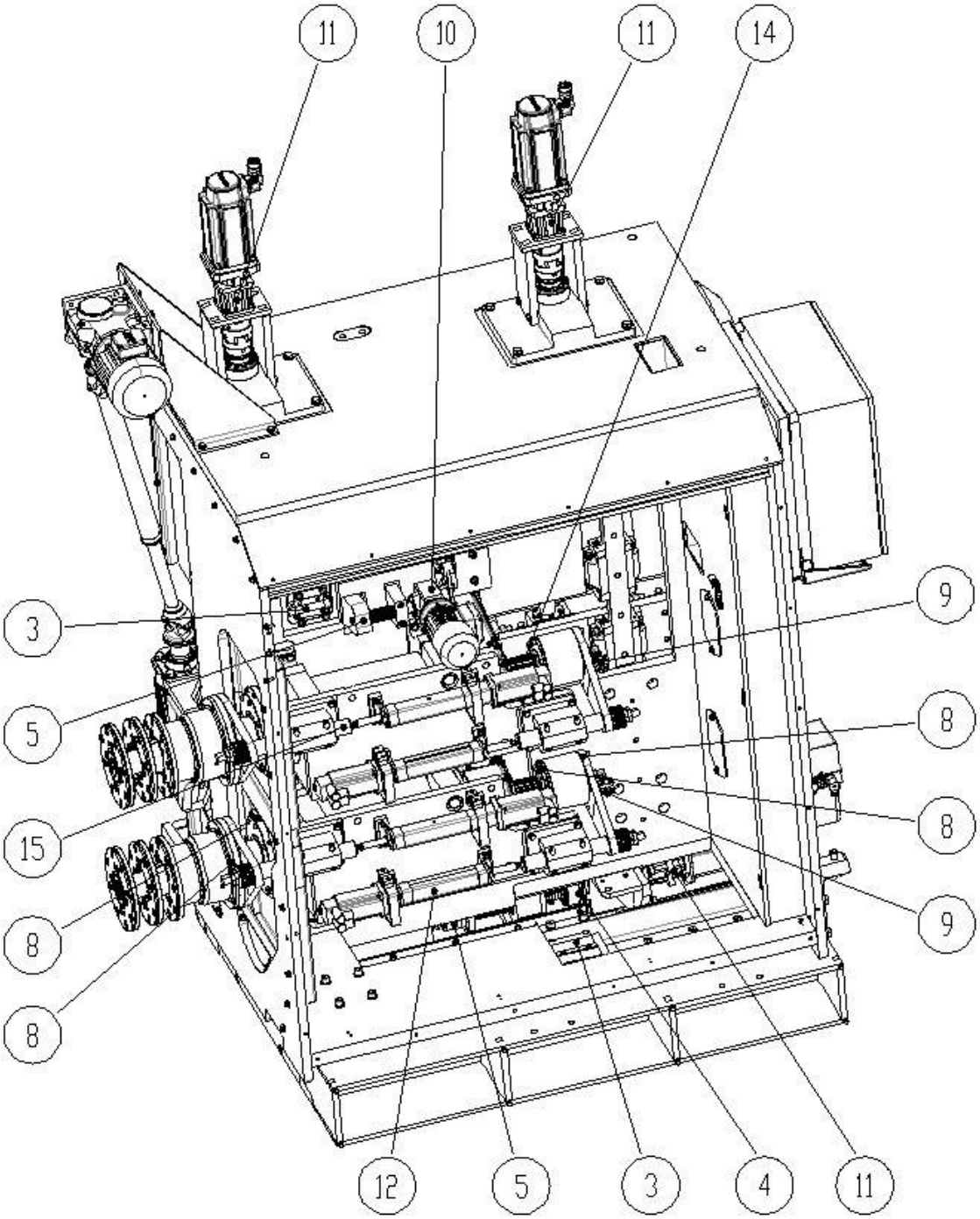
LUBRICATION CHART
QSS-700L