THIS IS ISSUED IN STRICT CONFIDENCE ON CONDITION THAT IT IS NOT USED AS A BASIS FOR MANUFACTURE OR SALE AND THAT IT IS NOT COPIED, REPRINTED OR DISCLOSED TO A THIRD PARTY EITHER WHOLLY OR IN PART WITHOUT THE PRIOR WRITTEN CONSENT OF SABRITEC

REVISIONS

ZONE	LTR	DESCRIPTION	DATE	APPR

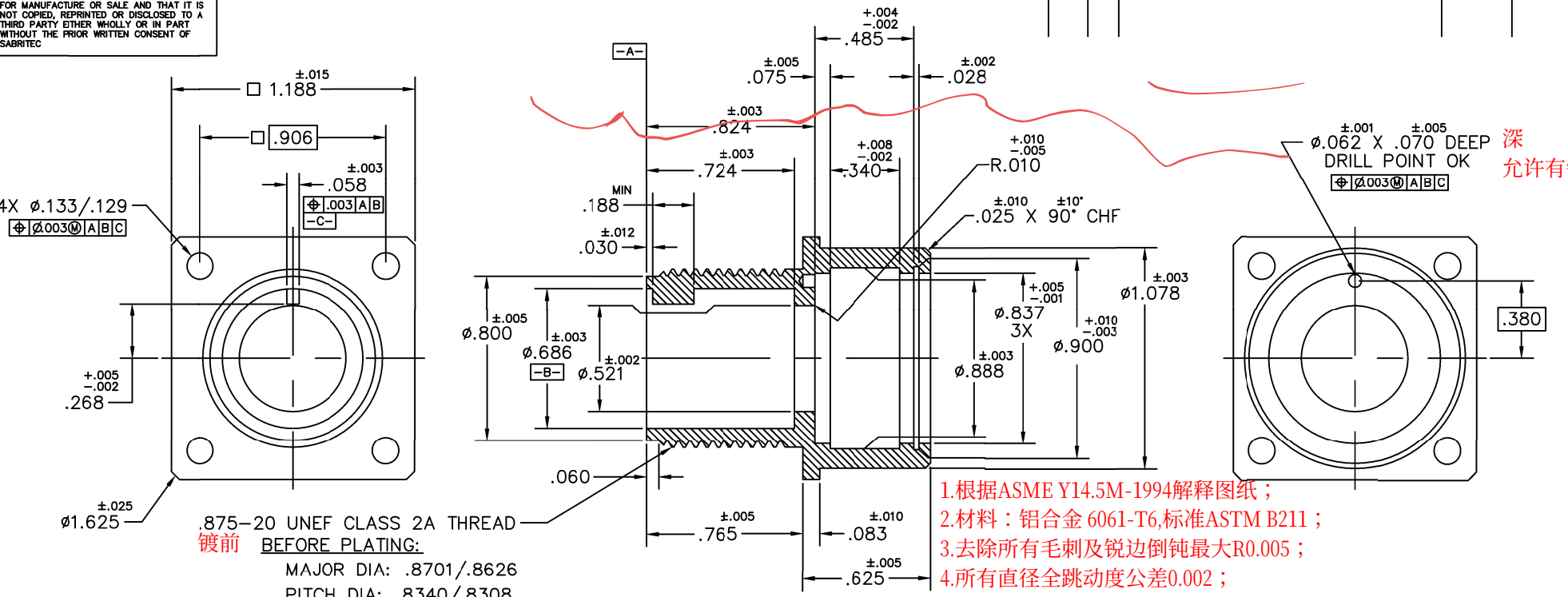

深
允许有钻点

.875–20 UNEF CLASS 2A THREAD

镀前 BEFORE PLATING:

MAJOR DIA: .8701/.8626
PITCH DIA: .8340/.8308
MINOR DIA: .8088/.8013

镀后 AFTER PLATING:

MAJOR DIA: .8737/.8656
PITCH DIA: .8412/.8368
MINOR DIA: .8124/.8043

CHAMFER FIRST THREADS AT 45°
.675 MIN FULL THREAD

1.根据ASME Y14.5M-1994解释图纸；
2.材料：铝合金 6061-T6,标准ASTM B211；
3.去除所有毛刺及锐边倒钝最大R0.005；
4.所有直径全跳动度公差0.002；
5.后处理：TTH电镀，参照程序号1028，厚度0.0015-0.0018；
先镀铜，后镀镍，最外部镀PTFE镍，总镀后0.0015-0.0018；

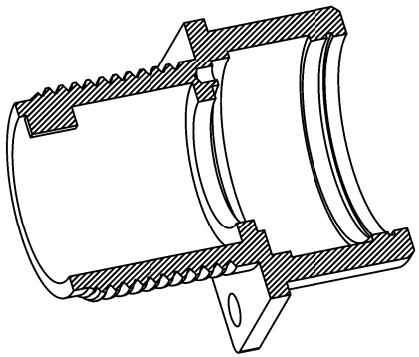

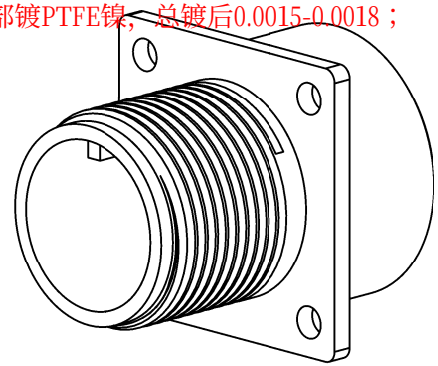

NOTES: (UNLESS OTHERWISE SPECIFIED)
1. INTERPRET DRAWING PER ASME Y14.5M–1994
2. MATERIAL:
   ALUMINUM ALLOY 6061–T6 PER ASTM B211
3. REMOVE ALL BURRS AND BREAK SHARP EDGES R.005 MAX.
4. ALL DIAS SHALL BE ⌀ .002 A B
5. FINISH:
   TTH PLATING PER ICORE PROCESS NUMBER 1028, .0015–.0018 THICK
      EXTERNAL PLATE :NICKEL PTFE
      SECONDARY UNDERPLATE: NICKEL
      PRIMARY UNDERPLATE: COPPER
   TOTAL PLATING BUILDUP: .0015 TO .0018
6. DIMENSIONS APPLY BEFORE PLATING 6.镀前尺寸

CHH
2020.04.13
受控

UNLESS OTHERWISE SPECIFIED DIMENSIONS ARE IN INCHES
.XXX ±.003 .XX ±.01 ANGLES ±1°
THIRD ANGLE PROJECTION

USED ON
117931–3054

APPROVALS	DATE
DRAWN D CYNS	6/1/05
CHECKED	
ENG	
APPROVED	

SABRITEC

TITLE SHELL, MIL–DTL–5015, SIZE 14, RECEPTACLE

SIZE	FSCM CODE	DRAWING NO.
C	58795	100–2905–990

SCALE 1:1 LFN SHEET 1 OF 1