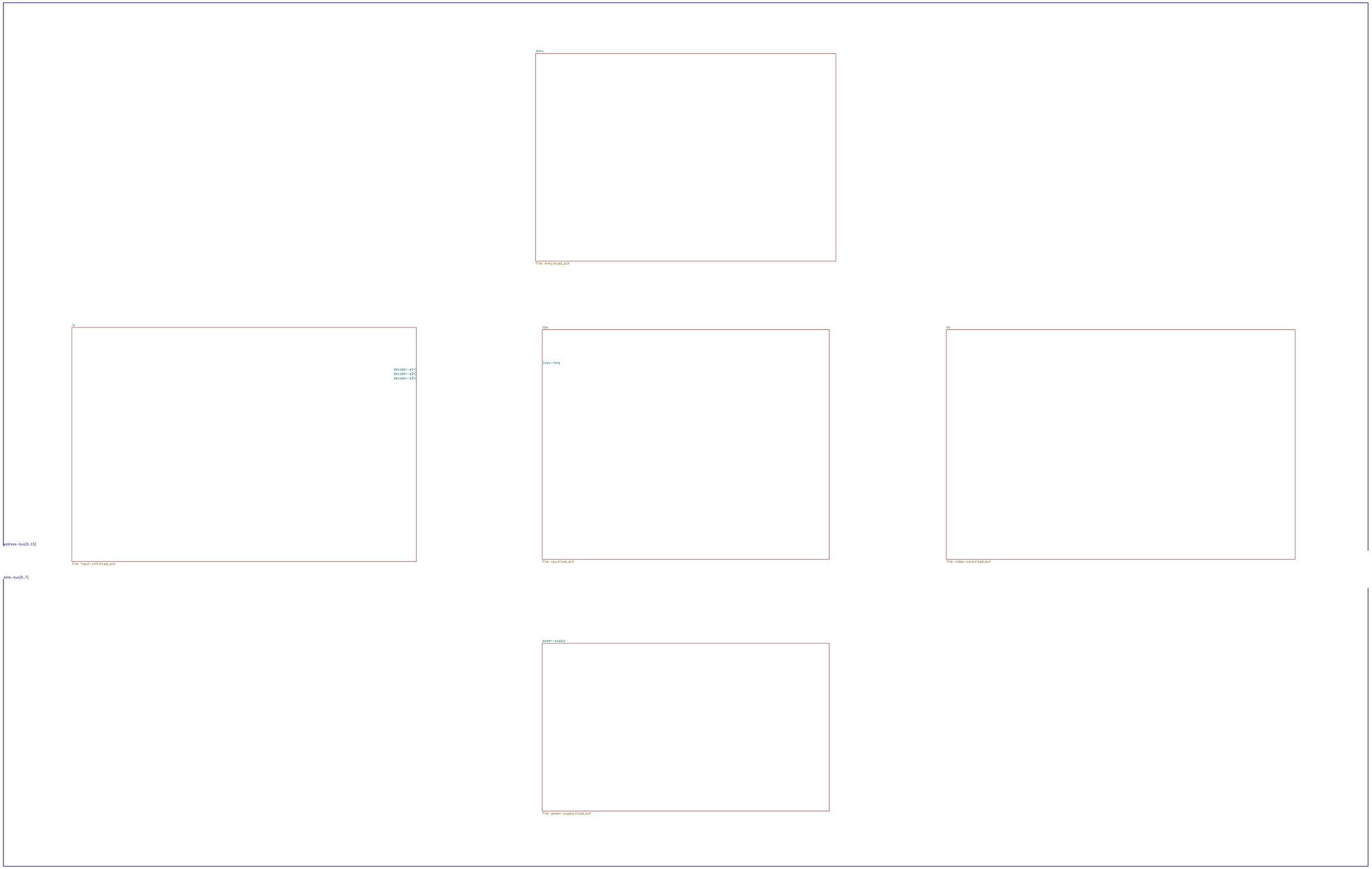

Sheet: /
File: board.kicad_sch
Title:

Size: A1	Date:	**Rev:**
KiCad E.D.A. 9.0.6		Id: 1/7

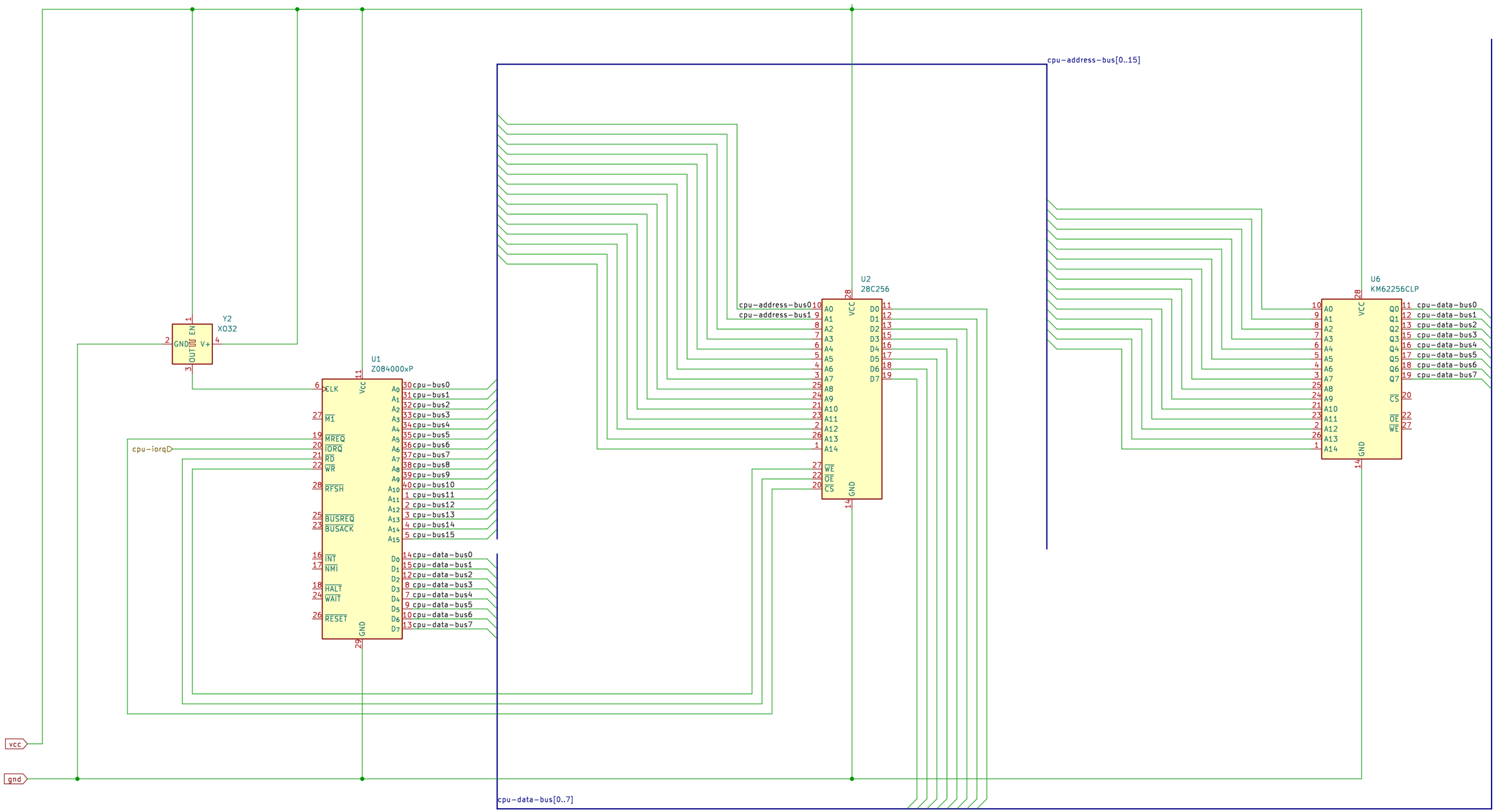

Sheet: /cpu/
File: cpu.kicad_sch

Title:

Size: A3	Date:	Rev:
KiCad E.D.A. 9.0.6		Id: 2/7

gnd

vcc

Sheet: /power-supply/
File: power-supply.kicad_sch

Title:

Size: A4	Date:	**Rev:**
KiCad E.D.A. 9.0.6		Id: 3/7

Sheet: /ou/
File: video-card.kicad_sch

Title:

Size: A4	Date:	**Rev:**
KiCad E.D.A. 9.0.6		Id: 4/7

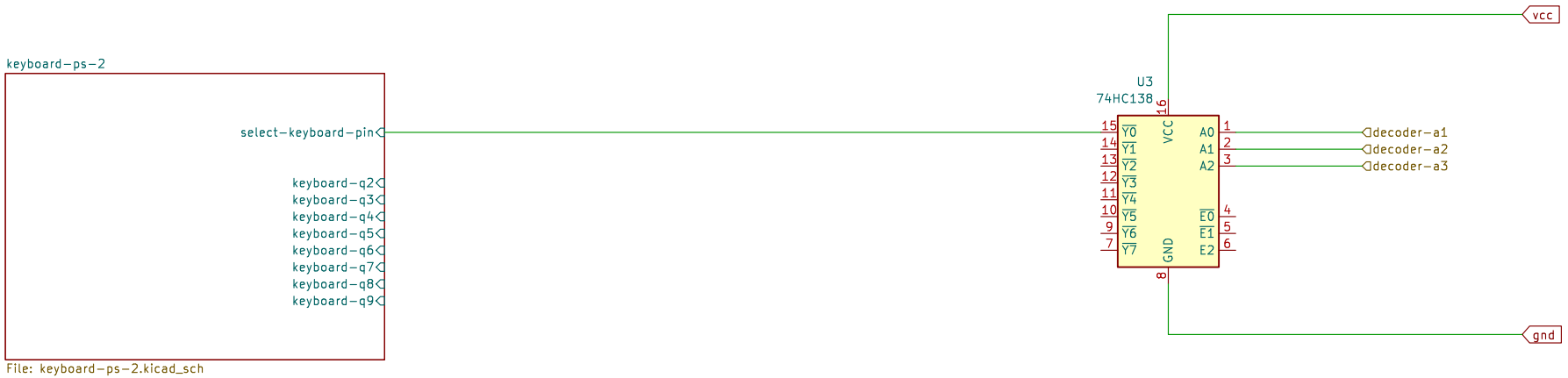

Sheet: /iu/
File: input-unit.kicad_sch

Title:

Size: A4	Date:	Rev:
KiCad E.D.A. 9.0.6		Id: 5/7

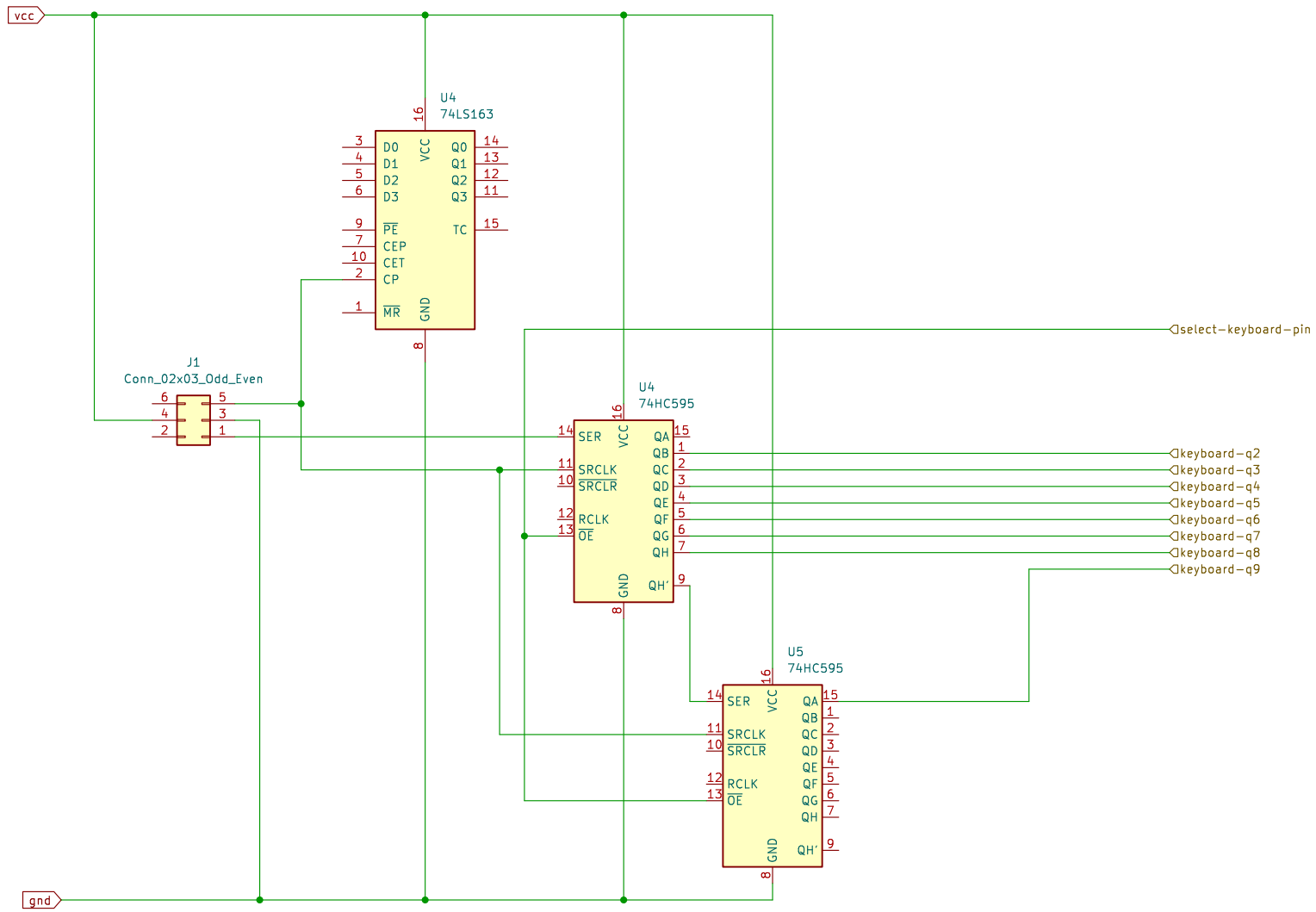

Sheet: /iu/keyboard-ps-2/
File: keyboard-ps-2.kicad_sch

Title:

Size: A4	Date:	**Rev:**
KiCad E.D.A. 9.0.6		Id: 7/7

Sheet: /mmu/
File: mmu.kicad_sch

Title:

Size: A4	Date:	**Rev:**
KiCad E.D.A. 9.0.6		Id: 6/7