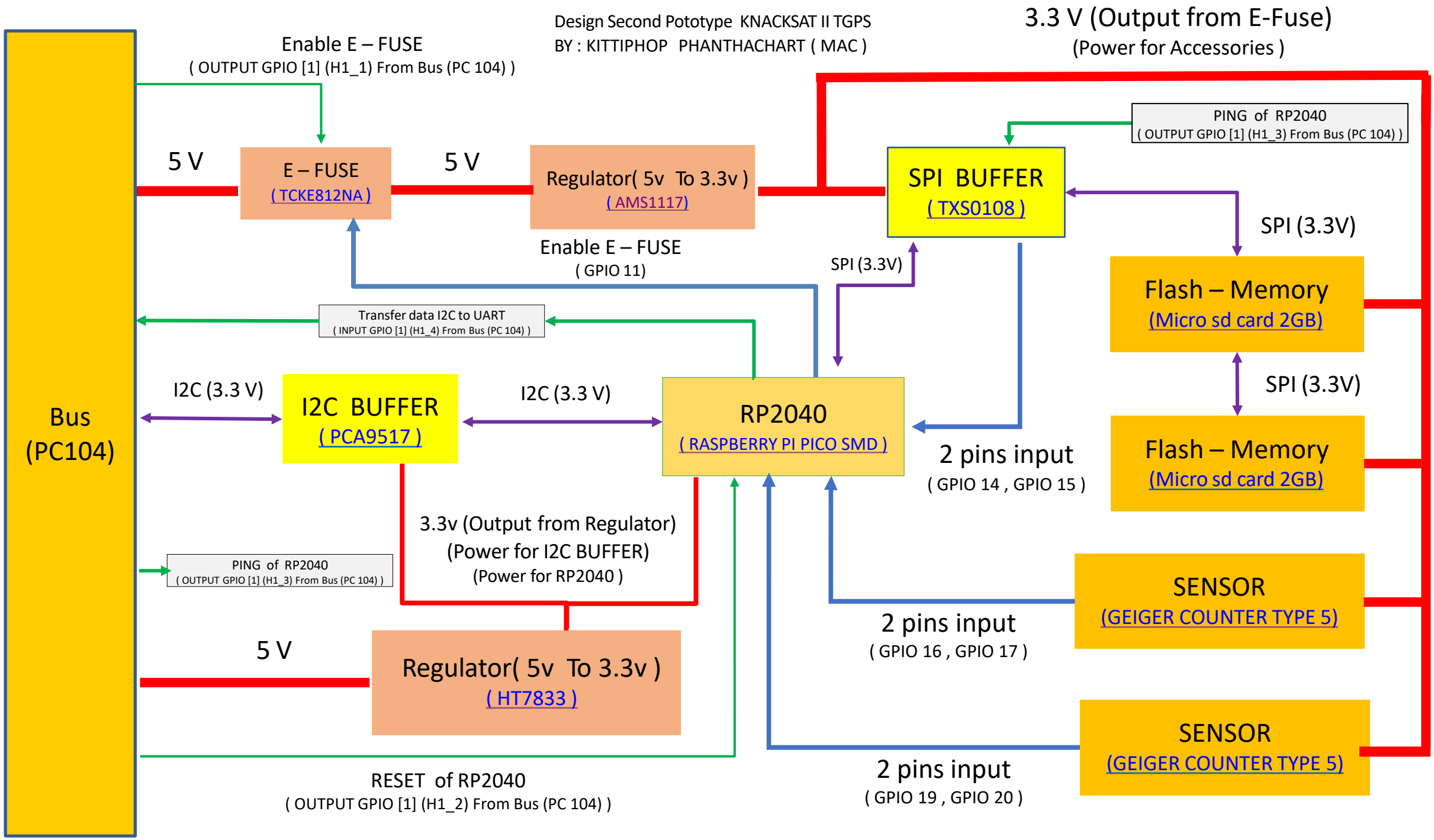
Design Second Pototype KNACKSAT II TGPS
BY : KITTIPHOP PHANTHACHART (MAC)
3.3 V (Output from E-Fuse)
(Power for Accessories)
Enable E – FUSE
(OUTPUT GPIO [1] (H1_1) From Bus (PC 104))
Bus
(PC104)
5 V
E – FUSE
(TCKE812NA)
5 V
Regulator(5v To 3.3v)
(AMS1117)
Enable E – FUSE
(GPIO 11)
PING of RP2040
(OUTPUT GPIO [1] (H1_3) From Bus (PC 104))
SPI BUFFER
(TXS0108)
SPI (3.3V)
SPI (3.3V)
Flash – Memory
(Micro sd card 2GB)
SPI (3.3V)
Flash – Memory
(Micro sd card 2GB)
Transfer data I2C to UART
(INPUT GPIO [1] (H1_4) From Bus (PC 104))
I2C (3.3 V)
I2C BUFFER
(PCA9517)
I2C (3.3 V)
RP2040
(RASPBERRY PI PICO SMD)
2 pins input
(GPIO 14 , GPIO 15)
3.3v (Output from Regulator)
(Power for I2C BUFFER)
(Power for RP2040)
PING of RP2040
(OUTPUT GPIO [1] (H1_3) From Bus (PC 104))
SENSOR
(GEIGER COUNTER TYPE 5)
2 pins input
(GPIO 16 , GPIO 17)
5 V
Regulator(5v To 3.3v)
(HT7833)
SENSOR
(GEIGER COUNTER TYPE 5)
2 pins input
(GPIO 19 , GPIO 20)
RESET of RP2040
(OUTPUT GPIO [1] (H1_2) From Bus (PC 104))