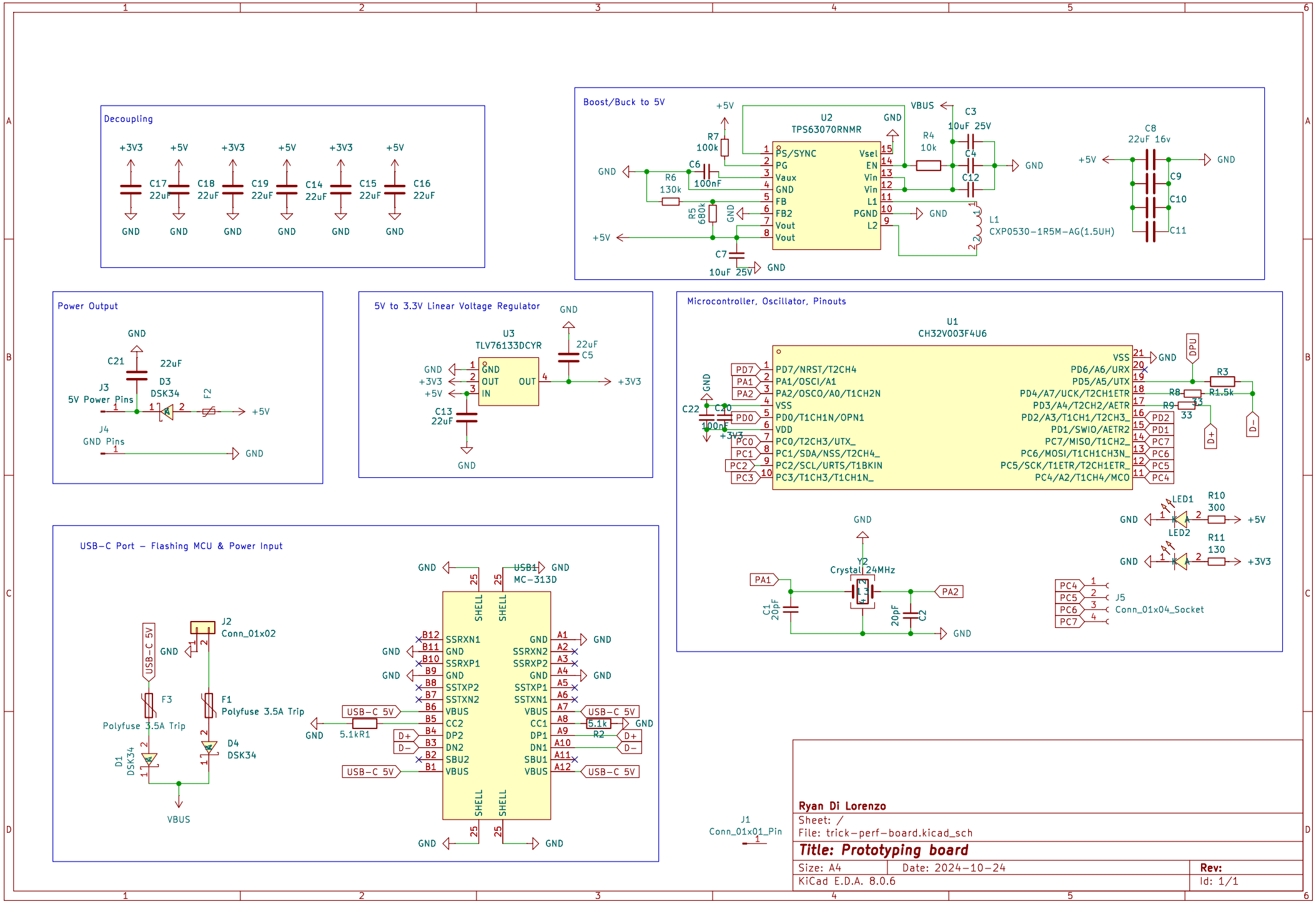
Decoupling
+3V3
+5V
C17 22uF
C18 22uF
C19 22uF
C14 22uF
C15 22uF
C16 22uF
GND
Boost/Buck to 5V
U2
TPS63070RNMR
PS/SYNC
PG
Vaux
GND
FB
FB2
Vout
Vsel
EN
Vin
L1
PGND
L2
VBUS
C3 10uF 25V
C4
C12
R4 10k
R7 100k
R6 130k
R5 680k
C6 100nF
C7 10uF 25V
L1 CXP0530-1R5M-AG(1.5UH)
C8 22uF 16v
C9
C10
C11
Power Output
C21 22uF
J3 5V Power Pins
D3 DSK34
F2
J4 GND Pins
5V to 3.3V Linear Voltage Regulator
U3
TLV76133DCYR
GND
OUT
IN
C5 22uF
C13 22uF
+3V3
Microcontroller, Oscillator, Pinouts
U1
CH32V003F4U6
PD7/NRST/T2CH4
PA1/OSCI/A1
PA2/OSCO/A0/T1CH2N
VSS
PD0/T1CH1N/OPN1
VDD
PC0/T2CH3/UTX_
PC1/SDA/NSS/T2CH4_
PC2/SCL/URTS/T1BKIN
PC3/T1CH3/T1CH1N_
PD6/A6/URX
PD5/A5/UTX
PD4/A7/UCK/T2CH1ETR
PD3/A4/T2CH2/AETR
PD2/A3/T1CH1/T2CH3_
PD1/SWIO/AETR2
PC7/MISO/T1CH2_
PC6/MOSI/T1CH1CH3N_
PC5/SCK/T1ETR/T2CH1ETR_
PC4/A2/T1CH4/MCO
DPU
R3 1.5k
R8 33
R9 33
D+
D-
C20 100nF
C22
LED1
LED2
R10 300
R11 130
Y2 Crystal 24MHz
C1 20pF
C2 20pF
J5 Conn_01x04_Socket
USB-C Port - Flashing MCU & Power Input
J2 Conn_01x02
F3 Polyfuse 3.5A Trip
F1 Polyfuse 3.5A Trip
D1 DSK34
D4 DSK34
VBUS
USB-C 5V
5.1kR1
5.1k R2
USB1 MC-313D
SSRXN1
SSRXP1
SSTXP2
SSTXN2
CC2
DP2
DN2
SBU2
SSRXN2
SSRXP2
SSTXP1
SSTXN1
CC1
DP1
DN1
SBU1
SHELL
J1 Conn_01x01_Pin
Ryan Di Lorenzo
Sheet: /
File: trick-perf-board.kicad_sch
Title: Prototyping board
Size: A4
Date: 2024-10-24
Rev:
KiCad E.D.A. 8.0.6
Id: 1/1