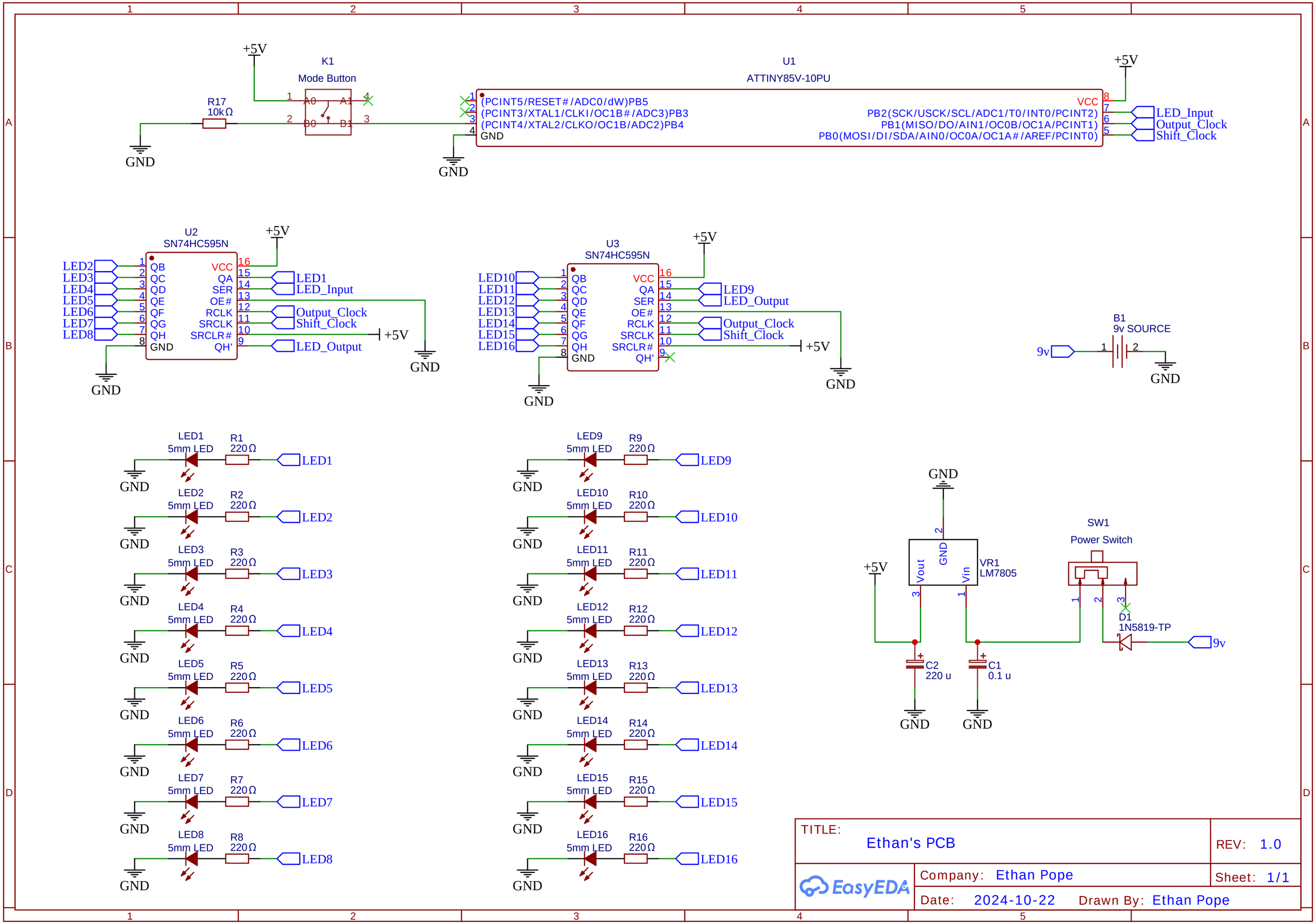

TITLE: Ethan's PCB	REV: 1.0
Company: Ethan Pope	Sheet: 1/1
Date: 2024-10-22 Drawn By: Ethan Pope	