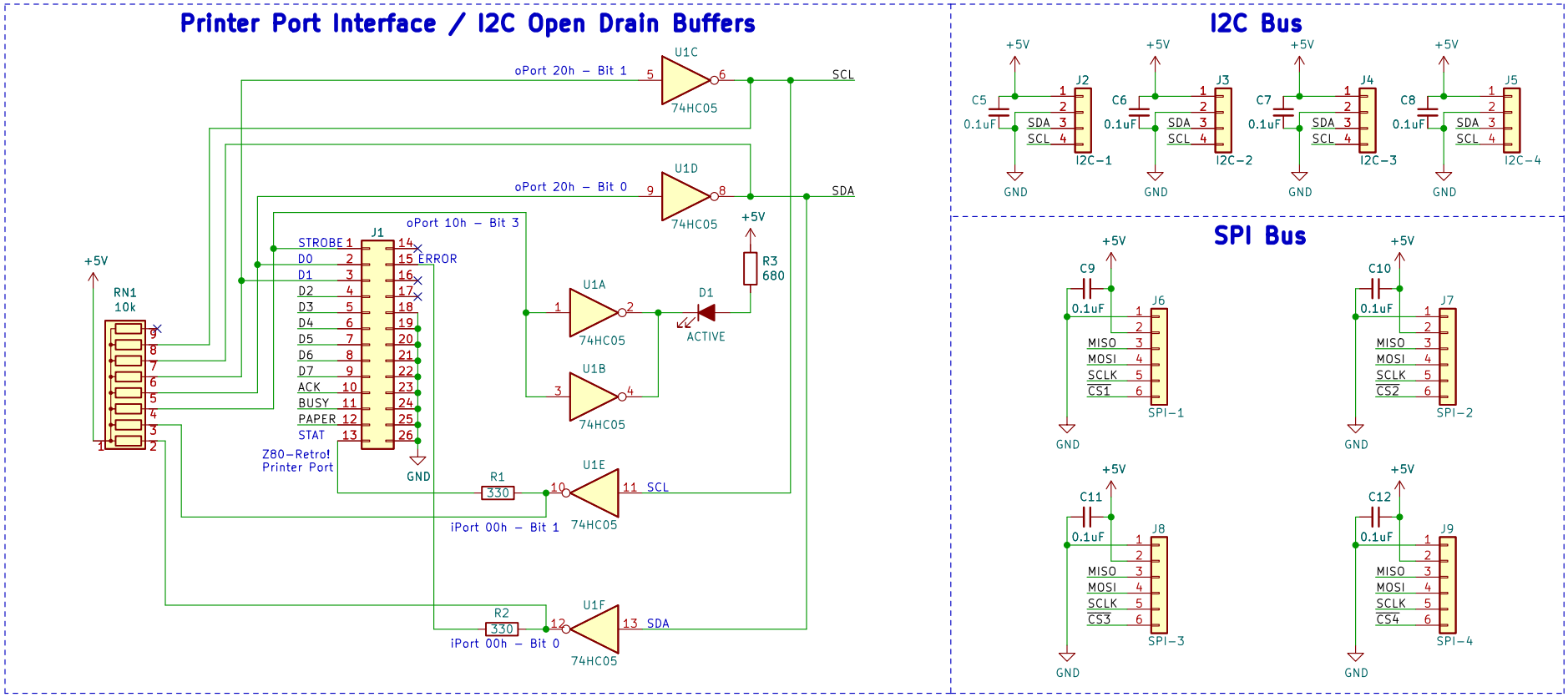

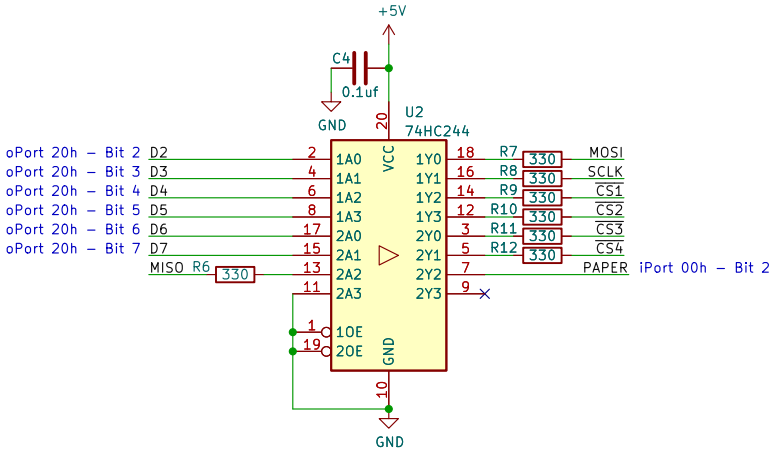

SPI Buffer

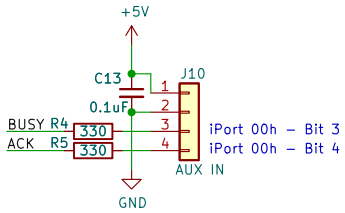

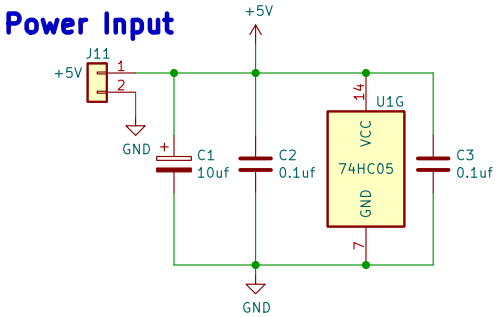

Z80-Retro! Parallel Port to I2C/SPI Master Interface

KRSynthWorx

Sheet: /

File: i2c-adapter.kicad_sch

Title: I2C/SPI-Adapter

Size: A	Date: 10-24-2022	**Rev: 2.0**
KiCad E.D.A. kicad 6.0.11-2627ca5db0~126~ubuntu22.04.1		Id: 1/1