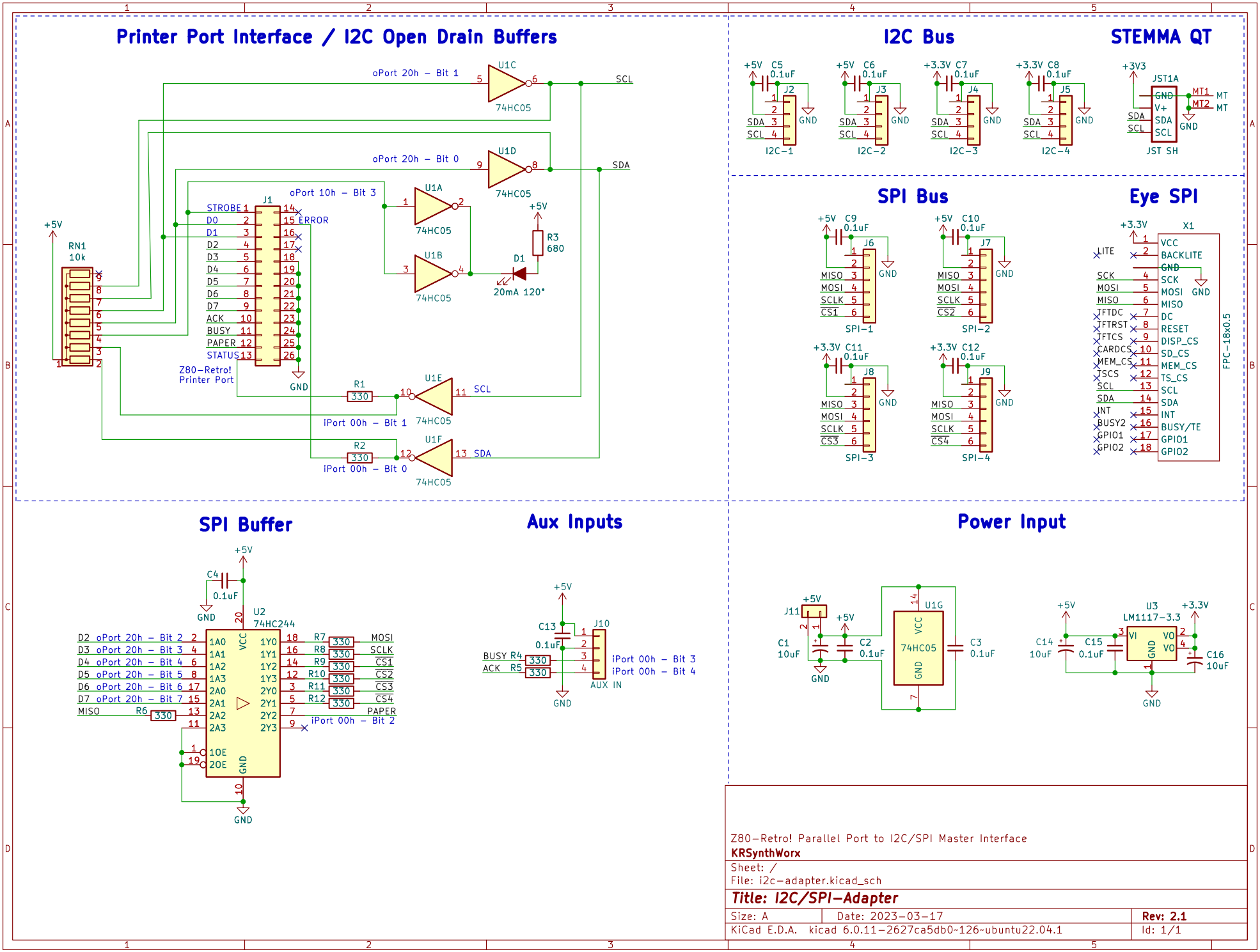
Printer Port Interface / I2C Open Drain Buffers
oPort 20h – Bit 1
oPort 20h – Bit 0
oPort 10h – Bit 3
U1C
U1D
U1A
U1B
U1E
U1F
74HC05
SCL
SDA
+5V
RN1
10k
J1
STROBE
D0
D1
D2
D3
D4
D5
D6
D7
ACK
BUSY
PAPER
STATUS
ERROR
Z80-Retro!
Printer Port
GND
R1
330
R2
330
iPort 00h – Bit 1
iPort 00h – Bit 0
R3
680
D1
20mA 120°
I2C Bus
STEMMA QT
C5
C6
C7
C8
0.1uF
J2
J3
J4
J5
I2C-1
I2C-2
I2C-3
I2C-4
+3V3
JST1A
MT1
MT2
MT
JST SH
SPI Bus
Eye SPI
C9
C10
C11
C12
J6
J7
J8
J9
SPI-1
SPI-2
SPI-3
SPI-4
MISO
MOSI
SCLK
CS1
CS2
CS3
CS4
X1
FPC-18x0.5
VCC
BACKLITE
LITE
SCK
DC
RESET
DISP_CS
SD_CS
MEM_CS
TS_CS
INT
BUSY/TE
GPIO1
GPIO2
TFTDC
TFTRST
TFTCS
CARDCS
TSCS
BUSY2
SPI Buffer
Aux Inputs
Power Input
C4
U2
74HC244
D2 oPort 20h – Bit 2
D3 oPort 20h – Bit 3
D4 oPort 20h – Bit 4
D5 oPort 20h – Bit 5
D6 oPort 20h – Bit 6
D7 oPort 20h – Bit 7
MISO
R6
R7
R8
R9
R10
R11
R12
iPort 00h – Bit 2
C13
J10
BUSY R4
ACK R5
iPort 00h – Bit 3
iPort 00h – Bit 4
AUX IN
J11
C1
10uF
C2
0.1uF
C3
0.1uF
U1G
74HC05
C14
10uF
C15
0.1uF
U3
LM1117-3.3
C16
10uF
+3.3V
Z80-Retro! Parallel Port to I2C/SPI Master Interface
KRSynthWorx
Sheet: /
File: i2c-adapter.kicad_sch
Title: I2C/SPI-Adapter
Size: A
Date: 2023-03-17
Rev: 2.1
KiCad E.D.A. kicad 6.0.11-2627ca5db0~126~ubuntu22.04.1
Id: 1/1