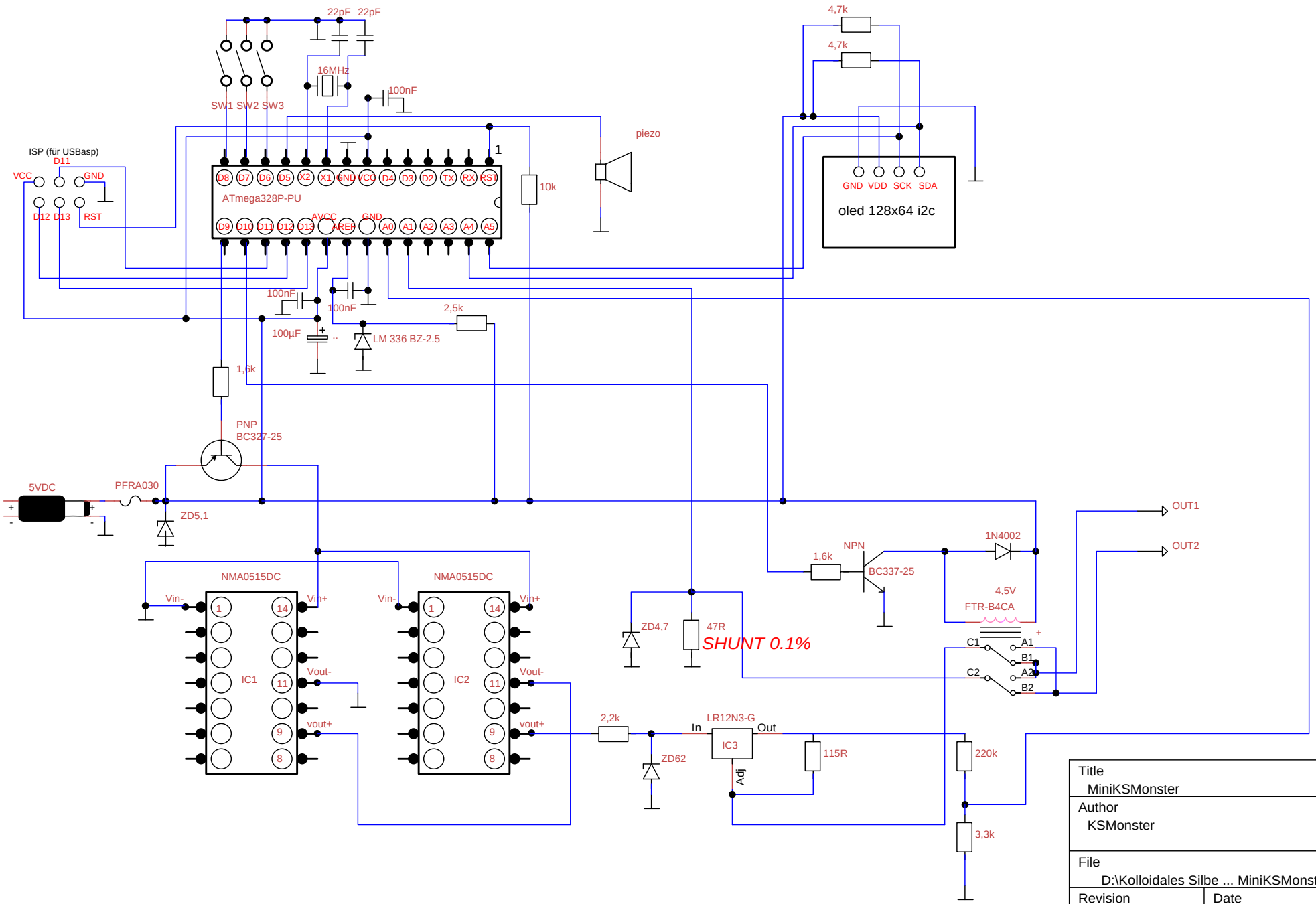

Title MiniKSMonster		
Author KSMonster		
File D:\Kolloidales Silbe ... MiniKSMonster2.0.dsn		Document
Revision 2.0	Date 03. Januar 2020	Sheets 1 of 1