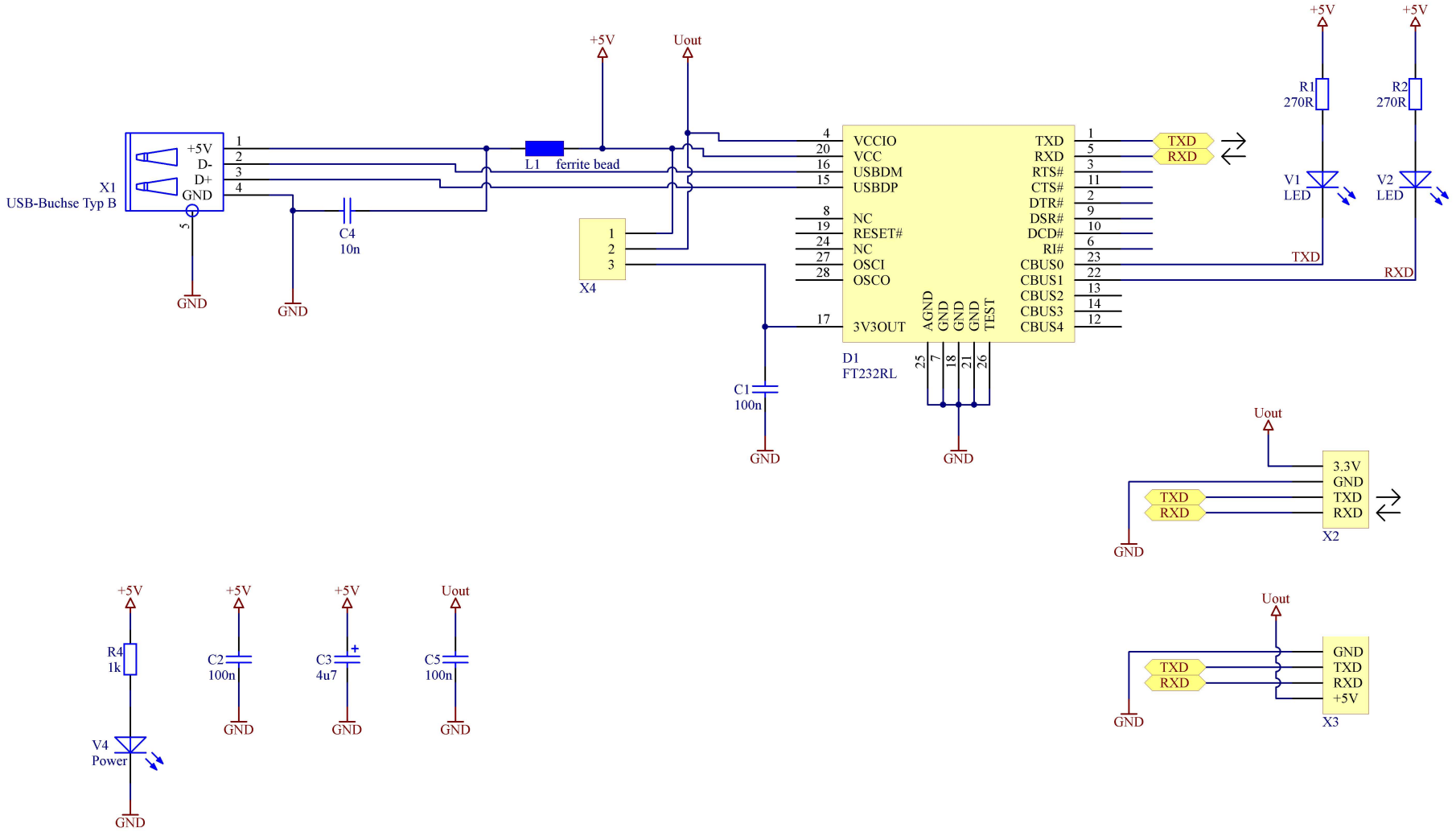

Title		
USB to RS232 Converter		
Size: A4	Number: Diplomarbeit 2017/18 4BHEL	Revision: Ver. 2.1
Date: 22.12.2017	Sheet 1 of 1	
File: D:\Desktop\..\ARM_USB_TO_RS232.SchDoc	Drawn By: Schuh Kevin	

HTL Hollabrunn