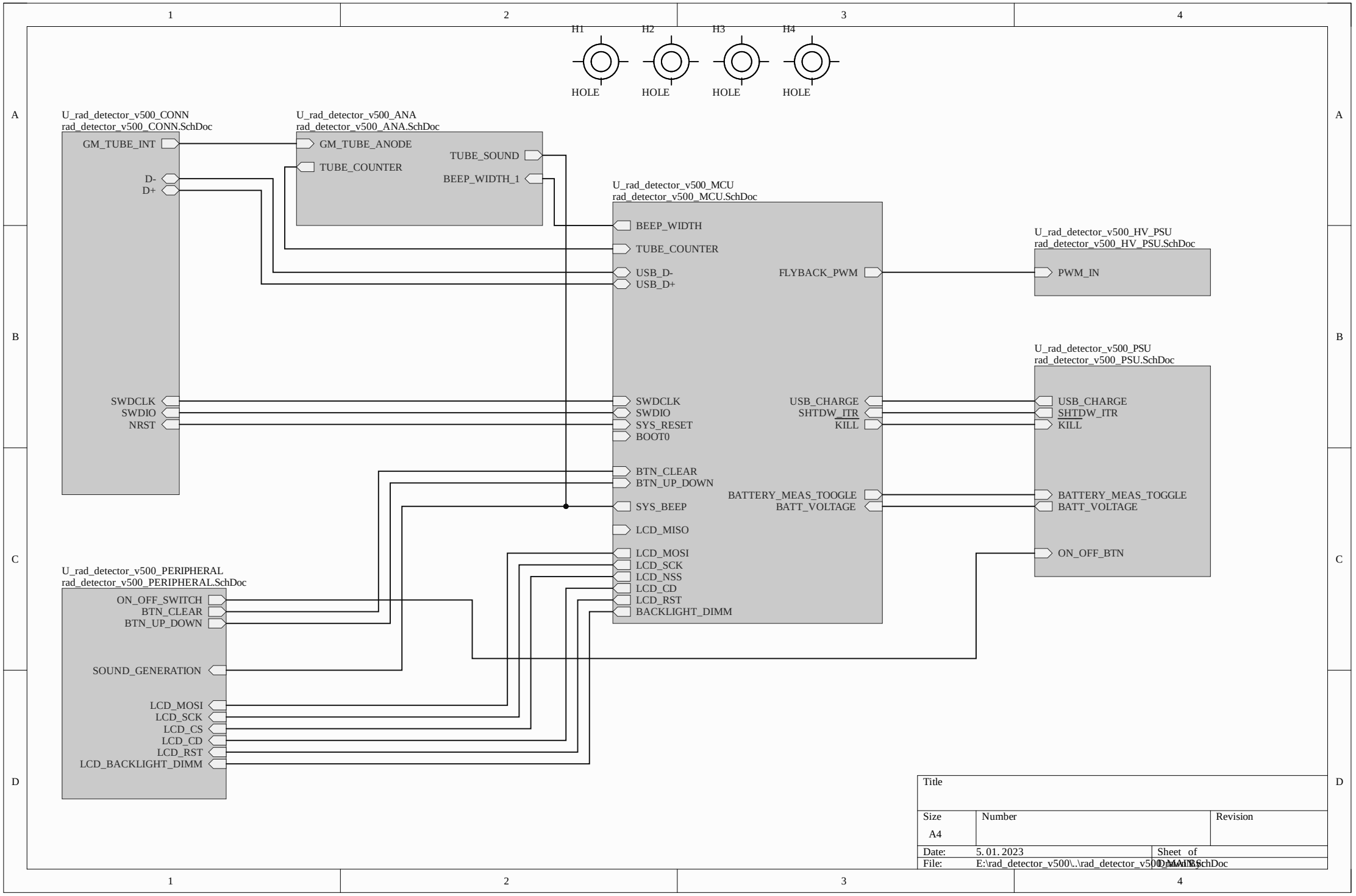
H1
H2
H3
H4
HOLE
HOLE
HOLE
HOLE
U_rad_detector_v500_CONN
rad_detector_v500_CONN.SchDoc
GM_TUBE_INT
D-
D+
SWDCLK
SWDIO
NRST
U_rad_detector_v500_ANA
rad_detector_v500_ANA.SchDoc
GM_TUBE_ANODE
TUBE_COUNTER
TUBE_SOUND
BEEP_WIDTH_1
U_rad_detector_v500_MCU
rad_detector_v500_MCU.SchDoc
BEEP_WIDTH
TUBE_COUNTER
USB_D-
USB_D+
SWDCLK
SWDIO
SYS_RESET
BOOT0
BTN_CLEAR
BTN_UP_DOWN
SYS_BEEP
LCD_MISO
LCD_MOSI
LCD_SCK
LCD_NSS
LCD_CD
LCD_RST
BACKLIGHT_DIMM
FLYBACK_PWM
USB_CHARGE
SHTDW_ITR
KILL
BATTERY_MEAS_TOOGLE
BATT_VOLTAGE
U_rad_detector_v500_HV_PSU
rad_detector_v500_HV_PSU.SchDoc
PWM_IN
U_rad_detector_v500_PSU
rad_detector_v500_PSU.SchDoc
USB_CHARGE
SHTDW_ITR
KILL
BATTERY_MEAS_TOGGLE
BATT_VOLTAGE
ON_OFF_BTN
U_rad_detector_v500_PERIPHERAL
rad_detector_v500_PERIPHERAL.SchDoc
ON_OFF_SWITCH
BTN_CLEAR
BTN_UP_DOWN
SOUND_GENERATION
LCD_MOSI
LCD_SCK
LCD_CS
LCD_CD
LCD_RST
LCD_BACKLIGHT_DIMM
Title
Size
A4
Number
Revision
Date:
5. 01. 2023
Sheet of
File:
E:\rad_detector_v500\..\rad_detector_v500_MAIN.SchDoc
Drawn By:

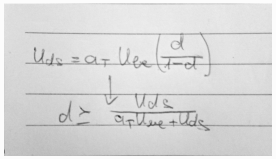

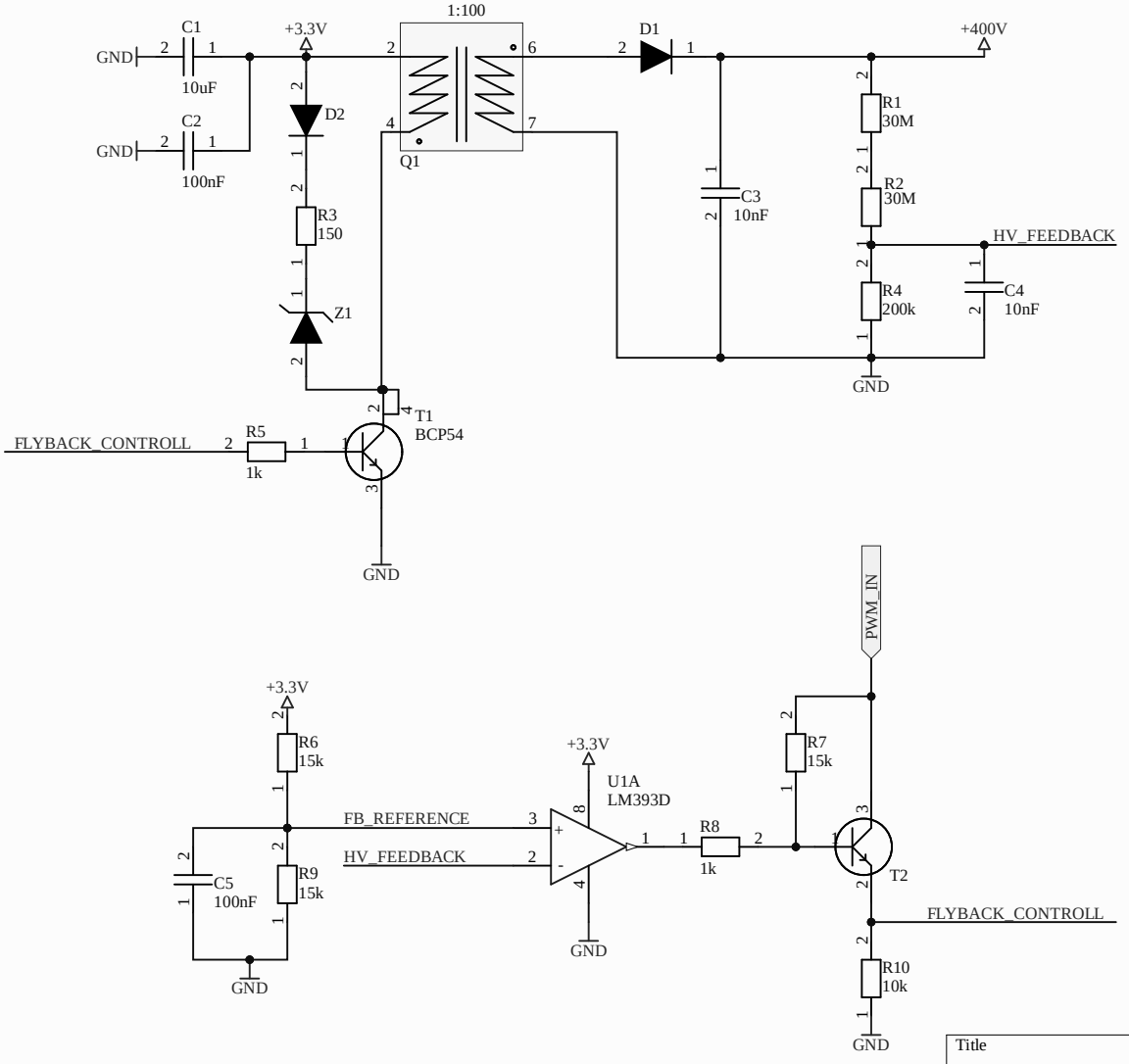

Title		
Size A4	Number	Revision
Date: 5. 01. 2023	Sheet of	
File: E:\rad_detector_v500\..\rad_detector_v500\HV_PSU.SchDoc	Drawn By:	

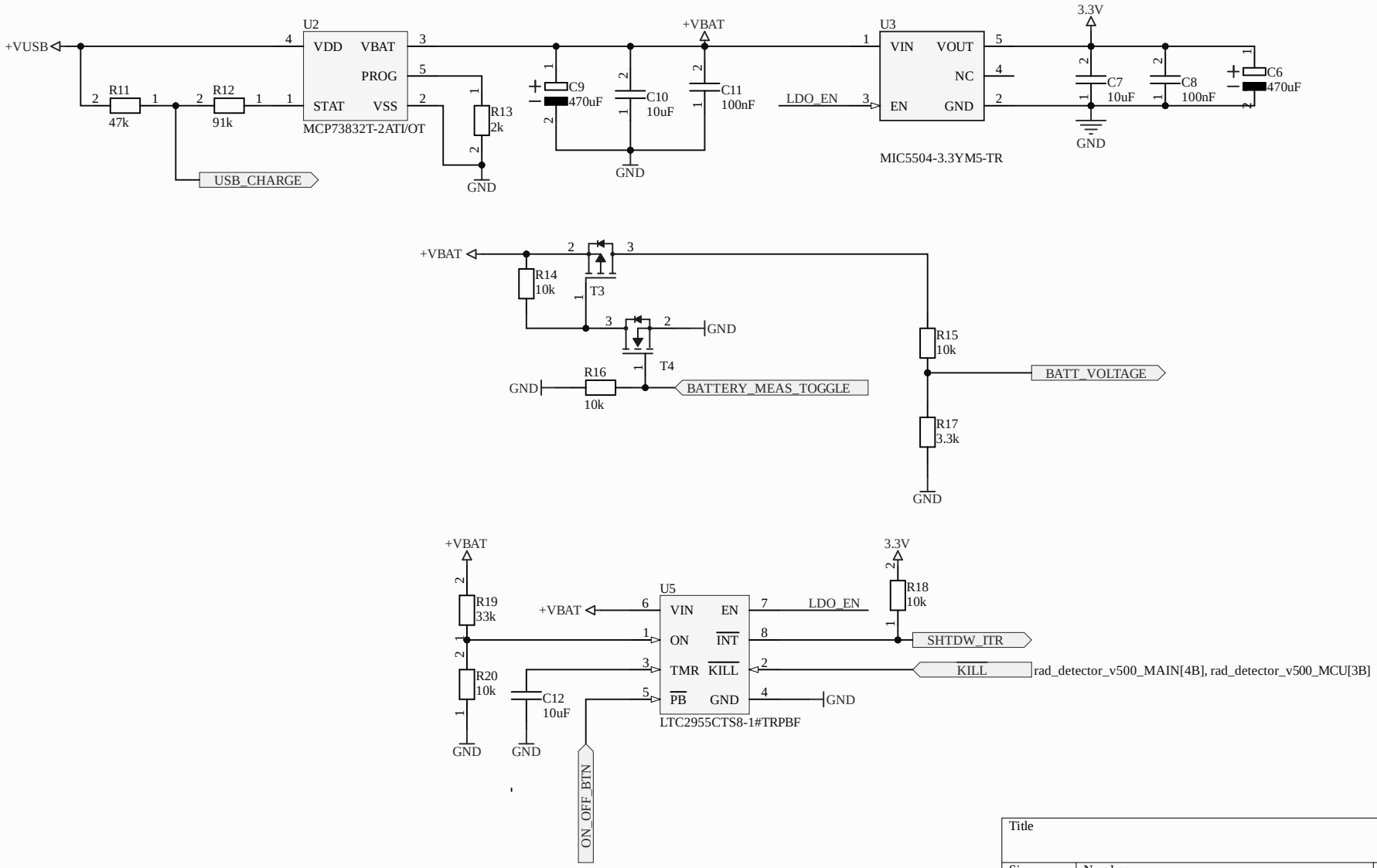

Title		
Size: A4	Number	Revision
Date: 5. 01. 2023	Sheet of	
File: E:\rad_detector_v500\..\rad_detector_v500_PSU.SchDoc	Drawn By:	

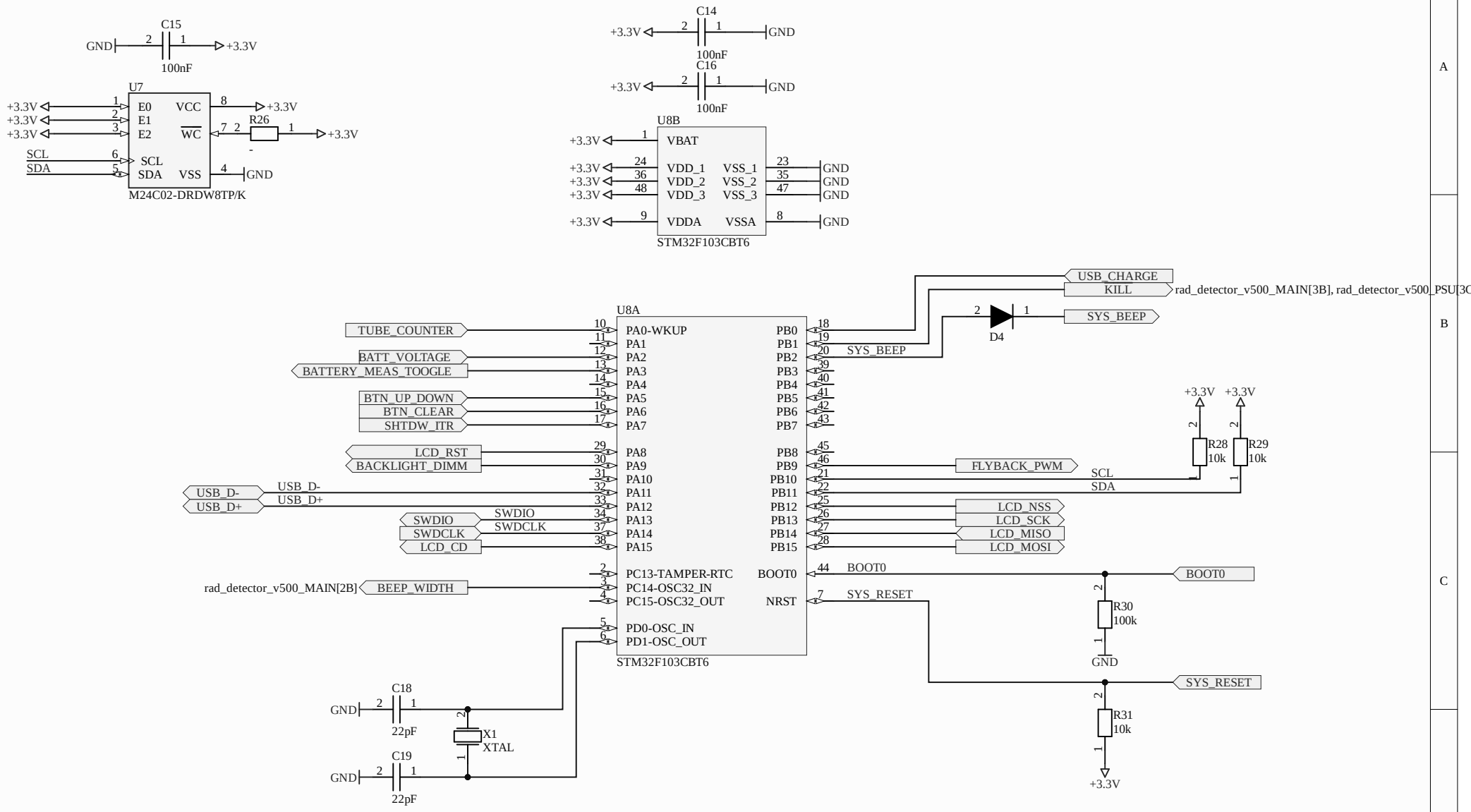
C15
GND
100nF
+3.3V
U7
E0
E1
E2
WC
VCC
SCL
SDA
VSS
R26
M24C02-DRDW8TP/K
C14
C16
U8B
VBAT
VDD_1
VDD_2
VDD_3
VDDA
VSS_1
VSS_2
VSS_3
VSSA
STM32F103CBT6
U8A
PA0-WKUP
PA1
PA2
PA3
PA4
PA5
PA6
PA7
PA8
PA9
PA10
PA11
PA12
PA13
PA14
PA15
PB0
PB1
PB2
PB3
PB4
PB5
PB6
PB7
PB8
PB9
PB10
PB11
PB12
PB13
PB14
PB15
PC13-TAMPER-RTC
PC14-OSC32_IN
PC15-OSC32_OUT
PD0-OSC_IN
PD1-OSC_OUT
BOOT0
NRST
TUBE_COUNTER
BATT_VOLTAGE
BATTERY_MEAS_TOOGLE
BTN_UP_DOWN
BTN_CLEAR
SHTDW_ITR
LCD_RST
BACKLIGHT_DIMM
USB_D-
USB_D+
SWDIO
SWDCLK
LCD_CD
BEEP_WIDTH
rad_detector_v500_MAIN[2B]
USB_CHARGE
KILL
rad_detector_v500_MAIN[3B], rad_detector_v500_PSU[3C
SYS_BEEP
D4
FLYBACK_PWM
SCL
SDA
LCD_NSS
LCD_SCK
LCD_MISO
LCD_MOSI
R28
10k
R29
10k
R30
100k
R31
10k
SYS_RESET
C18
C19
22pF
X1
XTAL
Title
Size
A4
Number
Revision
Date:
5. 01. 2023
Sheet of
File:
E:\rad_detector_v500\..\rad_detector_v500_MAIN.SchDoc

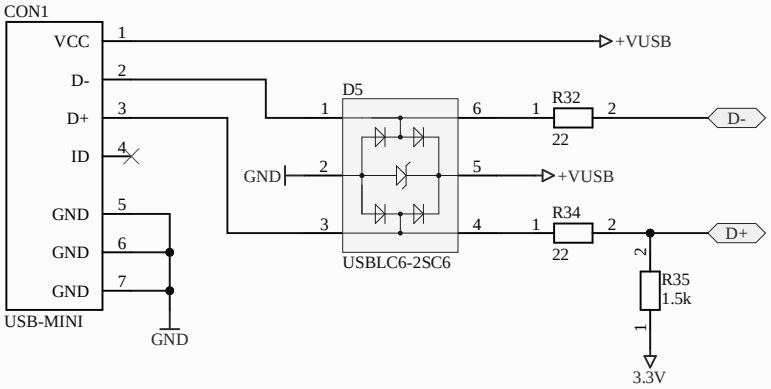

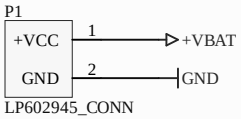

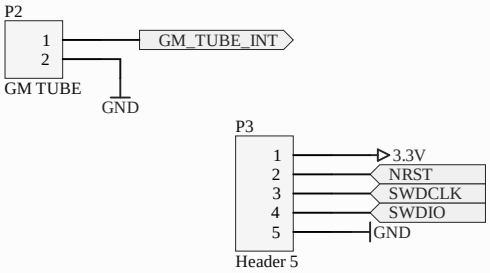

Title		
Size: A4	Number	Revision
Date: 5. 01. 2023	Sheet of	
File: E:\rad_detector_v500\..\rad_detector_v500\CONN.SchDoc	Drawn By:	

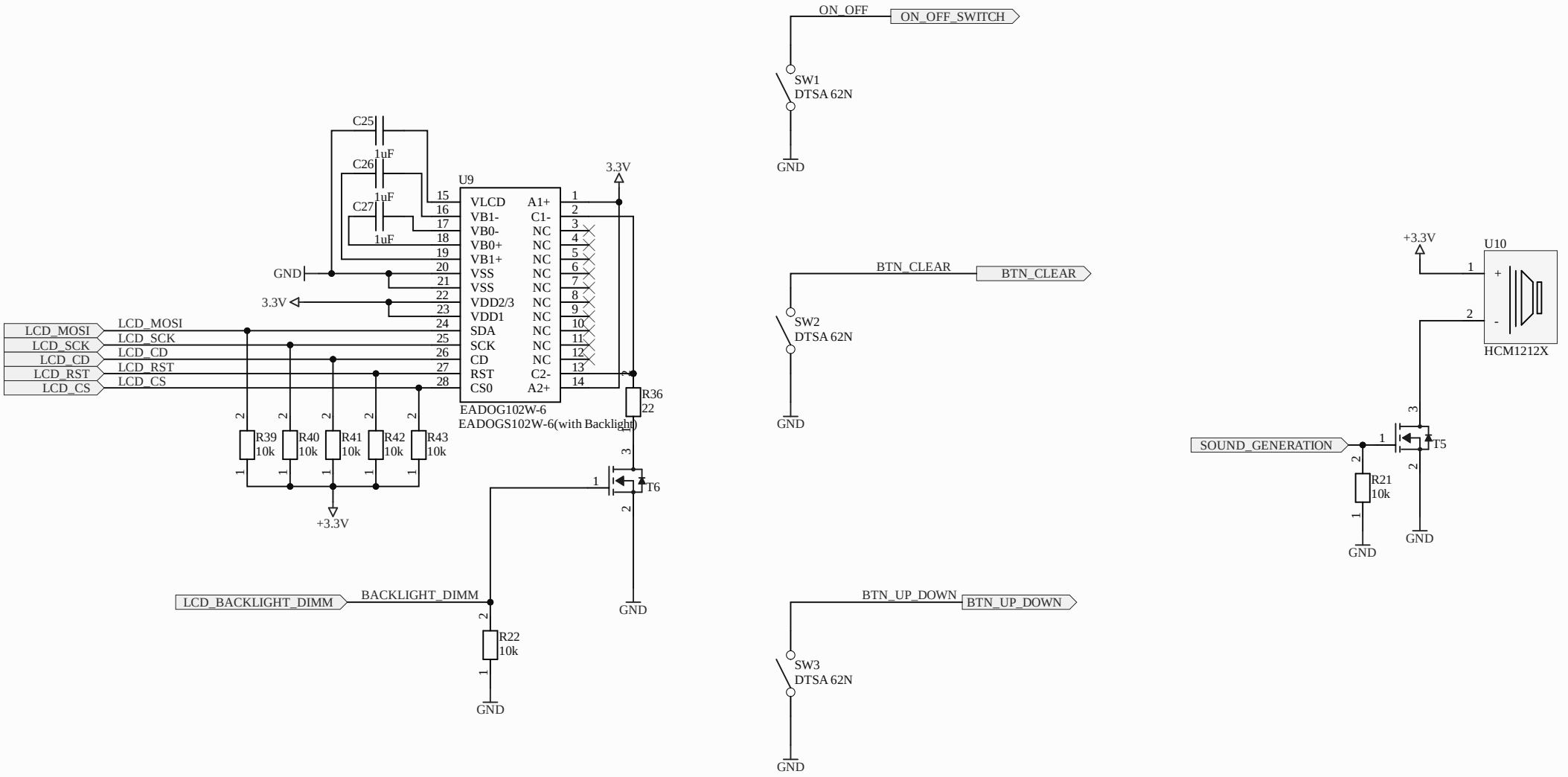

Title		
Size: A4	Number:	Revision:
Date: 5. 01. 2023	Sheet of	
File: E:\rad_detector_v500\..\rad_detector_v500_PERIPHERAL.SchDoc	Drawn By:	

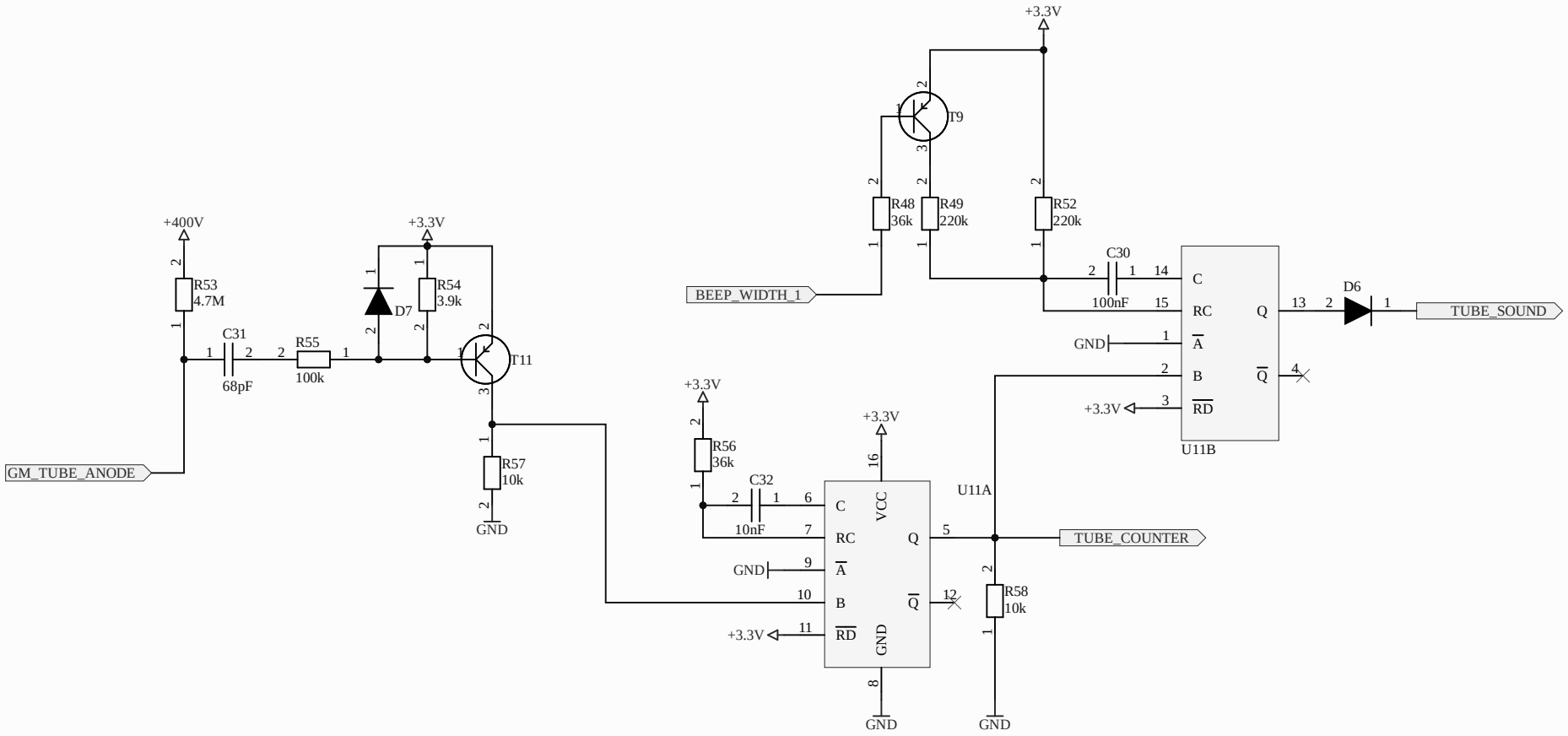

Title		
Size A4	Number	Revision
Date: 5. 01. 2023		Sheet of
File: E:\rad_detector_v500\..\rad_detector_v500.DsnWrk		Drawn By:

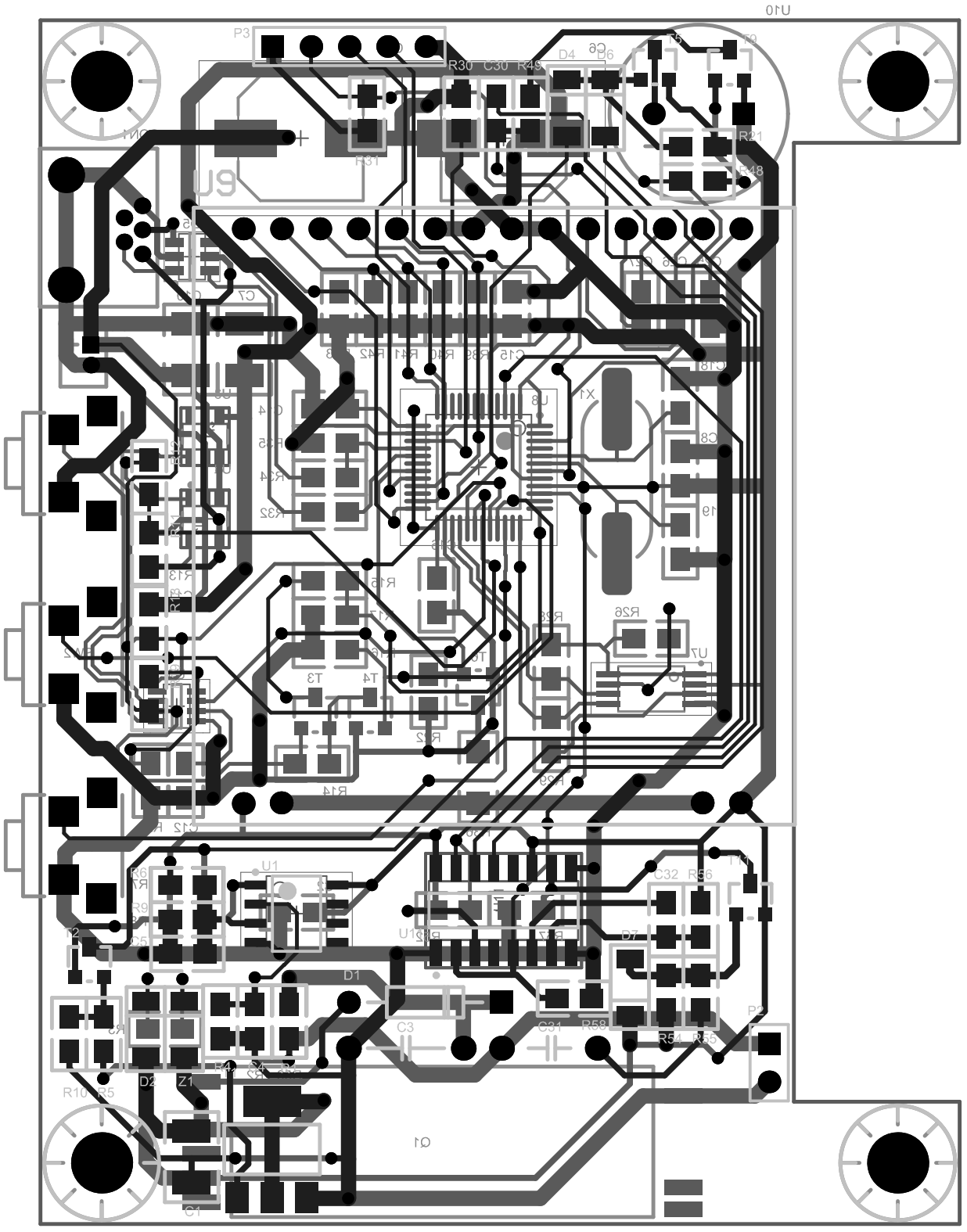
U10
P3
R30
C30
R49
D4
D6
T5
T9
R21
R48
R31
U9
C7
C15
R39
R40
R41
R42
C18
X1
U8
C8
R35
R34
R32
R16
R17
R23
R26
U7
T3
T4
R22
R14
R29
C12
U1
R6
R9
C5
T2
U1
C32
R56
D7
D1
C3
C31
R58
R54
R55
P2
R4
D2
Z1
R10
R5
C1
Q1

Line #	Name	Description	Designator	Quantity	Manufacturer 1	Manufacturer Part Number 1	Manufacturer Lifecycle 1	Supplier 1	Supplier Part Number 1	Supplier Unit Price 1	Supplier Subtotal 1
	10uF		C1, C7, C10, C12	4							
	100nF		C2, C5, C8, C11, C14, C15, C16, C30	8							
	10nF		C3, C4, C32	3							
	470uF		C6, C9	2							
	22pF		C18, C19	2							
	1uF		C25, C26, C27	3							
	68pF		C31	1							
	USB-MINI		CON1	1							
	DIODE		D1, D2, D4, D6, D7	5							
	HOLE		H1, H2, H3, H4	4							
	LP602945_CONN		P1	1							
	DARFON_CCFL_TRANSFORMER		Q1	1							
	30M		R1, R2	2							
	150		R3	1							
	200k		R4	1							
	1k		R5, R8	2							
	15k		R6, R7, R9	3							
	10k		R10, R14, R15, R16, R18, R20, R21, R22, R28, R29, R31, R39, R40, R41, R42, R43, R57, R58	18							
	47k		R11	1							
	91k		R12	1							
	2k		R13	1							
	3.3k		R17	1							
	33k		R19	1							
	-		R26	1							
	100k		R30, R55	2							
	22		R32, R34, R36	3							
	1.5k		R35	1							
	36k		R48, R56	2							
	220k		R49, R52	2							
	4.7M		R53	1							
	3.9k		R54	1							
	DTSA62N		SW1, SW2, SW3	3							
	BCP54		T1	1							
	BC848*		T2	1							
	BC856		T9, T11	2							
	MIC5504-3.3YM5-TR		U3	1							
	EADOGS102W-6(with Backlight)		U9	1							
	HCM1212X		U10	1							
	74HCT123		U11	1							
	XTAL		X1	1							
	DIODE_ZENER		Z1	1							
	STM32F103CBT6	ARM Cortex-M3 32-bit MCU, 128 KB Flash, 20 KB Internal RAM, 37 I/Os, 48-pin LQFP, -40 to 85 degC, Tray	U8	1							
	M24C02-DRDWBTP/K	EEPROM Memory IC 2Kb (256 x 8) I2C 400kHz 900ns 8-TSSOP	U7	1							
	GM TUBE	Header, 2-Pin	P2	1							
	Header 5	Header, 5-Pin	P3	1							
	LM393D	IC VOLT COMPARATOR DUAL LP 8SOIC	U1	1							
	MCP73832T-2ATI/OT	Miniature Single-Cell, Fully Integrated Li-Ion, Li-Polymer Charge Management Controller, 4.2V, 5-Pin SOT-23, Industrial Temperature, Tape and Reel	U2	1							
	MMBF170	N MOSFET	T4, T5, T6	3							
	BSS84	P-Chanel MOSFET	T3	1							
	LTC2955CTS8-1#TRPBF	Pushbutton On / Off Controller with Automatic Turn-On, 8-pin SOT23 (TS8-8), 0 to 70 degC, Pb-Free, Tape and Reel	U5	1							
	USBLC6-2SC6	Very low capacitance ESD protection, 3.5 pF, -40 to 125 degC, 6-Pin SOT23, RoHS, Tape and Reel	D5	1							