ExPECA Testbed

Overview and Configuration

Agenda

13:00 Overview of the testbed

- What and where is ExPECA?
- Hardware
- Software
- Observability / Monitoring
- GPS/GNSS synchronization
- Ericsson Private 5G

13:30 SDRs and 5G / Openairinterface

- Software-Defined Radio (SDR)
- Openairinterface (OAI) 5G

14:00 Configuration of the testbed

- Experimental Scenarios
- ExPECA Experimental Workflow
- ExPECA GUI

14:30 Coffee Break

15:00 Practical experiment – 5G setup with SDR + router

- Configuration overview
- Configuration with Python Notebook
- 5G Core setup
- GNodeB setup
- Verification (iperf performance test)

What is ExPECA?

- An Experimental Platform for Edge Computing Applications
- Connects wireless devices, SDRs, and an Ericsson Private 5G system with networking and compute resources, to form a highly configurable research environment

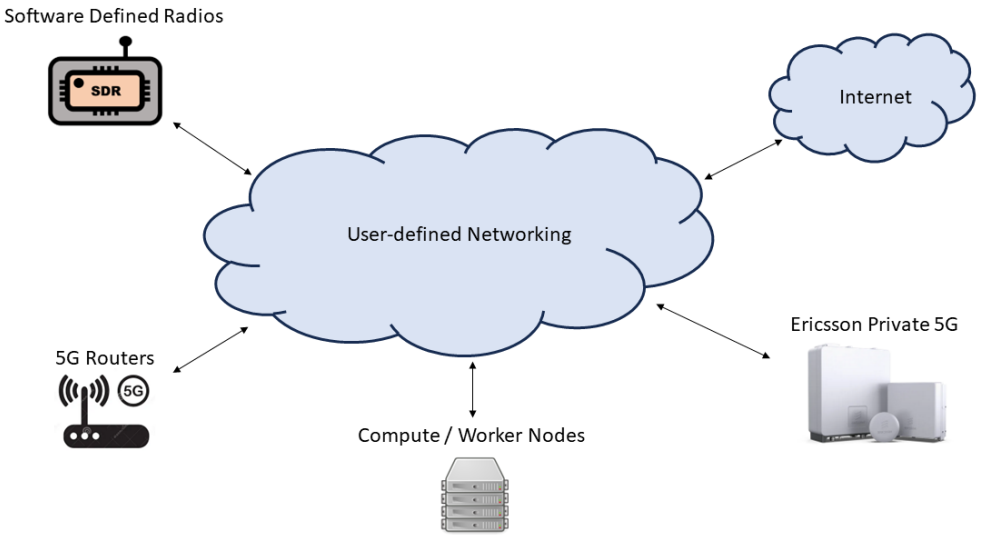

Where is ExPECA?

- Located in R1, the old reactor hall on KTH campus
- Provides a disturbance-free environment for wireless experimentation
- Provides a large area for distribution of wireless equipment

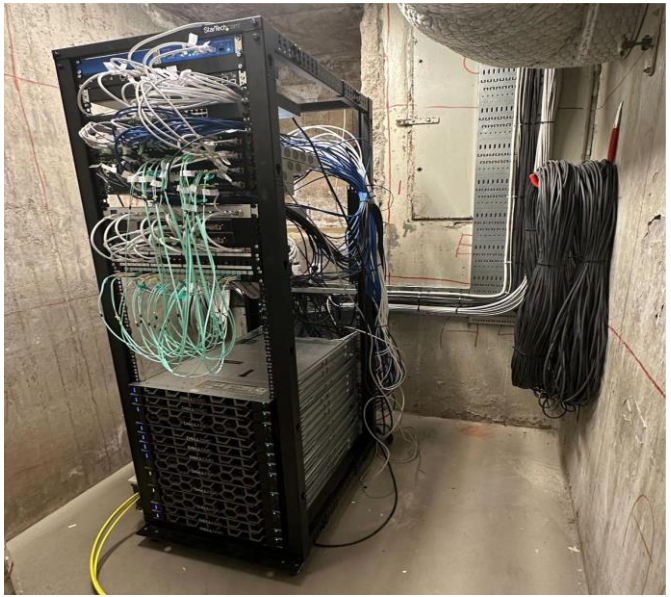

Hardware

- 10 SDRs, 8 5G COTS UEs, 4 Ericsson Private 5G Radio Dots
- 1 Controller server, 10 Worker servers, Ericsson Private 5G servers
- GPS sync system, including antenna, cables, and 1 PTP Grandmaster clock
- Networked by routers and switches
- Public internet address and connection

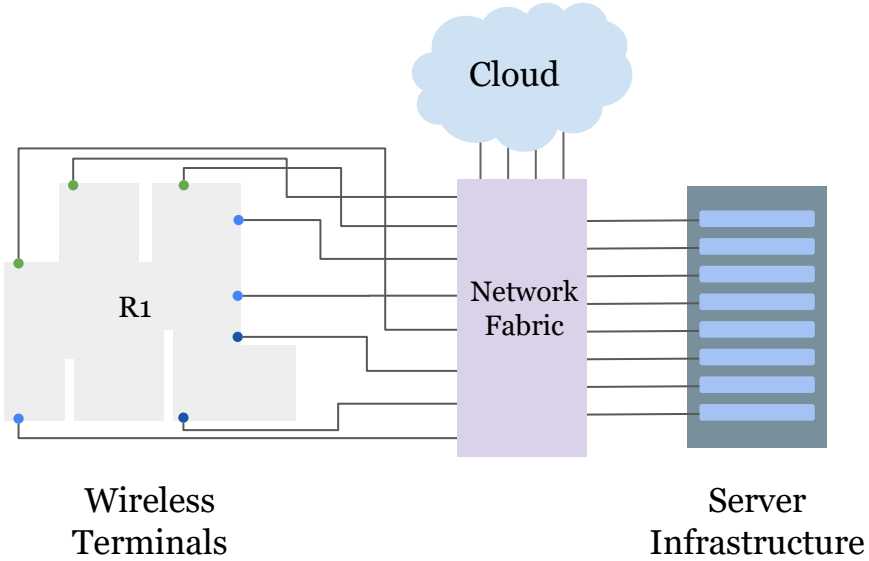

High Location Nodes (8m height)

= 5G Radio Dot (4x)

= Software Defined Radio (4x)

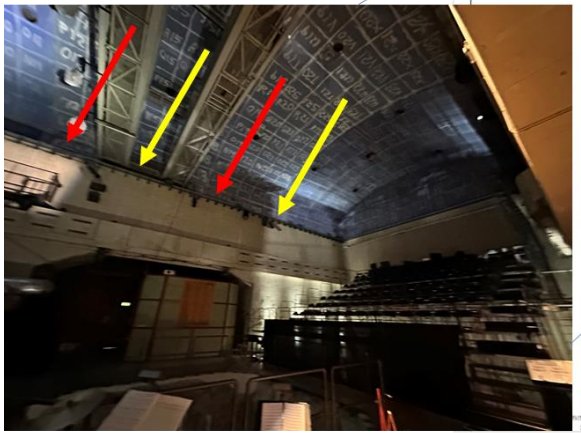

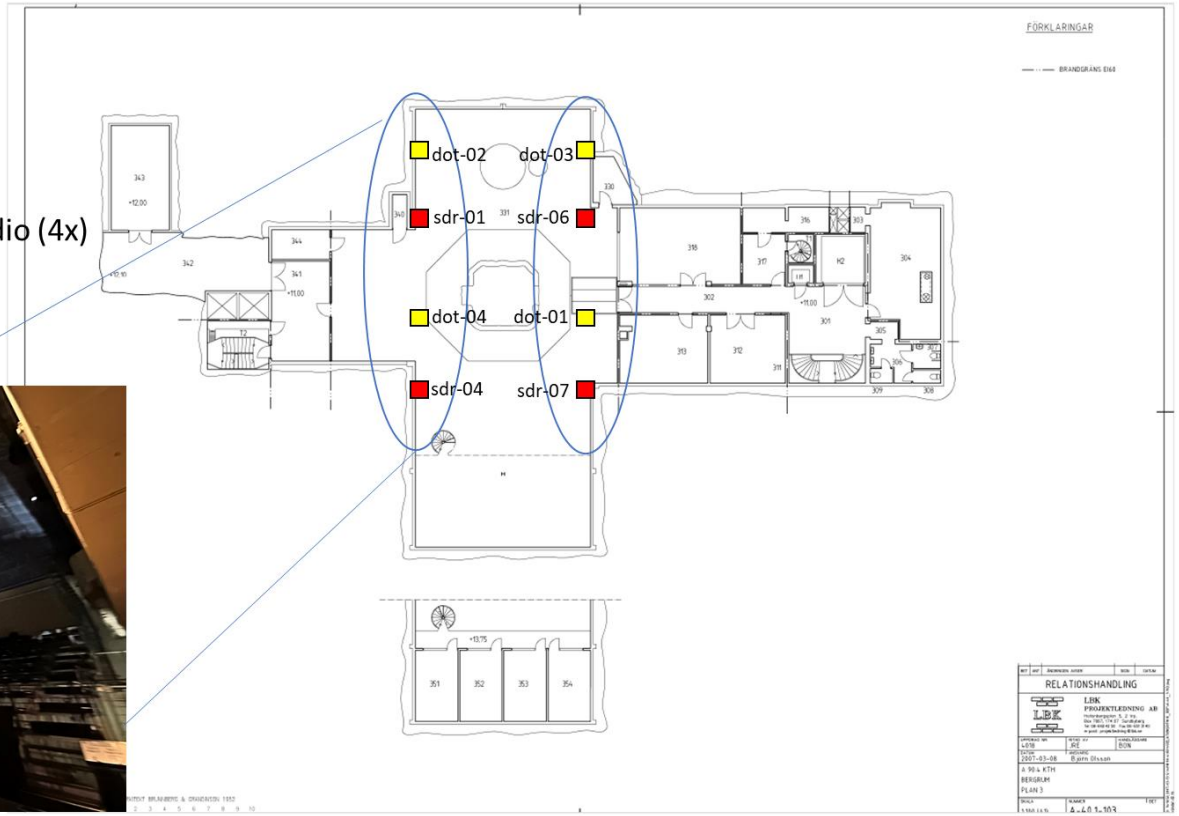

Medium Location Nodes (6m height)

= Software Defined Radio (3x)

= Advantech Router (4x)

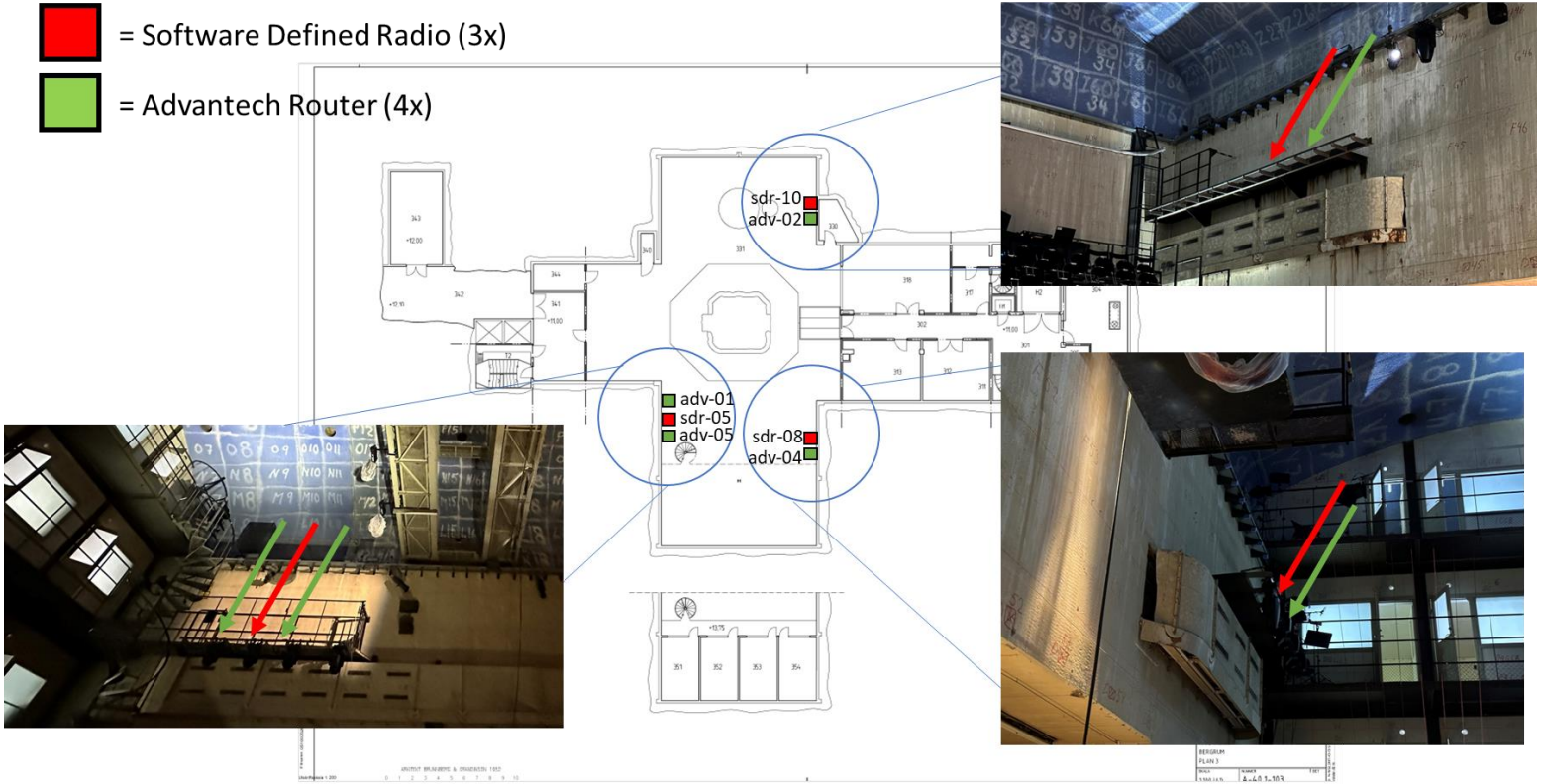

Low Location Nodes (2m height)

= Software Defined Radio (3x)

= Advantech Router (4x)

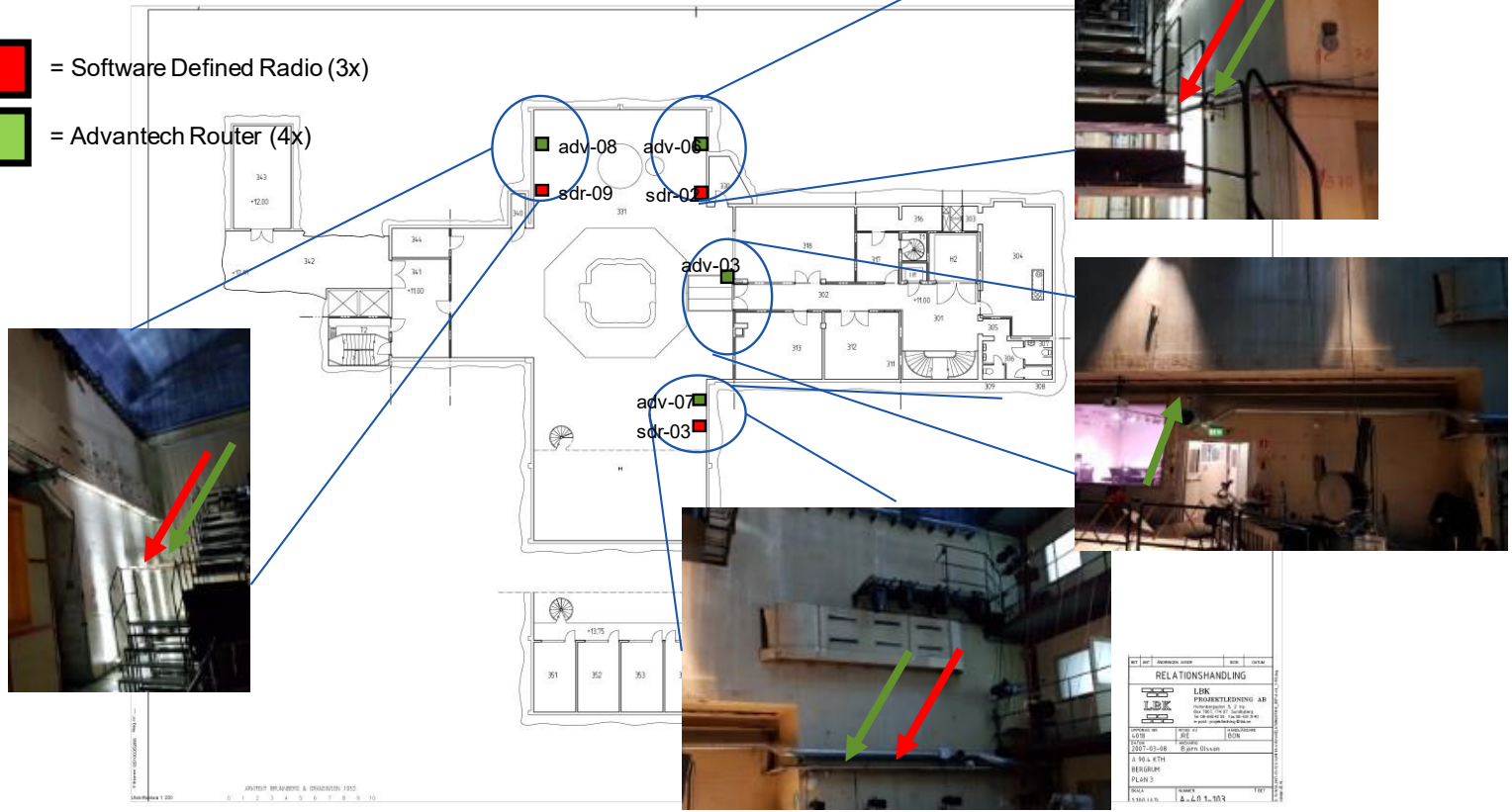

Software

- Orchestration adapted from Chameleon testbed, using Openstack
- Applications packaged as Docker images, distributed by Kubernetes

Observability / Monitoring

- Collects performance / status data from various parts of the testbed
- Displays them via Grafana dashboard for easy monitoring

Observability / Monitoring, continued

- Data for the Advantech 5G routers

Router advantech-03

Advantech Router Data

Label 1	Label 2	Value
1 - Active Connection	Cell	N/A
1 - Active Connection	Channel	N/A
1 - Active Connection	LAC	N/A
1 - Active Connection	Operator	N/A
1 - Active Connection	PLMN	N/A
1 - Active Connection	Registration	N/A
1 - Active Connection	Signal Strength	N/A

GPS / GNSS Synchronization

- Uses GPS / GNSS signal to time sync our servers and devices
- Better than µs precision
- Enables research that requires high precision time stamping
- Necessary for Ericsson Private 5G

Ericsson Private 5G

- 5G Core / RAN / Radio Dots hosted in R1
- Management via cloud GUI portal
- Currently one cell
- Different segments / QoS possible
- SIMs are locally made
- Each 5G router has 1 EP5G SIM
- GPS sync
- Radio Dots distributed at high level
- UL 87 Mbps and DL 700 Mbps

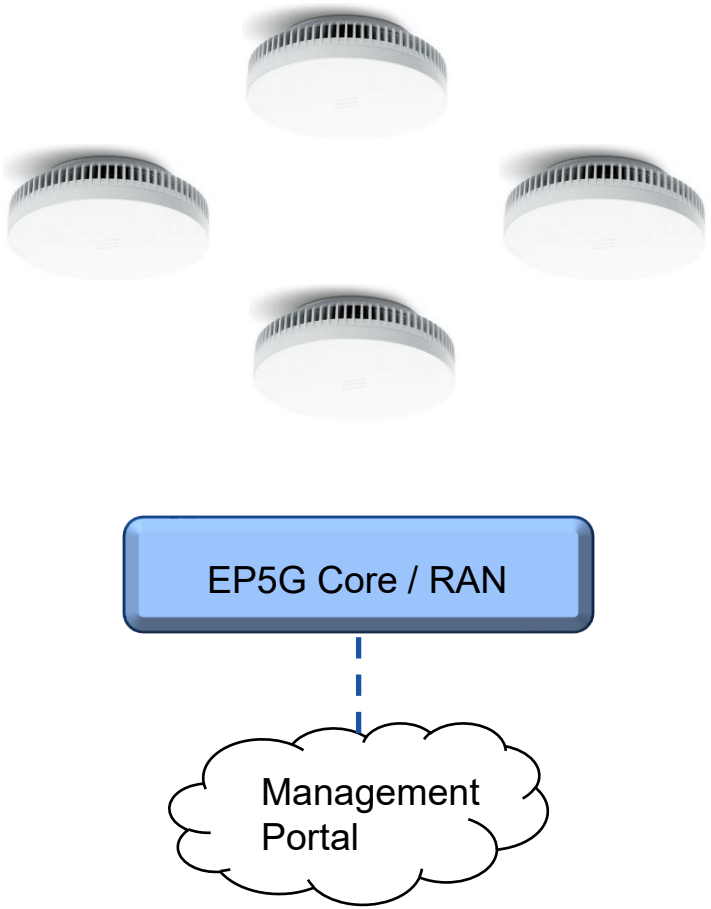

Ericsson Private 5G, Management

Menu
Monitoring
Site Overview
Dashboard
Speed Test
Event Logs
Network
Equipment
RADIUS
VRFs
Segments
SIM Cards
Fault Management
Sites
Support Access
Users
Support
Software Upgrades

Equipment

KTH - TECoSA | KTH - TECoSA R1 SID1333761

Help

List View | Node View

Mobility Configuration

Network Controllers

ID	Location	Cloud Connection	Service Status	Configuration Status
7D677C3	Default	Online	Up	Synced
8TH67C3	Default	Online	Up	Synced

Default | Clear filter

Equipment Type	Equipment Name	Equipment ID	Cloud Connection	Hardware Status	Cell Status
GNSS Receiver	GNSS				
Baseband	Baseband 1	bb1	Online	Up	
Indoor Radio Unit	IRU 1-1	IRU-1		Up	1/1
Radio Dot	RD 1-1-1	RD-1-1		Disabled	
Radio Dot	RD 1-1-2	RD-1-2		Up	
Radio Dot	RD 1-1-3	RD-1-3		Disabled	
Radio Dot	RD 1-1-4	RD-1-4		Disabled	

Ericsson Private 5G, Monitoring

Software-Defined Radio (SDR)

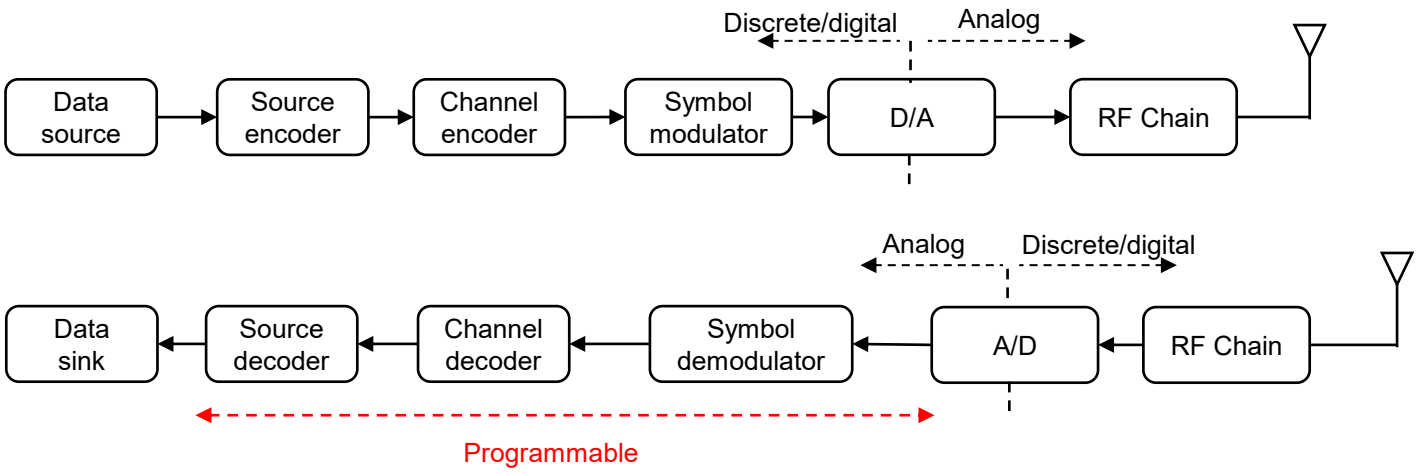

- Radio functions are implemented in software instead of fixed hardware

Software-Defined Radio (SDR) (Contd.)

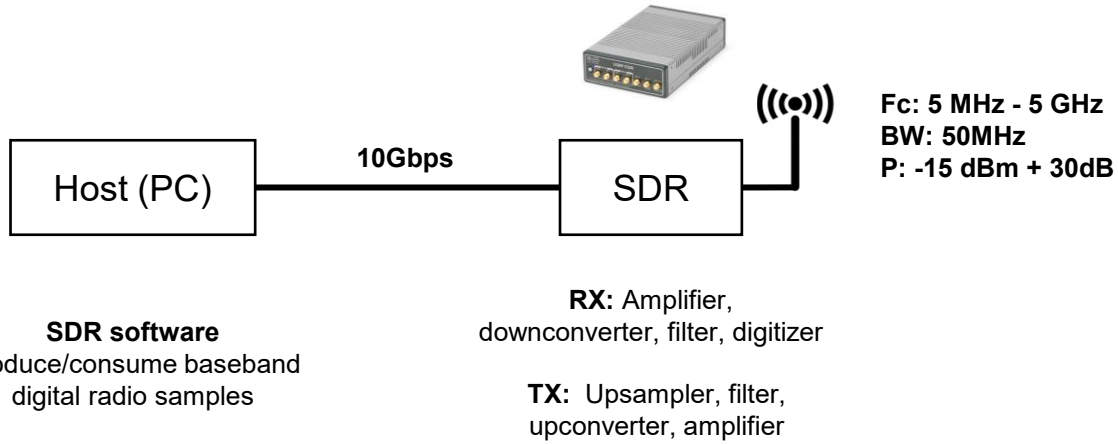

SDR hardware: *USRP E320*

SDR software:

- Openairinterface 5G/LTE, Mangocomm WiFi
- SRS 5G/LTE
- GNU Radio, etc

USRP E320

- **Frequency Range:** 70 MHz to 6 GHz.
- Up to 56 MHz of bandwidth
- MIMO capabilities – 2 TX 2 RX
- Supports SFP and RJ45 peripherals
- Power over Ethernet
- Supports C++, Python, GNURadio, SRS 5G/LTE, OpenAirInterface5G

OpenAirInterface 5G

- Main components in OAI 5G

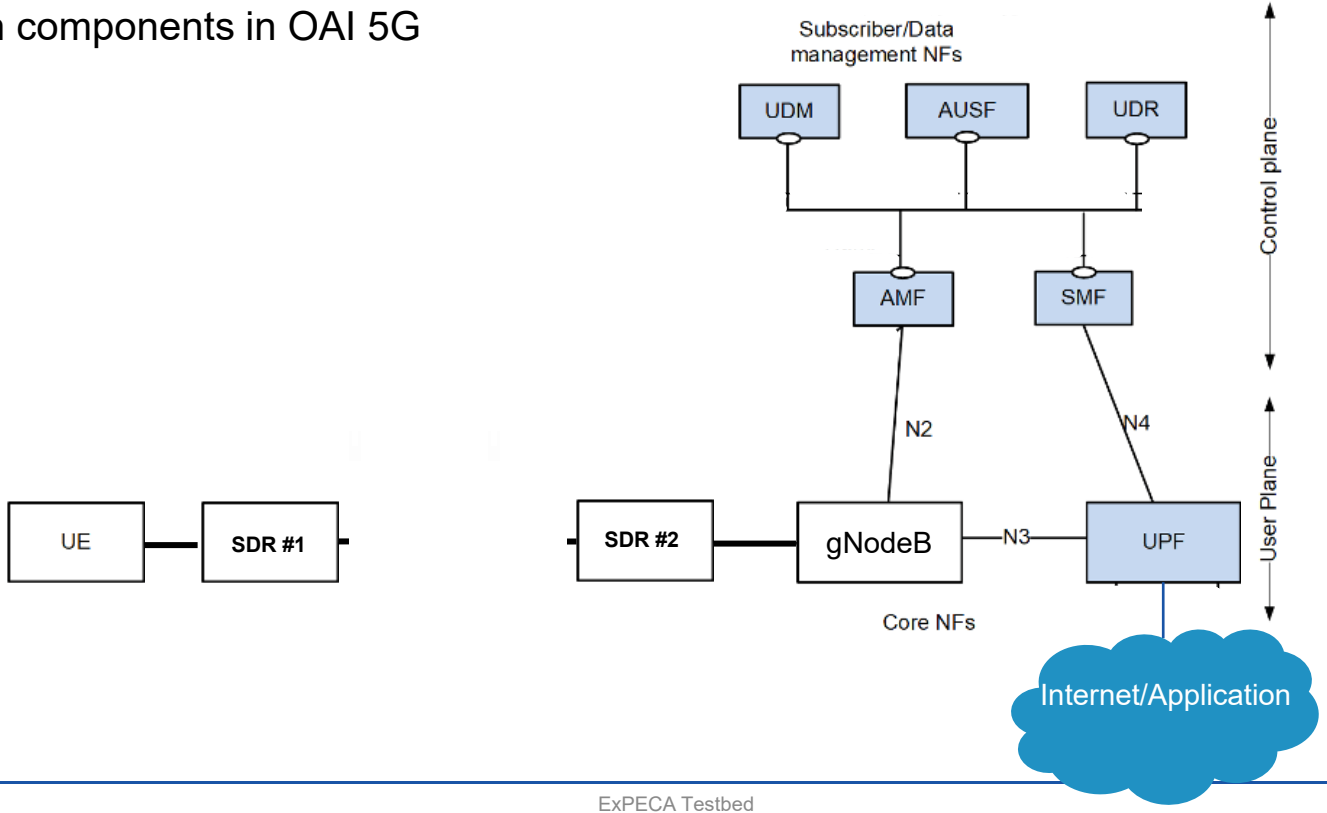

OpenAirInterface 5G (Continued)

- Main 5G services in OAI

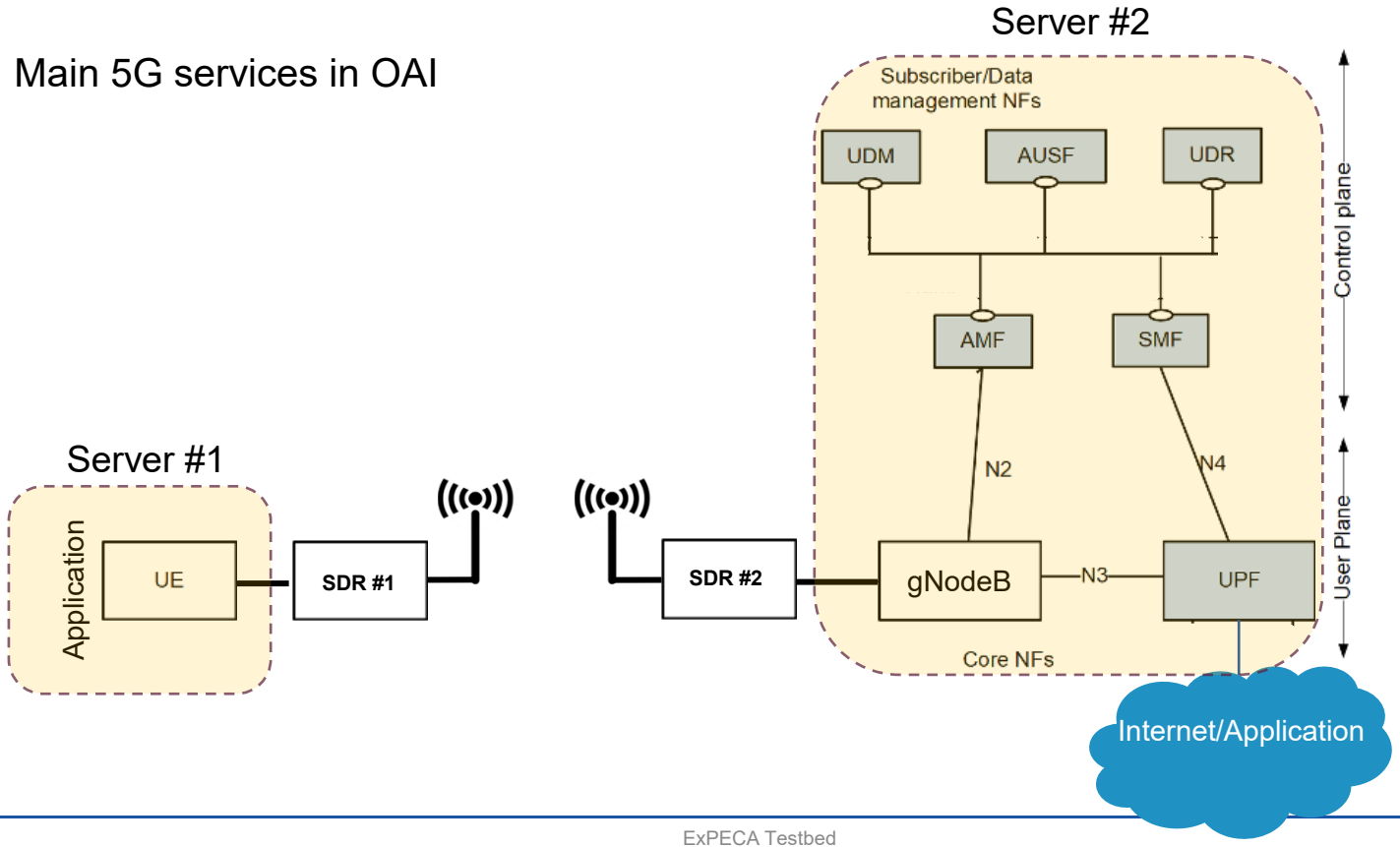

Experimental Scenarios

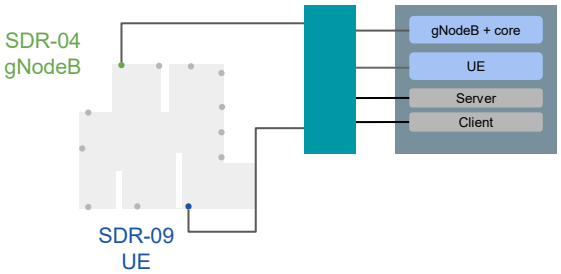

1) SDR-SDR 5G

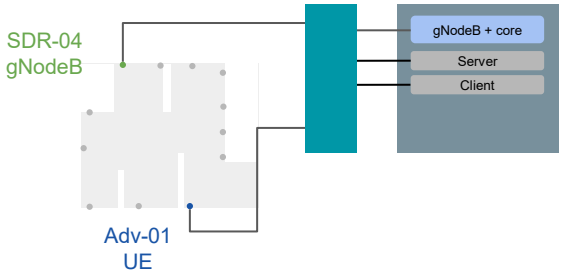

2) SDR-COTS 5G

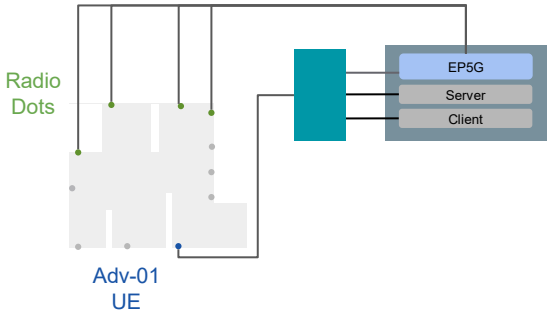

3) EP5G-COTS 5G

ExPECA Experimental Workflow

Reservation

- Reserve workers
- Reserve radios
- Reserve storage

Configuration

- Provision the network
- Run applications as containers

Extract the results

- Object and block storage

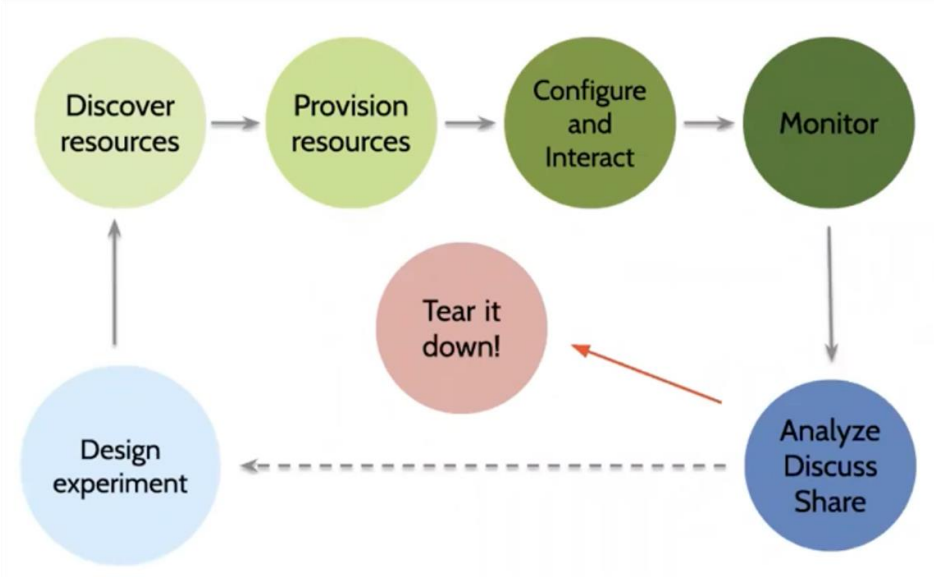

ExPECA Home Page

- https://expeca.proj.kth.se/

To testbed GUI

To Hardware Discovery

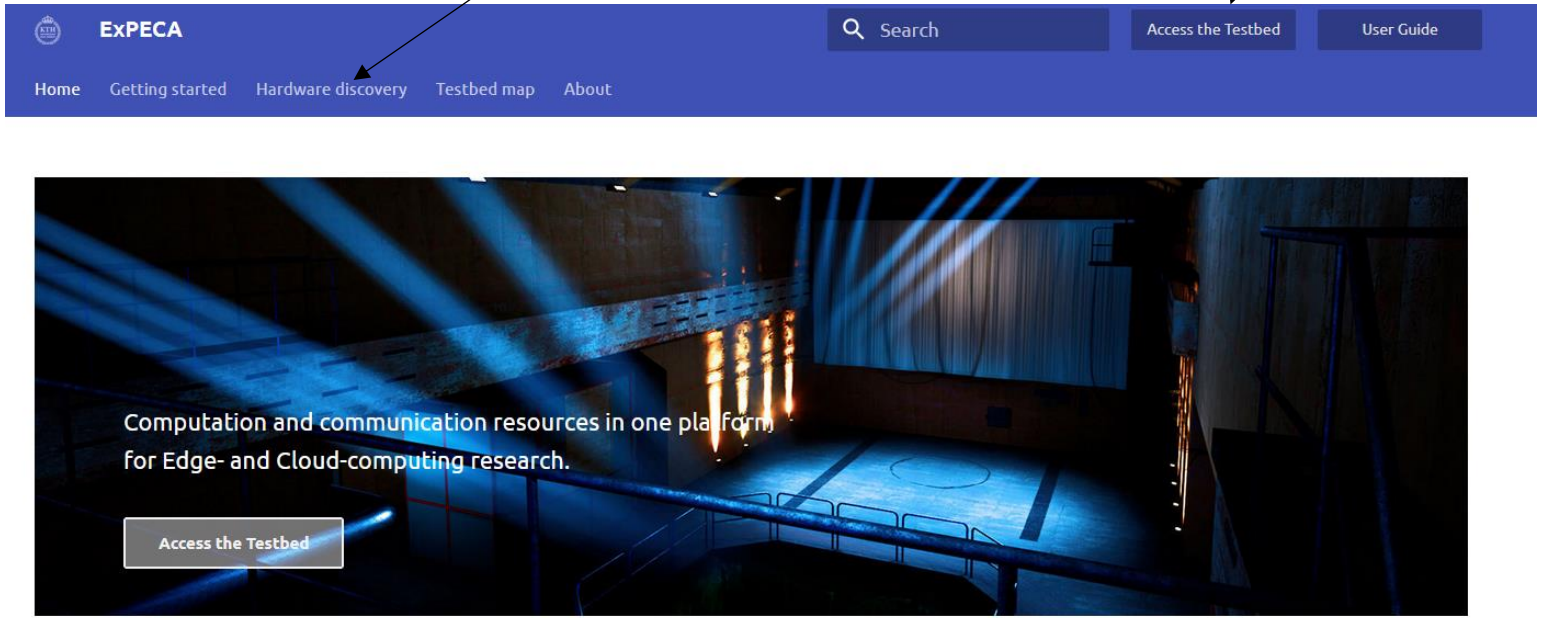

Hardware Discovery

- Hardware discovery
  - SDRs
    - sdr-01
    - sdr-02
    - sdr-03
    - sdr-04
    - sdr-05
    - sdr-06
    - sdr-07
    - sdr-08
    - sdr-09
    - sdr-10
  - Adv Routers
    - adv-01
    - adv-02
    - adv-03
    - adv-04
    - adv-05
    - adv-06
    - adv-07
    - adv-08
  - Worker Nodes
    - worker-01
    - worker-02
    - worker-03
    - worker-04

adv-03

ID	MODEL	LOCATION	SIMCARD1 IMSI	SIMCARD2 IMSI	EP5G IP Address
advantech-03	ICR-4453 5G Router	?	999080000000099	001010000000011	172.16.0.40

INTERFACE	INTERFACE NAME	IP	INTERFACE SPEED	INTERFACE MTU	SEGMENT ID	TYPE
SFP	eth2	10.42.3.1/24	10Gbps	9000	133	sfp

Remember for lease creation

adv-04

ID	MODEL	LOCATION	SIMCARD1 IMSI	SIMCARD2 IMSI	EP5G IP Address
advantech-04	ICR-4453 5G Router	?	999080000000010	001010000000010	172.16.0.96

INTERFACE	INTERFACE NAME	IP	INTERFACE SPEED	INTERFACE MTU	SEGMENT ID	TYPE
SFP	eth2	10.42.3.1/24	10Gbps	9000	134	sfp

GUI Overview / Starting Point

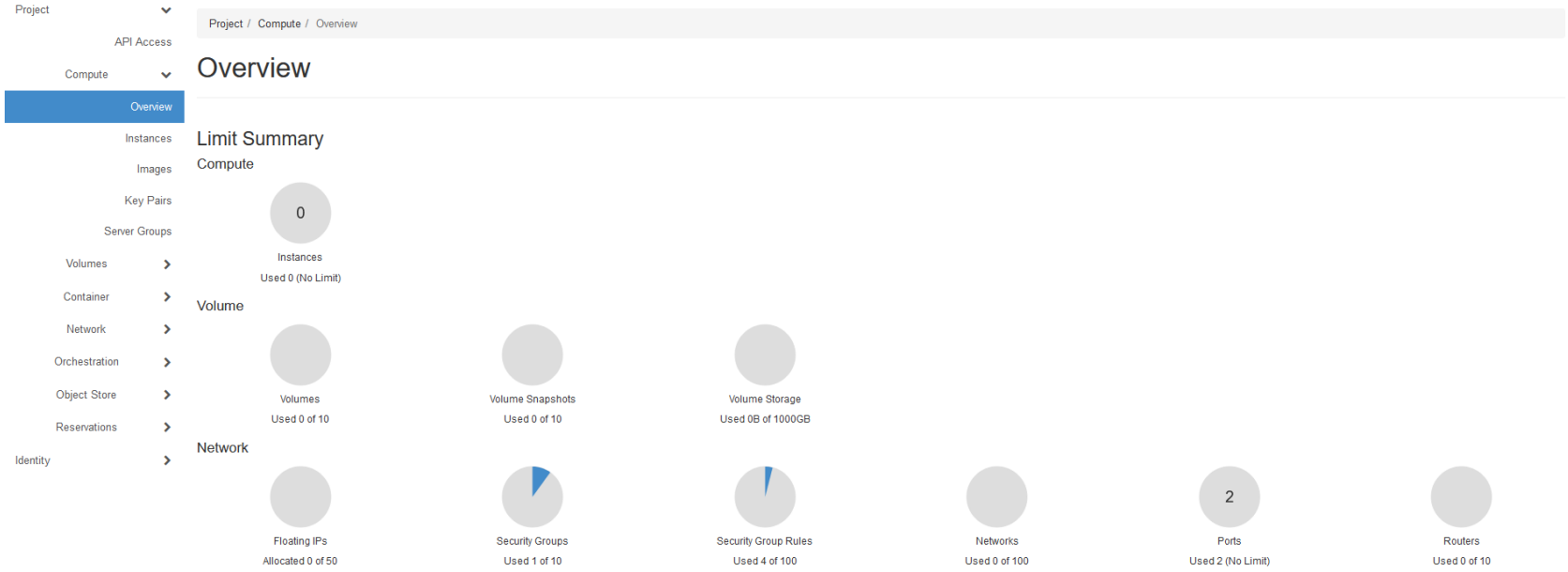

Practical experiment

- Set up a 5G Connection
- Network side: Openairinterface Core Network + GNodeB with E320 SDR
- UE side: Advantech 5G router
- Perform simple performance test

Configuration overview

- Openairinterface 5G network (Core Network + GNodeB) + 5G Router UE
- Configuration with Python Notebook
- https://github.com/KTH-EXPECA/examples/blob/main/workshop/workshop_setup_2pub.ipynb

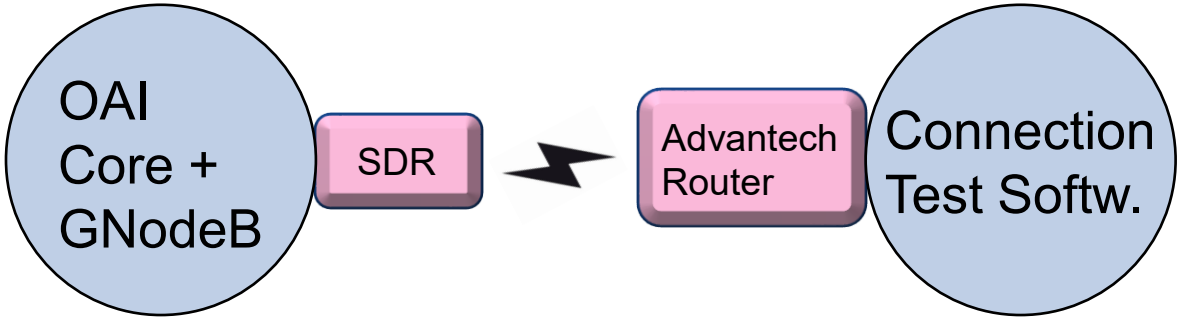

Configuration overview, continued

- Testbed configuration plan

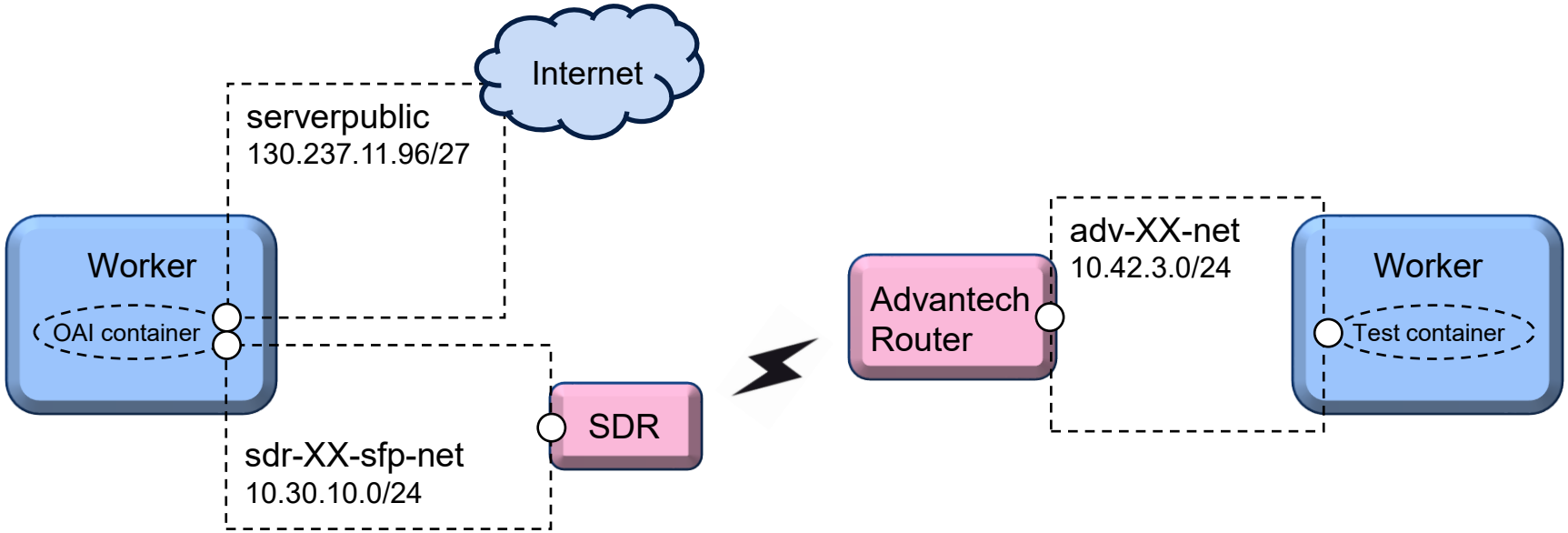

Configuration overview, continued

- Prerequisite: Google account, login on browser
- Prerequisite: SSH client on computer
- Python notebook: Configure ExPECA testbed via Python interface
- Colab: Google execution environment for Python notebook
- Python notebook uses API towards the testbed, via function calls

Configuration overview, continued

- Configure OAI Core + GNodeB in container via SSH
- Test 5G connection from container associated with 5G router
- https://github.com/KTH-EXPECA/examples/blob/main/workshop/workshop_gnbcoreinone.md
- For SSH to Core/GNodeB container, 2 SSH terminals will be used
- For SSH to UE container, 1 SSH terminal will be used
- ssh root@<Public IP>

Extra: Configuration overview, EP5G
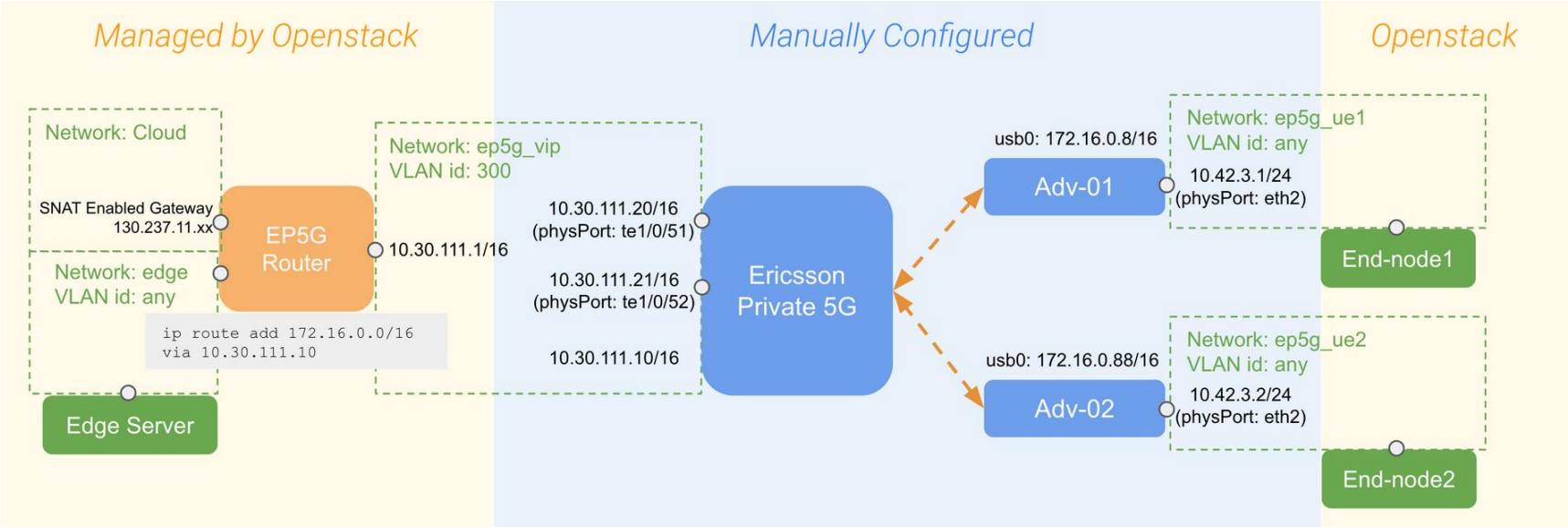
- Configuration with Python Notebook
- https://github.com/KTH-EXPECA/examples/blob/main/workshop/ep5g_public_edge_iperf.ipynb