EL2425 - Slip Control
Meeting agenda 2016-11-16

November 29, 2016

1 Done

2 Ongoing

2.1 Tracking the centerline of a lane using a PID controller

The problem can be decomposed into two separate and independent components involving a translation and a rotation of the vehicle.

Translational component

We assume that the pose of the vehicle at time t is (x_c, y_c, v_c, ψ_v) and that two range scans at $+90°$ and $-90°$ with respect to the longitudinal axis of the vehicle are available, which are denoted as CL and CR respectively. Also, in figure 1, point O' is a future reference and the angle λ is the angle that the vehicle should make in order to reach O' in a future moment.

Then, since $CL + CR = L = OL + OR$ and $CL = OC + OL$, this means that

$$OC = OR - CR = \frac{L}{2} - CR = \frac{CL + CR}{2} - CR = \frac{CL - CR}{2} \tag{1}$$

where L is the width of the lane whose centerline the vehicle is to track.

Furthermore, in the $CC'O'$ triangle

$$\tan\lambda = \frac{O'C'}{CC'} = \frac{OC}{CC'} = \frac{CL - CR}{2CC'} \tag{2}$$

$$\lambda = \tan^{-1}\frac{CL - CR}{2CC'} \tag{3}$$

The length CC' is unknown and can be set beforehand. Its magnitude will determine the vehicle's rate of convergence to the centerline of the lane.

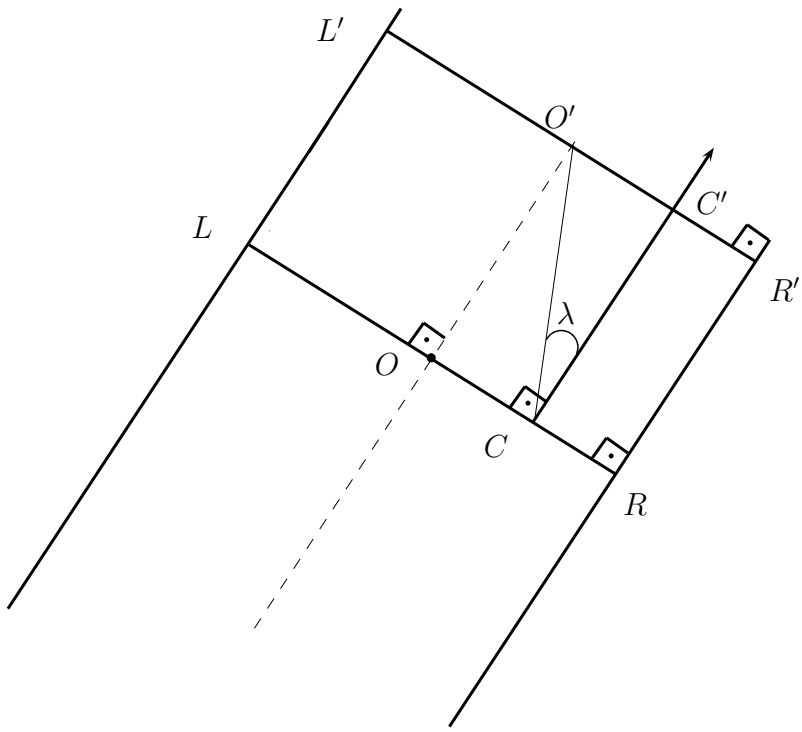

Figure 1: The vehicle's heading angle is equal to that of the lane's. However, its position is off track.

The angular error of the translational component is then

$$e_t = -\tan^{-1}\frac{CL - CR}{2CC'} \tag{4}$$

where the minus sign is introduced due to the convention that a left turn is assigned a negative value.

Rotational component

The rotational component problem can be solved in two ways, of which the second is more robust than the first.

In the first solution, we assume that the the pose of the vehicle at time t as (x_c, y_c, v_c, ψ_v) and that three range scans at $+90°$, $0°$ and $-90°$ with respect to the longitudinal axis of the vehicle are available, which are denoted as CL, CF and CR respectively.

Here we can distinguish two cases: one where the vehicle is facing the right lane boundary and one where it is facing the left one. It is not obvious in this configuration where the vehicle is heading: the only available information so far is only the three range scans.

In the first case, the heading angle error is

$$\phi = \tan^{-1}\frac{CR}{CF} \tag{5}$$

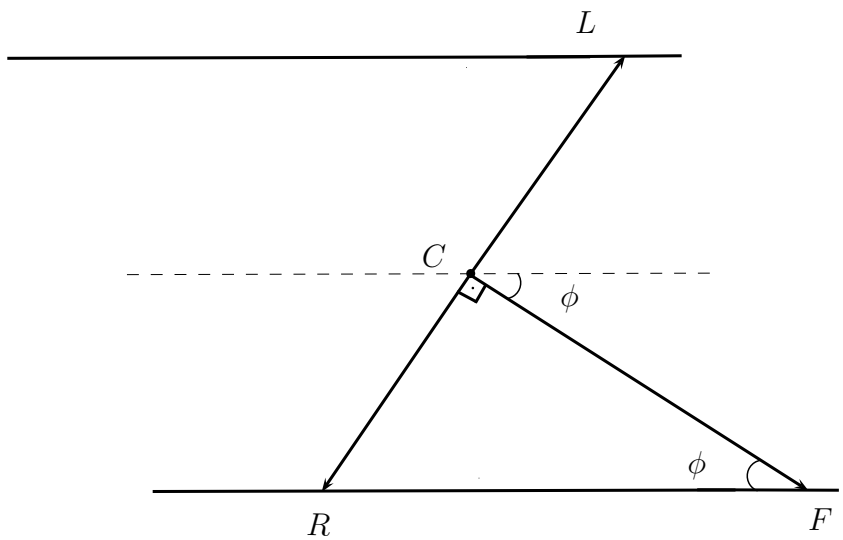

Figure 2: The vehicle's position and its reference are equal. However, the vehicle's heading is off track. Its heading is towards the right lane boundary.

The rotational error of the vehicle in this case is

$$e_r = -\tan^{-1}\frac{CR}{CF} \tag{6}$$

therefore the overall angular error of the vehicle in this case is

$$e = -\tan^{-1}\frac{CL - CR}{2CC'} - \tan^{-1}\frac{CR}{CF} \tag{7}$$

where the minus signs are introduced due to the convention that a left turn is assigned a negative value.

In the second case, the heading angle error is

$$\phi = \tan^{-1}\frac{CL}{CF} \tag{8}$$

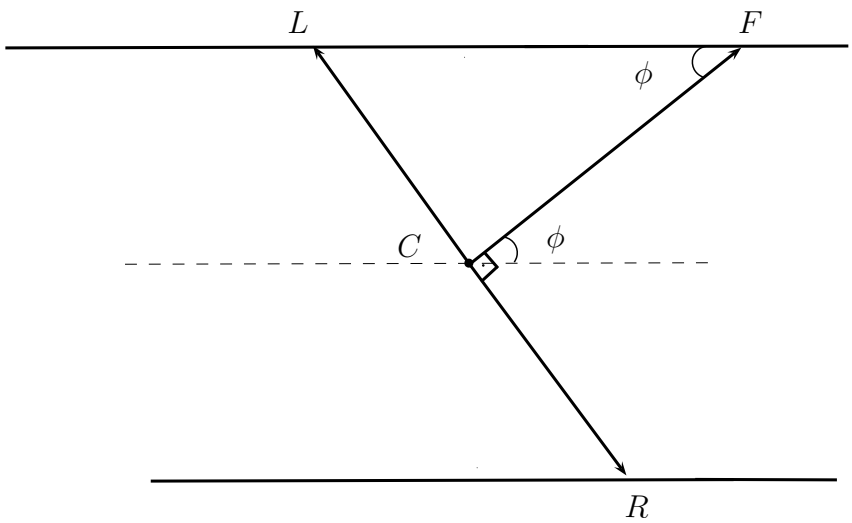

Figure 3: The vehicle's position and its reference are equal. However, the vehicle's heading is off track. Its heading is towards the left lane boundary.

The rotational error of the vehicle in this case is

$$e_r = \tan^{-1}\frac{CL}{CF} \tag{9}$$

therefore the overall angular error of the vehicle in this case is

$$e = -\tan^{-1}\frac{CL - CR}{2CC'} + \tan^{-1}\frac{CL}{CF} \tag{10}$$

where the minus sign of the translational error is introduced due to the convention that a left turn is assigned a negative value.

In order to deduce the correct value of ϕ ($-\tan^{-1}\frac{CR}{CF}$ or $\tan^{-1}\frac{CL}{CF}$) further ranges scans are needed. To this end, a difference between ranges around point F is taken: starting at the right of F and moving anti-clockwise, we calculate the difference between two range scans for a given angle between them. If its sign is negative then the vehicle is facing the right lane boundary; if not, it is facing the left lane boundary. This concept is depicted in figures 4 and 5.

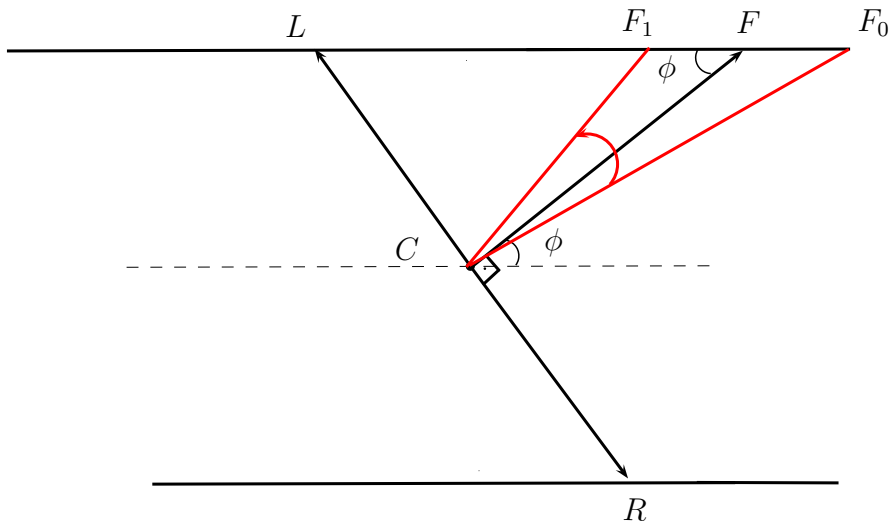

Figure 4: $CF_0 > CF > CF_1$, hence $CF_0 - CF_1 > 0$ and $\phi = tan^{-1}\dfrac{CL}{CF}$

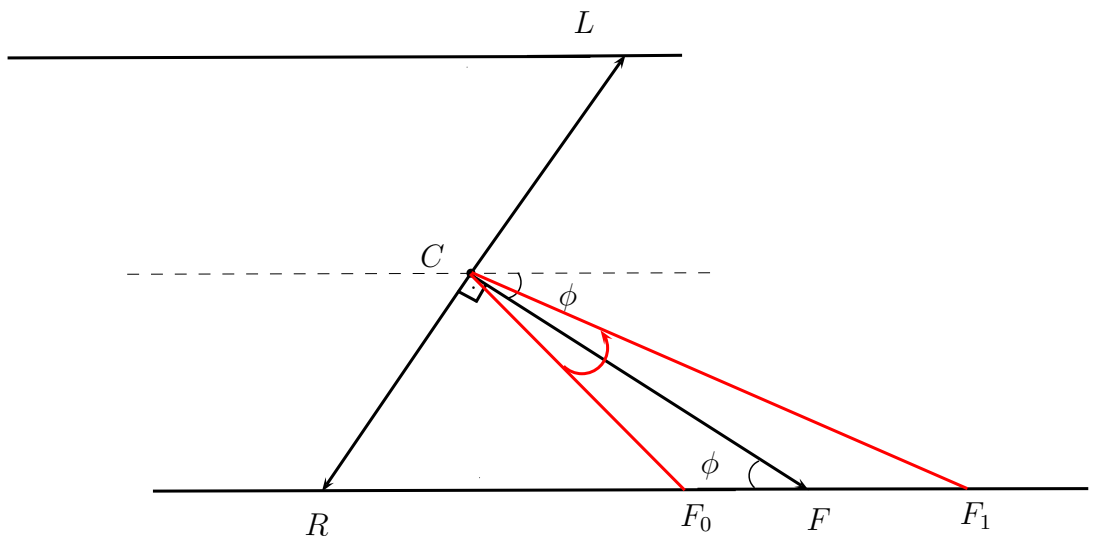

Figure 5: $CF_0 < CF < CF_1$, hence $CF_0 - CF_1 < 0$ and $\phi = -tan^{-1}\dfrac{CR}{CF}$

In the second solution we assume that the the pose of the vehicle at time t as (x_c, y_c, v_c, ψ_v) and that *two* range scans at $+90°$ and $-90°$ with respect to the longitudinal axis of the vehicle are available, which are denoted as CL and CR respectively. Here, again we distinguish two cases, one where the vehicle is facing the right lane boundary and one where it is facing the left one. It is not obvious in this configuration where the vehicle is heading: the only available information so far is only the two ranges CR and CL.

We retrieve the first minimum distance from the range scan available at time t, and denote the point which corresponds to this distance with M_0. The angle between point M_0 and the longitudinal axis of the vehicle is denoted with α. In order to find this angle, we can exploit the fact that each ray of the scan is separated from the next by res degrees, while

all of them are stored in an array sequentially, in an anti-clockwise manner. In the case of the `HOKUYO-UST-10LX-LASER`, the angular resolution is $res = 0.45°$, and the starting angle is $-135°$ with respect to the longitudinal axis of the vehicle. This means that we can retrieve the angle α by first calculating the number of indices between the one that corresponds to the ray with the minimum range and the one that corresponds to $+135°$ (which in our case is $135/0.25 = 540$) with regard to the laser's system of reference, and then by multiplying this number Δi by the angular resolution res. Hence, $\alpha = 0.25 \times \Delta i$.

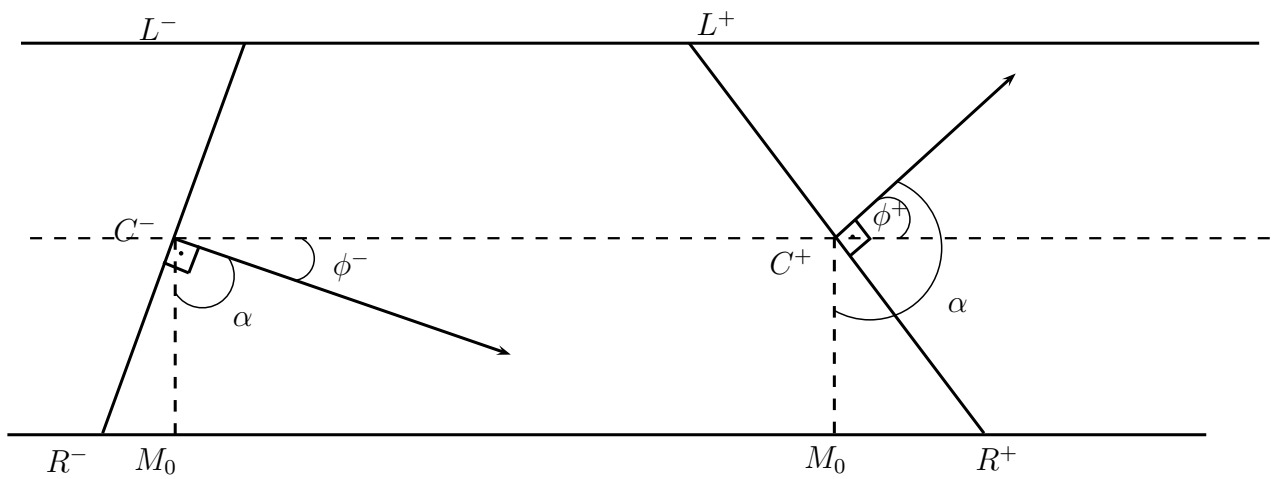

Figure 6

At this point we do not know whether the vehicle is pointing to the left or to the right lane boundary yet. However, we can determine the sign and the magnitude of the orientation of the vehicle with respect to the orientation of the lane by examining the sign of the difference $\alpha - 90°$: if it is negative, the vehicle is pointing towards the right boundary lane, if it is positive, towards the left. Furthermore, we can now calculate the magnitude of the orientation of the vehicle as the difference $|\alpha - 90°|$, as shown in figure 8. In conclusion, when the car is located at the centerline, its orientation with respect to the orientation of the lane is

$$\phi = \alpha - 90°$$

therefore the overall angular error of the vehicle in this case is

$$e = -\tan^{-1}\frac{CL - CR}{2CC'} + \alpha - 90 \tag{11}$$

Since the input to the plant is in terms of angular displacement, this is in fact the error that the PID controller can include and utilize in order to determine the plant's input.

The angular input to the vehicle will then be

$$\delta = K_p \cdot e + K_d \cdot \frac{de}{dt} + K_i \cdot \int e dt \tag{12}$$

2.2 Tracking the centerline of a lane using a MPC controller

In figure 7, the x axis is fixed on the lane's centerline, while axis y is perpendicular to it, facing the left boundary of the lane. The origin is at point O. The vehicle is represented by point C. The orientation of the vehicle with respect to the lane (the x-axis) is ϕ. Given this configuration and two ranges from the range scan, at $-90°$ and $90°$ with respect to the longitudinal axis of the vehicle (denoted by CR and CL respectively), the objective is to find the distance OC and the angle ϕ so that a MPC optimization problem can be solved with OC and ϕ acting as initial conditions. The only source of information is the lidar itself.

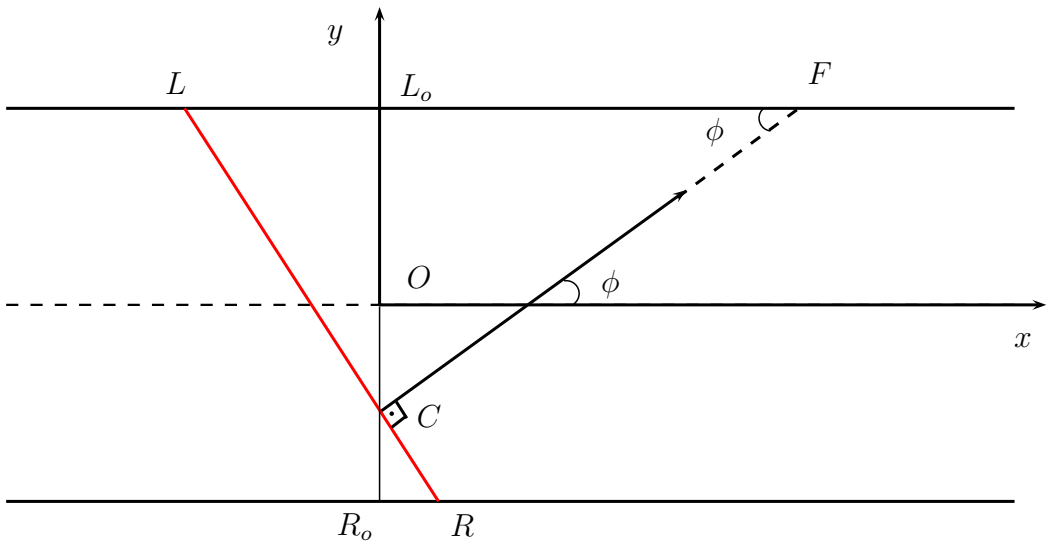

Figure 7

Initial conditions

Finding ϕ

Here we can distinguish two cases, one where the vehicle is facing the right lane boundary and one where it is facing the left one. It is not obvious in this configuration where the vehicle is heading: the only available information so far is only the two ranges CR and CL.

In the first case, when the vehicle is on the right semilane, $CL - CR > 0$. We retrieve the minimum distance from the range scan available at time t, and denote the point which corresponds to this distance with M. The angle between point M and the longitudinal axis of the vehicle is denoted with α. In order to find this angle, we can exploit the fact that each ray of the scan is separated from the next by res degrees, while all of them are stored in an array sequentially, in an anti-clockwise manner. In the case of the `HOKUYO-UST-10LX-LASER`, the angular resolution is $res = 0.45°$, and the starting angle is $-135°$ with respect to the longitudinal axis of the vehicle. This means that we can retrieve the angle α by first calculating the number of indices between the one that corresponds to the ray with the minimum range and the one that corresponds to $+135°$ (which in our case is $135/0.25 = 540$) with regard to the laser's system of reference, and then by multiplying this number Δi by the angular resolution res. Hence, $\alpha = 0.25 \times \Delta i$.

At this point we do not know whether the vehicle is pointing to the left or to the right lane boundary. However, we can determine the sign and the magnitude of the orientation of the vehicle with respect to the orientation of the lane by examining the sign of the difference $\alpha - 90°$: if it is negative, the vehicle is pointing towards the right boundary lane, if it is positive, towards the left. Furthermore, we can now calculate the magnitude of the orientation of the vehicle as the difference $|\alpha - 90°|$, as shown in figure 8. In conclusion, if the car is located at the right semilane its orientation with respect to the orientation of the lane is

$$\phi = sign(CL - CR)(\alpha - 90)$$

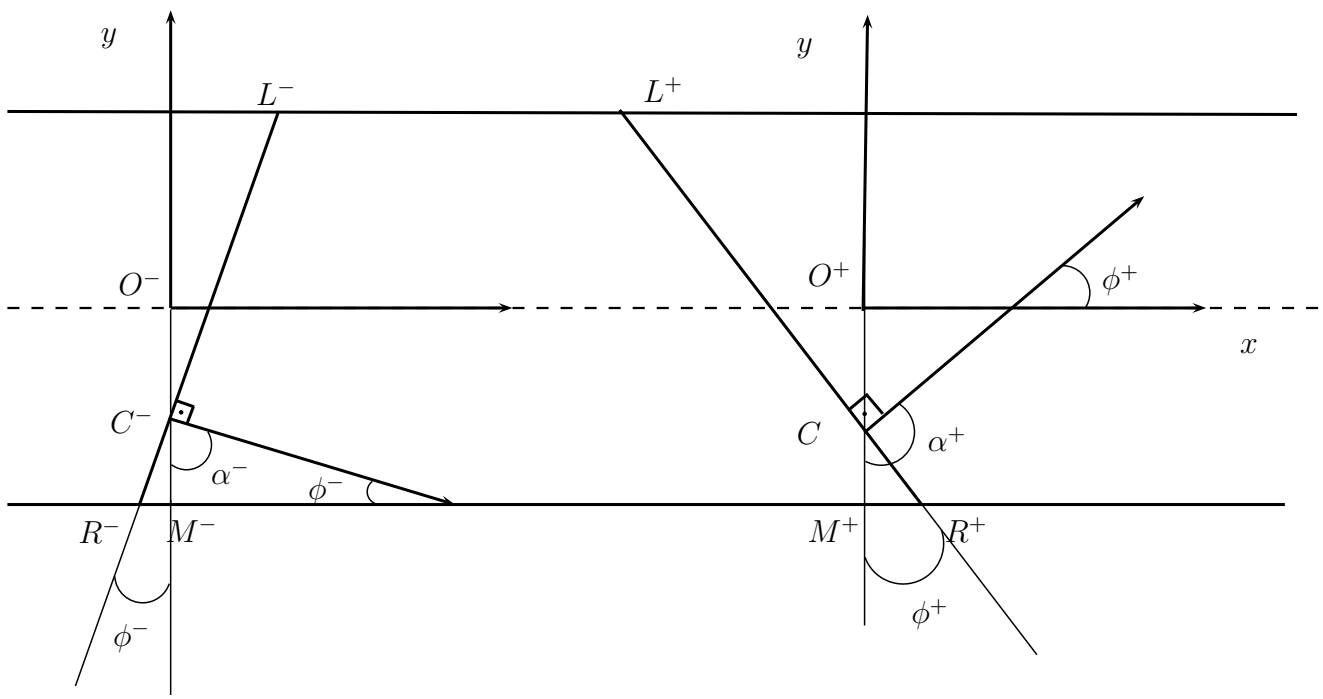

Figure 8: The vehicle is at the right side of the lane.

In the second case, when the vehicle is on the left semilane, $CL - CR < 0$. We retrieve the minimum distance from the range scan available at time t, and denote the point which corresponds to this distance with M. The angle between point M and the longitudinal axis of the vehicle is denoted with α. In order to find this angle, we can exploit the fact that each ray of the scan is separated from the next by res degrees, while all of them are stored in an array sequentially, in an anti-clockwise manner. In the case of the `HOKUYO-UST-10LX-LASER`, the angular resolution is $res = 0.45°$, and the starting angle is $-135°$ with respect to the longitudinal axis of the vehicle. This means that we can retrieve the angle α by first calculating the number of indices between the one that corresponds to the ray with the minimum range and the one that corresponds to $+225°$ (which in our case is $225/0.25 = 900$) with regard to the laser's system of reference, and then by multiplying this number Δi by the angular resolution res. Hence, $\alpha = 0.25 \times \Delta i$.

At this point we do not know whether the vehicle is pointing to the left or to the right lane boundary. However, we can determine the sign and the magnitude of the orientation of the vehicle with respect to the orientation of the lane by examining the sign of the difference $\alpha - 90°$: if it is positive, the vehicle is pointing towards the right boundary lane, if it is negative, towards the left. Furthermore, we can now calculate the magnitude of the orientation of the vehicle as the difference $|\alpha - 90°|$, as shown in figure 9. In conclusion, if the car is located at the left semilane its orientation with respect to the orientation of the lane is

$$\phi = sign(CL - CR)(\alpha - 90)$$

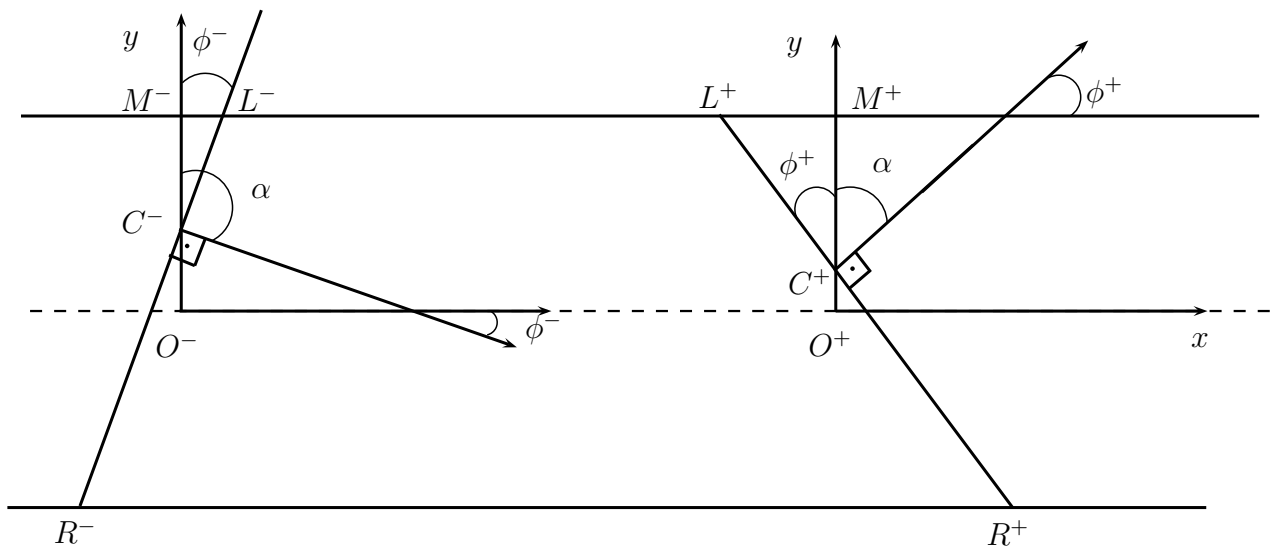

Figure 9: The vehicle is at the left side of the lane.

In conclusion, angle $\phi = sign(CL - CR)(\alpha - 90)$, where angle α is calculated as a (weighted by angular resolution) difference between the indices of the minimum range provided by the range scan at time t and that of the minimum range between CL and CR.

Finding OC

Looking at figure 7 we can see that

$$L_oO + OC + CR_o = W = CR_o + CL_o \tag{13}$$

where W is the width of the lane. But $L_oO = \dfrac{W}{2}$ hence

$$OC + CR_o = \frac{1}{2}(CR_o + CL_o) \Leftrightarrow \tag{14}$$

$$OC = \frac{1}{2}(CL_o - CR_o) \tag{15}$$

But $CL_o = CLsin\lambda$ and $CR_o = CRcos\phi$, hence

$$OC = \frac{1}{2}(CLsin\lambda - CRcos\phi) \tag{16}$$

From triangle LCF in the case where the vehicle is facing the left lane boundary, we note that $\phi + \lambda + \frac{\pi}{2} = \pi$, hence $\lambda = \frac{\pi}{2} - \phi$. Then, we conclude that

$$OC = \frac{1}{2}(CL - CR)cos\phi \tag{17}$$

Obtaining the linearized kinematic model

The model constitutes the equations of motion of the vehicle, and has four states (x, y, v and ψ) and two inputs (v_i and δ). The equations of the vehicle's motion that are relevant here are

$$\dot{x} = vcos(\psi + \beta) \tag{18}$$
$$\dot{y} = vsin(\psi + \beta) \tag{19}$$
$$\dot{v} = \frac{v_i - v}{\tau} \tag{20}$$
$$\dot{\psi} = \frac{v}{l_r}sin\beta \tag{21}$$

Sampling with a sampling time of T_s gives

$$x_{k+1} = x_k + T_s v_k cos(\psi_k + \beta_k) \tag{22}$$
$$y_{k+1} = y_k + T_s v_k sin(\psi_k + \beta_k) \tag{23}$$
$$v_{k+1} = v_k + \frac{T_s}{\tau}(v_{i,k} - v_k) \tag{24}$$
$$\psi_{k+1} = \psi_k + T_s \frac{v}{l_r} sin\beta_k \tag{25}$$

where

$$\beta_k = tan^{-1}\left(\frac{l_r}{l_r + l_f} tan\delta_{k-1}\right) \tag{26}$$

Forming the Jacobians for matrices A, B and evaluating them at time $t = k$ around the state $\psi = \phi$, $v = v_k$ and $\delta = \delta_{k-1}$ (δ_k is to be determined at time k):

$$A = \begin{bmatrix} 1 & 0 & T_s cos(\phi + \beta_k) & -T_s v_k sin(\phi + \beta_k) \\ 0 & 1 & T_s sin(\phi + \beta_k) & T_s v_k cos(\phi + \beta_k) \\ 0 & 0 & 1 - \frac{T_s}{\tau} & 0 \\ 0 & 0 & \frac{T_s}{l_r} sin(\beta_k) & 1 \end{bmatrix} \tag{27}$$

$$A = \begin{bmatrix} 1 & 0 & T_s cos\Big(\phi + tan^{-1}(l_q tan\delta_{k-1})\Big) & -T_s v_k sin\Big(\psi_k + tan^{-1}(l_q tan\delta_{k-1})\Big) \\ 0 & 1 & T_s sin\Big(\phi + tan^{-1}(l_q tan\delta_{k-1})\Big) & T_s v_k cos\Big(\psi_k + tan^{-1}(l_q tan\delta_{k-1})\Big) \\ 0 & 0 & 1 - \frac{T_s}{\tau} & 0 \\ 0 & 0 & \frac{T_s}{l_r} sin(tan^{-1}(l_q tan\delta_{k-1})) & 1 \end{bmatrix} \tag{28}$$

$$B = \begin{bmatrix} 0 & -T_s v_k sin(\phi + \beta_k) \frac{l_q}{l_q^2 sin^2\delta_{k-1} + cos^2\delta_{k-1}} \\ 0 & T_s v_k cos(\phi + \beta_k) \frac{l_q}{l_q^2 sin^2\delta_{k-1} + cos^2\delta_{k-1}} \\ \frac{T_s}{\tau} v_k & 0 \\ 0 & \frac{T_s v_k}{l_r} cos(\beta_k) \frac{l_q}{l_q^2 sin^2\delta_{k-1} + cos^2\delta_{k-1}} \end{bmatrix} \tag{29}$$

$$B = \begin{bmatrix} 0 & -T_s v_k sin\Big(\phi + tan^{-1}(l_q tan\delta_{k-1})\Big) \frac{l_q}{l_q^2 sin^2\delta_{k-1} + cos^2\delta_{k-1}} \\ 0 & T_s v_k cos\Big(\phi + tan^{-1}(l_q tan\delta_{k-1})\Big) \frac{l_q}{l_q^2 sin^2\delta_{k-1} + cos^2\delta_{k-1}} \\ \frac{T_s}{\tau} v_k & 0 \\ 0 & \frac{T_s v_k}{l_r} cos\left(tan^{-1}\Big(l_q tan\delta_{k-1}\Big)\right) \frac{l_q}{l_q^2 sin^2\delta_{k-1} + cos^2\delta_{k-1}} \end{bmatrix} \tag{30}$$

where $l_q = \frac{l_r}{l_r + l_f}$

Now we can express the linear model as

$$s_{k+1} = As_k + Bu_k \tag{31}$$

where

$$s_k = \begin{bmatrix} x_k \\ y_k \\ v_k \\ \psi_k \end{bmatrix}, u_k = \begin{bmatrix} v_{i,k} \\ \delta_k \end{bmatrix} \tag{32}$$

However, states x and v cannot be measured under our configuration, since no SLAM module is employed and no encoders are mounted on the wheels of the vehicle. Hence, the model has to be reduced, while now the velocity will be constant and set to v_0. (Hence the input throttle also needs to be excluded as an input). Nevertheless, state x needs to be included in the model even if it is not possible to measure it due to the formulation of the problem in terms of the MPC framework: the reference of the vehicle in terms of x needs to be (practical) infinity in order for it to keep moving along the lane. The new system matrices and the new states are modified as

$$A = \begin{bmatrix} 1 & 0 & -T_s v_k sin\Big(\psi_k + tan^{-1}(l_q tan\delta_{k-1})\Big) \\ 0 & 1 & T_s v_k cos\Big(\psi_k + tan^{-1}(l_q tan\delta_{k-1})\Big) \\ 0 & 0 & 1 \end{bmatrix} \tag{33}$$

$$B = \begin{bmatrix} -T_s v_k sin\Big(\phi + tan^{-1}(l_q tan\delta_{k-1})\Big)\dfrac{l_q}{l_q^2 sin^2\delta_{k-1} + cos^2\delta_{k-1}} \\ T_s v_k cos\Big(\phi + tan^{-1}(l_q tan\delta_{k-1})\Big)\dfrac{l_q}{l_q^2 sin^2\delta_{k-1} + cos^2\delta_{k-1}} \\ \dfrac{T_s v_k}{l_r} cos\left(tan^{-1}\Big(l_q tan\delta_{k-1}\Big)\right)\dfrac{l_q}{l_q^2 sin^2\delta_{k-1} + cos^2\delta_{k-1}} \end{bmatrix} \tag{34}$$

the model being

$$s_{k+1} = As_k + Bu_k, s_k = \begin{bmatrix} x_k \\ y_k \\ \psi_k \end{bmatrix}, u_k = \begin{bmatrix} \delta_k \end{bmatrix} \tag{35}$$

Stating the optimization problem

We can now form the optimization problem to be solved at time step t as

$$\text{minimize} \sum_{k=0}^{N-1} (s_k - s_{ref})^T Q (s_k - s_{ref}) + u_k^T R u_k + (s_N - s_{ref})^T Q_f x_(s_N - s_{ref}) \tag{36}$$

$$\text{subject to } s_{k+1} = As_k + Bu_k \tag{37}$$

$$\delta^{min} \leq \delta_k \leq \delta^{max} \tag{38}$$

$$s_0 = (x_t, y_t, \psi_t) \equiv (0, OC, \phi) \tag{39}$$

$$s_{ref} = (x^{max}, 0, 0) \tag{40}$$

$$Q > 0, R > 0, Q_f > 0 \tag{41}$$

2.3 Tracking the circumference of a circle using a MPC controller

2.3.1 Theory

In figure 10, the vehicle C, whose velocity is constant and denoted by v, is to track a circle whose center is O' and whose radius is $O'R$. Its orientation relative to the global coordinate system is ψ. $R(x_R, y_R)$ is the point C is to track. The orientation of R relative to the global coordinate system is ψ_R. The vehicle's coordinates are (x_c, y_c).

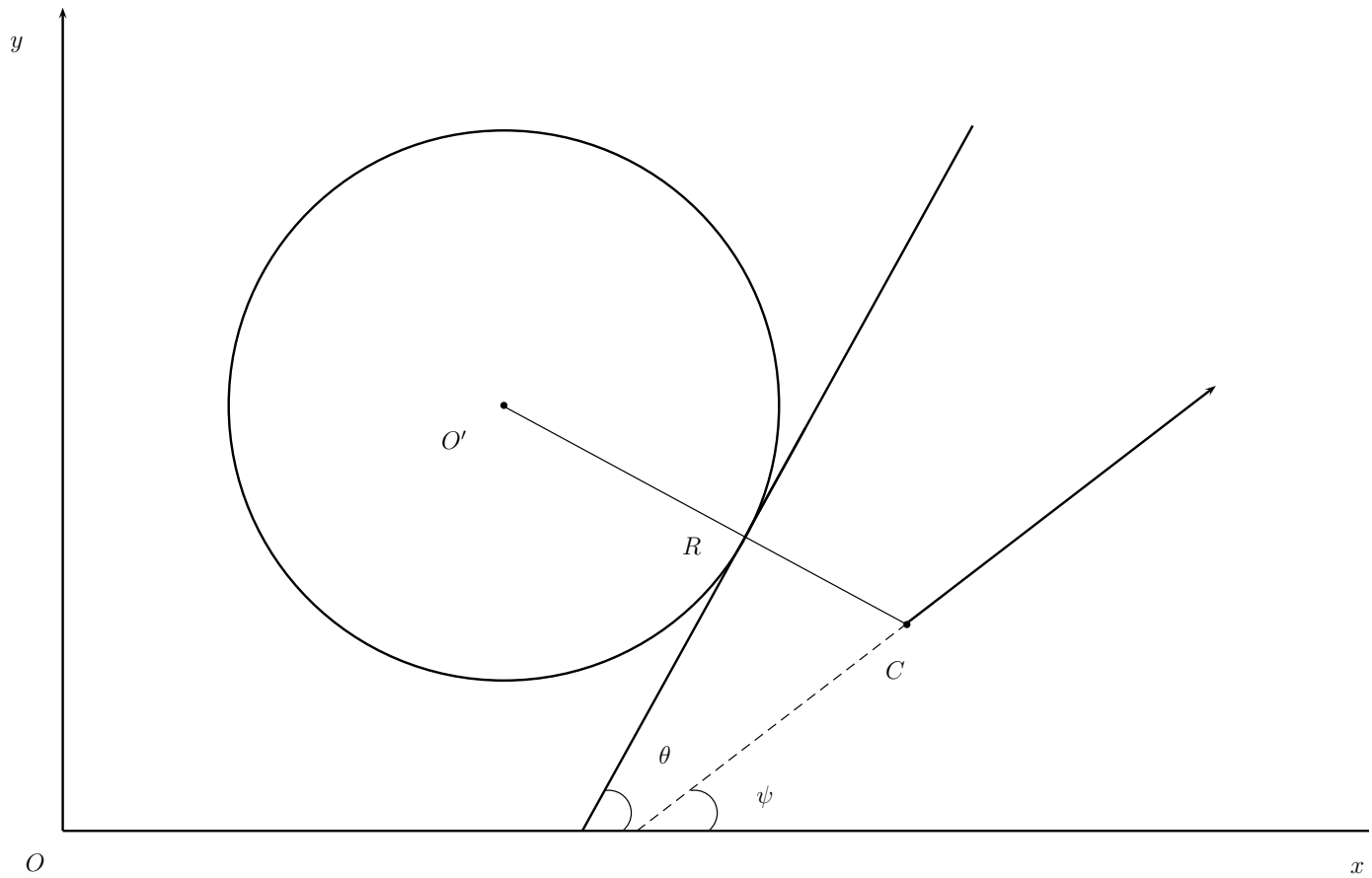

Figure 10

R is a moving reference point and its pose is found as follows. Given C and the trajectory of the circle, point R is the point with the least distance to C among all points of the trajectory. Since the circle is known a priori and comprised by a set of poses, R is known.

The aim is for the vehicle C to minimize its deviation from R, in other words we want to drive the differences

$$\begin{bmatrix} x_c - x_R \\ y_c - y_R \\ v_c - v_R \\ \psi_c - \psi_R \end{bmatrix} \to 0 \tag{42}$$

where v_c and v_R are the velocities of the vehicle and the reference point, respectively.

Obtaining the linearized kinematic model

The model constitutes the equations of motion of the vehicle, and has four states (x, y, v and ψ) and two inputs (v_i and δ). The equations of the vehicle's motion that are relevant here are

$$\dot{x} = vcos(\psi + \beta) \tag{43}$$
$$\dot{y} = vsin(\psi + \beta) \tag{44}$$
$$\dot{v} = \frac{v_i - v}{\tau} \tag{45}$$
$$\dot{\psi} = \frac{v}{l_r} sin\beta \tag{46}$$

Sampling with a sampling time of T_s gives

$$x_{k+1} = x_k + T_s v_k cos(\psi_k + \beta_k) \tag{47}$$
$$y_{k+1} = y_k + T_s v_k sin(\psi_k + \beta_k) \tag{48}$$
$$v_{k+1} = v_k + \frac{T_s}{\tau}(v_{i,k} - v_k) \tag{49}$$
$$\psi_{k+1} = \psi_k + T_s \frac{v}{l_r} sin\beta_k \tag{50}$$

where

$$\beta_k = tan^{-1}\left(\frac{l_r}{l_r + l_f} tan\delta_{k-1}\right) \tag{51}$$

Forming the Jacobians for matrices A, B and evaluating them at time $t = k$ around the current state $\psi = \psi_k$, $v = v_k$ and $\delta = \delta_{k-1}$ (δ_k is to be determined at time k):

$$A = \begin{bmatrix} 1 & 0 & T_s cos(\psi_k + \beta_k) & -T_s v_k sin(\psi_k + \beta_k) \\ 0 & 1 & T_s sin(\psi_k + \beta_k) & T_s v_k cos(\psi_k + \beta_k) \\ 0 & 0 & 1 - \frac{T_s}{\tau} & 0 \\ 0 & 0 & \frac{T_s}{l_r} sin(\beta_k) & 1 \end{bmatrix} \tag{52}$$

$$A = \begin{bmatrix} 1 & 0 & T_s cos\Big(\psi_k + tan^{-1}(l_q tan\delta_{k-1})\Big) & -T_s v_k sin\Big(\psi_k + tan^{-1}(l_q tan\delta_{k-1})\Big) \\ 0 & 1 & T_s sin\Big(\psi_k + tan^{-1}(l_q tan\delta_{k-1})\Big) & T_s v_k cos\Big(\psi_k + tan^{-1}(l_q tan\delta_{k-1})\Big) \\ 0 & 0 & 1 - \dfrac{T_s}{\tau} & 0 \\ 0 & 0 & \dfrac{T_s}{l_r} sin(tan^{-1}(l_q tan\delta_{k-1})) & 1 \end{bmatrix} \tag{53}$$

$$B = \begin{bmatrix} 0 & -T_s v_k sin(\psi_k + \beta_k)\dfrac{l_q}{l_q^2 sin^2\delta_{k-1} + cos^2\delta_{k-1}} \\ 0 & T_s v_k cos(\psi_k + \beta_k)\dfrac{l_q}{l_q^2 sin^2\delta_{k-1} + cos^2\delta_{k-1}} \\ \dfrac{T_s}{\tau} v_k & 0 \\ 0 & \dfrac{T_s v_k}{l_r} cos(\beta_k)\dfrac{l_q}{l_q^2 sin^2\delta_{k-1} + cos^2\delta_{k-1}} \end{bmatrix} \tag{54}$$

$$B = \begin{bmatrix} 0 & -T_s v_k sin\Big(\psi_k + tan^{-1}(l_q tan\delta_{k-1})\Big)\dfrac{l_q}{l_q^2 sin^2\delta_{k-1} + cos^2\delta_{k-1}} \\ 0 & T_s v_k cos\Big(\psi_k + tan^{-1}(l_q tan\delta_{k-1})\Big)\dfrac{l_q}{l_q^2 sin^2\delta_{k-1} + cos^2\delta_{k-1}} \\ \dfrac{T_s}{\tau} v_k & 0 \\ 0 & \dfrac{T_s v_k}{l_r} cos\left(tan^{-1}\Big(l_q tan\delta_{k-1}\Big)\right)\dfrac{l_q}{l_q^2 sin^2\delta_{k-1} + cos^2\delta_{k-1}} \end{bmatrix} \tag{55}$$

where $l_q = \dfrac{l_r}{l_r + l_f}$

Now we can express the linear model as

$$s_{k+1} = As_k + Bu_k \tag{56}$$

where

$$s_k = \begin{bmatrix} x_k \\ y_k \\ v_k \\ \psi_k \end{bmatrix} \tag{57}$$

and

$$u_k = \begin{bmatrix} v_{i,k} \\ \delta_k \end{bmatrix} \tag{58}$$

Stating the optimization problem

We can now form the optimization problem to be solved at time t as

$$\text{minimize} \sum_{k=0}^{N} (s_k - s_{ref})^T Q (s_k - s_{ref}) + u_k^T R u_k \tag{59}$$

$$\text{subject to } s_{k+1} = As_k + Bu_k, \text{ where } s_k = [x_k, y_k, v_k, \psi_k]^T, u_k = [v_{i,k}, \delta_k]^T \tag{60}$$

$$u_i^{min} \leq u_{i,k} \leq u_i^{max} \tag{61}$$

$$\delta^{min} \leq \delta_k \leq \delta^{max} \tag{62}$$

$$s_{ref} = (x_R, y_R, v_R, \psi_R) \tag{63}$$

$$s_0 = (x_t, y_t, v_t, \psi_t) \tag{64}$$

2.3.2 Simulation

The prototyping is being done in matlab. Figure 11 shows the reference trajectory in blue and the trajectory of the vehicle in red. Figure 12 shows the reference velocity of the vehicle in blue and the velocity of the vehicle in red.

These results act purely as a proof of concept. Tuning of the weights on the states and the inputs is not an easy task, and it will have to be performed primarily experimentally.

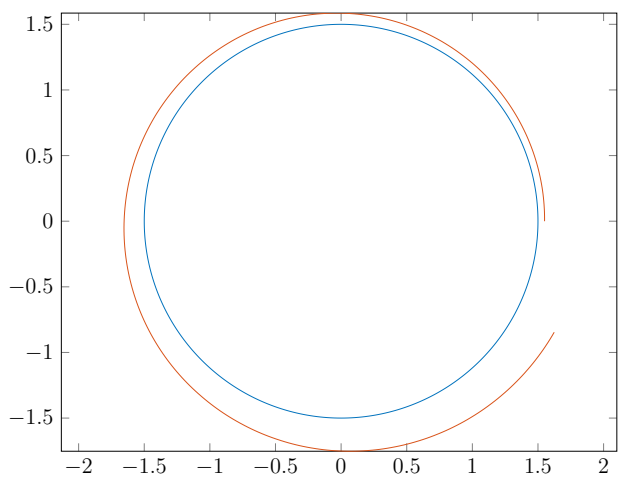

Figure 11

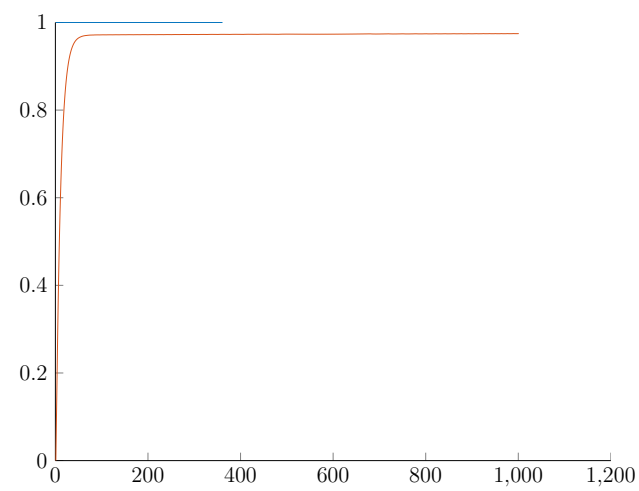

Figure 12

3 Issues

4 To do

5 Misc.

The progress of the project can be observed in `trello` and `github`:

- `https://trello.com/b/uEP0jl0B/slip-control`

- https://gits-15.sys.kth.se/alefil/HT16_P2_EL2425
- https://gits-15.sys.kth.se/alefil/HT16_P2_EL2425_resources