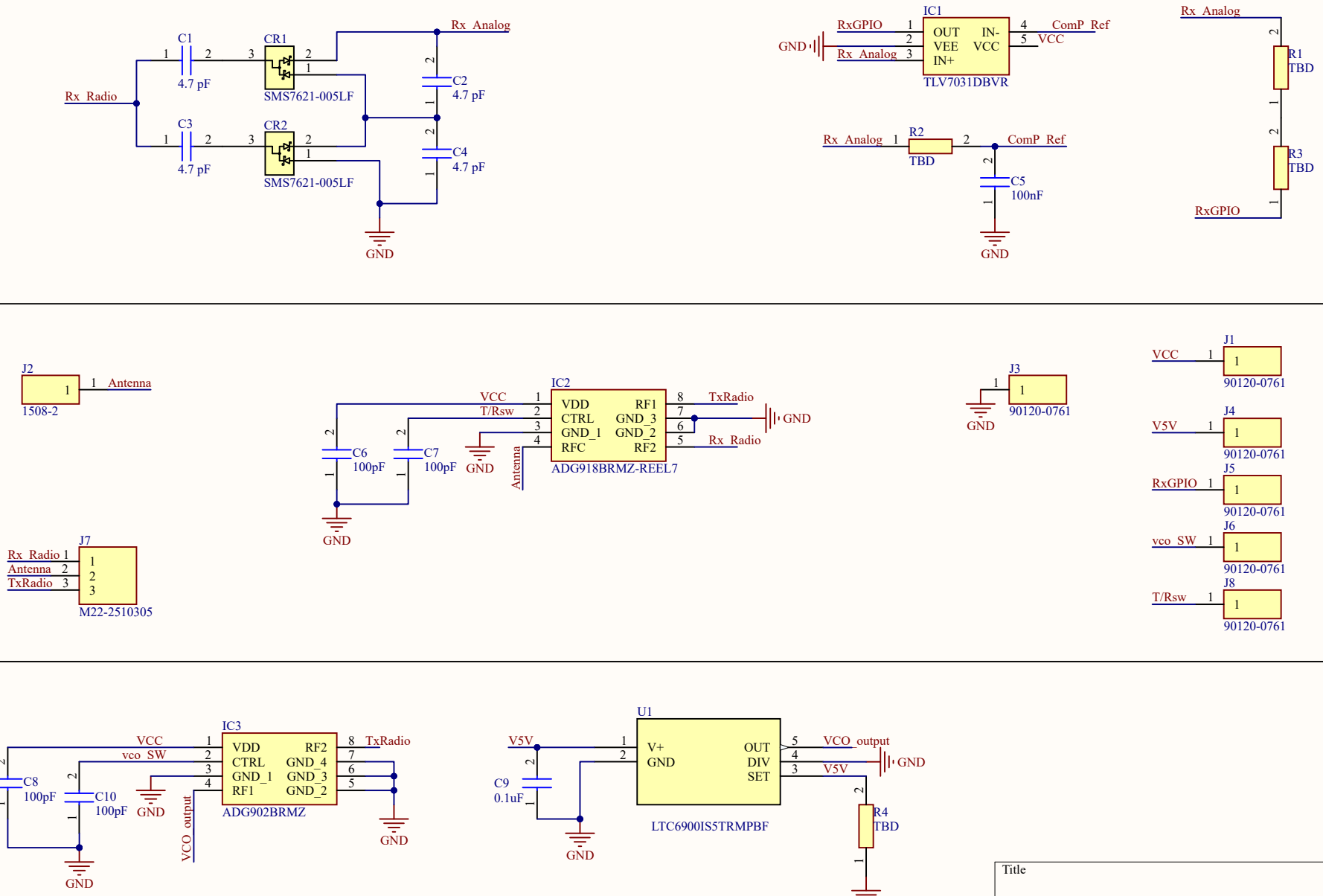

Title		
Size A4	Number	Revision
Date: 6/12/2024	Sheet of	
File: D:\Mengyao_Liu2024\..\BodyCalInv0.1.SchDoc	Drawn By:	